目　录

一、机器简介
二　技术规格及用途
三、机器安装和操作准备
　1、机器安装
　(1)油盘安装
　(2)机头安装
　(3)膝控部件的安装
　(4)电动机安装
　(5)绕线器安装
　(6)线架安装
　2、操作准备
　(1)揩擦机器
　(2)检查
　(3)润滑
　(4)试车
四、机器的操作
　1、缝线的选择
　2、机针缝线和缝料的配合
　3、机针安装
　4、绕梭心线
　5、穿面线和引底线
　6、装梭心
　7、装卸梭心套
　8、针距的调节
　9、压脚压力的调节
　10、绣花机绣花前准备工作
五、缝线的张力
　1、底线张力的调节
　2、面线张力的调节
六、机器的定位与调整
　1、横针针迹对称位置的调节
　2、旋梭定位
　3、针杆高度
　4、旋梭的装卸
七、一般故障及其处理方法
八、零件样本

CONTENTS

Ⅰ. Brief Introduction of the Machine
Ⅱ. Main Technical Speoifications and Application
Ⅲ. Installation and preparation for operation
　1. Installation
　(1) Fixing of oil Disk
　(2) Installation of Machine Head
　(3) Installation of Knee-Control Component
　(4) Installation of Motor
　(5) Installation fo Winder
　(6) Assemblage of Thread Rack
　2. Preparation for Operation
　(1) Cleaning the Macine
　(2) Indpection
　(3) Lubrication
　(4) Test Run
Ⅳ. How to Operate
　1. Selection of Stitches
　2. Coordination of Needles, Thread and Material
　3. Assemblage of Needle
　4. Winding Thread around the Shuttle Core
　5. Threading Surface & Bottom stitches
　6. Mounting of Shutte Core
　7. Mounting and Dismounting of the Case
　8. Adjustment of Needle distance
　9. Adjustment of pressure of presser Foot
　10. Preparations before Embroidery Embroidery Machine--
Ⅴ. Tension of Stitches
　1. Adjustment of Bottom-stitch Tension
　2. Adjustment of Surface-stitch Tension
Ⅵ. Location and Regulation of the Machine
　1. Regulation of Symmetrical Positions of Horizontal
　2. Location of Rotating Shuttle
　3. Height of Needle Staff
　4. Mounting and Dismounfing of Rotating shuttle.
Ⅶ. Faults Locating & How to Treat
Ⅷ. Examples of Components

一、机　器　简　介

曲折缝缝纫机系列产品是多品种锁式曲形线迹工业用刺绣机器。

本系列机种用于绣品、服装、巾被、鞋帽、手套皮件、箱包等行业，被广泛应用在薄、中厚料上作直形、曲形或多点式曲形缝纫。

本机结构采用连杆挑线，旋梭勾线，针杆摆动，差动齿轮勾线，倒顺针机构，并设有膝提机构。具有运转平稳、操作灵活、维修方便、线迹美观整齐等特点。

I. BRIEF INRTODUCTION OF THE MACHINE

Series products of Curved-stitching Sewing machine are multi-purposed, locked-type and curved stitching mechanism for industrial embroidery.

This series of machines can be used in the trades of embroidery, garment, beddings, shoes and hats, gloves and leather pieces and luggage. It can also be extensively applied to the material with thin or medium thickenss for lirear, curvilinear or multi-point curved sewing.

The machine is designed as a structure which can be expected to stitch-up or prick with connecting-levers, to crochet with shuttles or differential gears, and provided with swaying needle - staff, clockwise and counter-clockwise units and kneeing device. The machine features in smooth running, flexible operation, convenient mainterance as well as neat and beautiful stitches.

二、 技术规格及用途

II、Main Technical Specifications and Application

名称 Description			曲折缝 Curved-stitching	绣花机 Embroidery machine	双针曲折缝 Double Curved-stitching
最高缝速 Max. Speed	直形缝		2000针/分 2000 stitches/min		
	曲形缝 Curvilinear	横针距1～5毫米 Horizontal needle distance 1～5 mm	1700针/分 1700 stitches/min		
		横针距5～12毫米 Horizontal needle distance 5～12 mm	1200针/分 1200 stitches/min		
最大线迹长度 Max. length of stitches		直形线迹 Linear	5毫米 5 mm		5毫米 5 mm
		曲形线迹 Curvilinear	12毫米 12 mm	10毫米 10 mm	6毫米(指单针摆动宽度) 6mm (Swaying width of Single needle)
双针间距 Distance between double stitches					2.5, 3.5, 4.5 (可换) 2.5, 3.5, 4.5(Changeable)
压脚提升高度 Height of presser foot		手提 Hand stitch	不低于6毫米 no less than 6mm		不小于6毫米 no less than 6mm
		膝提 Kneeing stitch	12毫米 12 cm		12毫米 12 cm
最大缝纫厚度 Max. thickness of sewing			不少于8层纱卡 no less than 8 layers		不少于8层纱卡 no less than 8 layers
机针规格 Specification of needle			DPX5 (Nm 70～130)		
缝线 Thread			No.40-100涤棉线或类似丝线 No. 40～100 terylene and the like	绣花线或类似的丝线、棉线 Embroidery thread and the like	No.40-100涤棉线或类似丝线 No. 40～100 terylene and the like
机头体积 (长×宽×高) Dimension of machine head (L X W X H)			450×180×320毫米 450X180X320 mm		
电动机功率 Motor Power			0.37千瓦 0.37 KW		
用途 Application			粗缝、拼缝、套结缝及一般Z字形缝 For rough stitching loop stitching and z-shape stitching	各种图案、花型及商标的刺绣 For embroidering various patterns designs and trade marks	双针条状及曲折装饰缝 For double stitching and curved-stitches decorations

三、 机器安装和操作准备

1、机器安装

(1)油盘安装:

见图一，用四只圆钉2将油盘1固定在台板框孔内，并确保油盘至台板面距离为25毫米，油盘右边缘与台板右框边平齐。

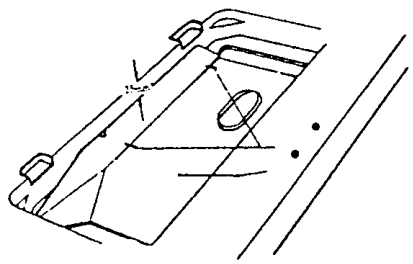

图一 Figurel 1

(2)机头安装: (见图二)

机头在安装时，首先将机头连接勾座1和机头座垫2用铁钉固定在相应位置，安装四只橡皮座垫3时，一定要使铁钉全部埋入橡皮圈内。然后将机头装上连接勾放在台板上，并注意转动要灵活，四角要平稳。

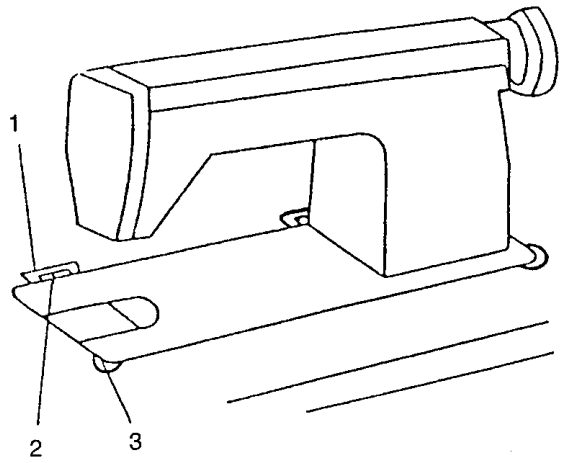

图二 Figurel 2

(3)膝控部件的安装:

按图三进行安装，并注意转动要灵活。

①膝碰块1的位置根据操作者的情况进行调节，以保证操作方便。

②调节件2的位置，当件2控制件3运动时，则膝部可以来控制机针的摆动; 当件2控制件4时，则膝部可以控制压脚的提升。

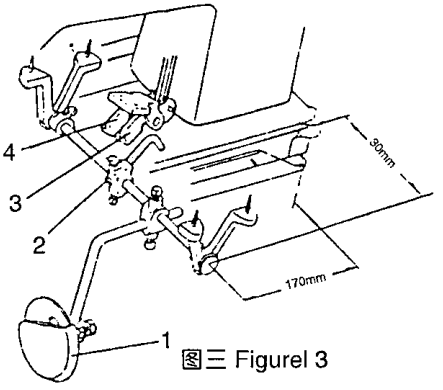

图三 Figurel 3

(4)电动机安装: (见图四)

①将电机1左右移动，使缝级机主动轮件3与电动皮带轮件2 的位置调整成一直线即可。

②缝级机运转方向， 从机头主动轮外侧看，应是逆时针方向。电动机的转向应一致。电动机转向可用电动上的电源插头换转 180 ° 调整转向。

③O型皮带4的张力调整，旋松螺母5，转动电动机调节皮带张力。皮带张力的大小可用手指将皮带按下，使皮带如图示弯曲成12-20毫米程度即可。

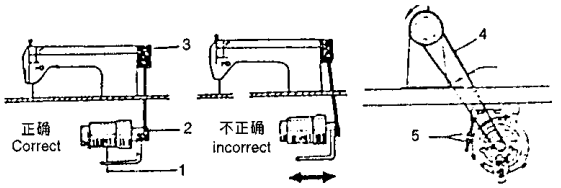

图四 Figurel 4

(5)绕线器的安装:

安装好机头，套上皮带后就可以着手装绕线器。安装绕线器时应将绕线轮1 (见图五) 对准皮带2的外边， 并使绕线轮和皮带之间有一定的空隙。但在揿下绕线轮架3时应能使绕线轮和皮带相互接触，上轮转动时，皮带能带动绕

线轮一起转动。然后拧紧木螺钉4将绕线器固定在台板上。

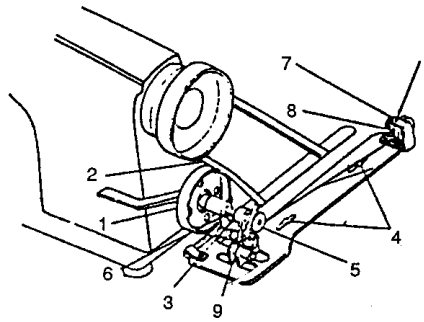

图五 Figure 5

(6)线架安装:

线架的装配位置如图六所示，线架1应放在台板右角，然后放倒机头，机头碰不上线架，即可拧紧木螺钉2。

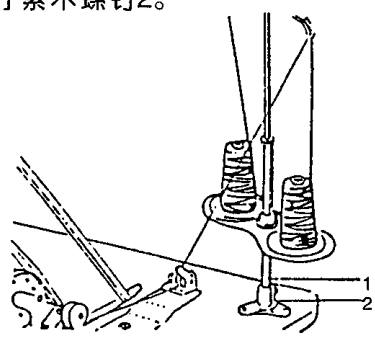

图六 Figure 6

2、操作准备

(1)揩擦机器:

机头装箱前为了防止机件生锈，各部分均涂有防锈油脂，同时机头装箱后，还可能在贮藏和长途运输阶段造成油脂硬化和灰尘在机器表面积聚，所以必须将表面的油脂和灰尘用汽油和洁净的软布揩擦干净。

(2)检查:

机器出厂后，在长途运输中有可能受到强烈的振动而使机件松动或变形，所以在清洗油污以后，应该作一次周密的检查，并用手转动主动轮，看机件之间有无转动困难，碰撞现象或其它不均匀的阻力，不正常的声响，如有应作适当的调整，调至机器运转正常后才可正式试车。

(3)润滑:

机器运转之前，用软布揩擦干净之后，对所有运转和滑动部份和图七中箭头所指油孔都应充分加油。

如果机器是连续使用的，应该每天加油数次。

必须使用2号缝纫机白油或HJ-7机械油。

(4)试车:

新机器第一次使用和长期搁置未用重新使用时，应先进行空载运转。此时特别注意：上轮转向应是逆时针(从上轮的外侧面来看)，并将压脚提升，开始时应低速运转，如运转正常，则逐步提高到2000转/分。数分钟后再检查各部份零件磨损情况，直到机器情况正常时才正式使用。

III INSTALLATION AND PREPARATION FOR OPERATION

1.Installation

(1) Fixing of oil Disk

Fix the oil disk (1)with 4 pins (2) onto the frame openings of the plate. Make sure the distance between the oil disk and the plate surface is equal to 25 mm. The right side of the oil disk should be kept in line with the right frame of the plate (see Fiqure 1)

(2) Installation of machine head (see Figure 2)

In Installation, the base of connecting hook (1) and the pad (2) should be firstly fastened firmly at a proper place with the metal nails when the 4 rubber pads (3) are being fixed, make sure the metal nails should be embeded entirely into the rubber washer. Then the machine head can be installed on the plate with connecting hooks. Attention should be attached to flexible movement and the 4 angles being flat and stable.

(3) Installation of knee-control component

The installation of this component should be conducted according to the Fiqure 3, and much importance be attached to the flexibility of operation.

① The location of the knee-control block 1 ought to be adjusted in accordance with the operator's working condition to eusure convenience in operation.

② How to locate the adjuster 2: When adjuster 2 is aimed to control the movement of part 3 the knee component can be used to control the swaying of the needle. When the adjuster 2 is aimed to control the movement of part 4, the knee component can be used to control the upraising of presser foot.

(4) Installation of motor (see Figure 4)

①Turn the motor 1 from side to side in a bid to ensure the driving wheel of the sewing machine 3 being in line with the pulley of the motor 2.

②How to regulate the running direction: Viewed from the outside of the driving wheel, the running direction should be counter-Clockwise. Make sure that the turning of the motor should be in uniform and regular direction which can be regulated by the power plug on the motor wiht change of 180°

③How to regulate the tension of O-shaped Belt 4.

Release the Nut 5, and turn the motor so that the Belt tension can be regulated. If press down the belt with your fingers and bend it over to 12–20 mm as shown in Figue 4, the tension is considered as ideal one.

(5) Installation of winder

After the machine head and the belt have been fixed, it's the time to install the winder. To start with , aim the winding wheel 1 at the outside of the Belt 2 preciseiy, and leave over a space between 1 and 2 (see Figure 5) The stand of winding wheel 3 is pushed down in such a way that the winding wheel could be in contact with the belt mutually. As the upper wheel is turning , the belt can be expected to cause the winding wheel rotating together . In the end, the wooden screw 4 should be tightened so as to fix the winder firmly on the plate.

(6) Assemblage of thread Rack

The assemblage of thread rack is shown as in Fiqure 6. The rack should be placed at the tight corner of the plate, then push down the machine head in such a way that it won't be in touch with the rack.

then tighten firmly the wooden screw 2.

2. Preparation for Operation

(1) Cleaning the machine

Before shipping, every part of the machine head is always coated with antirust grease in a bid to prevent the components from being rusted. After shipping, the applied grease might be hardened during the long-distance transportation or in storage, and particles and dust accumulated on the surface of the machine. And thus all the hardened grease particles and dust should be wiped clean with gasoilne and soft cloth.

(2) Inspection

After leaving factory, the machine is possibly subject to violent vibration during the longdistance transportation so that the componenits could be loosened or deformed. A close and comprehensive inspection is needed when all the oily stain has been wiped clean. Turn the driving wheel manually to see if there is any difficulty in turning of the components, any bump or obstruction, or any abnormal sounds. If any, the affected components should be adjusted until the machine is capable of running regularly.

(3) Lubrication

After the machine being wiped clean but before operating all the turning and movable parts and the oil holes which the arrows indicate as in Figure 7 should be fully lubricated.

When the machine is needed to run continuously, lubrication showld be made several times each day.

No. 2 white lubricant or HJ-7 mechanical oil is preferentially used.

(4) Test run

When a new machine is operated at the first time or a machine is newly used after a long time of laying off, the machine showld be made idle-running, What is more important at the moment is that the running direction of upper wheel should be counter-clockwise (viewed from the outside of the wheel) and the presser foot raised. At the beginning, the running should be at low speed, and could be gradually increaded to 2000r/m when it comes to normal state A few.

minutes later, it is necessary to rexamine any sign of wear and tear about the components until the machine can be operated normally.

四、机器的操作

1、缝线的选择

面线应采用左旋线。底线则左、右旋线均可使用。

缝线旋向的鉴别，可按图八所示把缝线握住，以右手按图箭头方向搓转缝线。若线股越搓越紧，则是左旋线。反之即为右旋线。

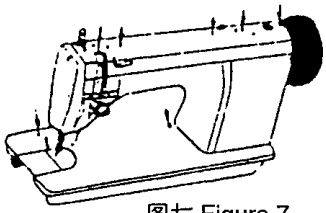

图七 Figure 7

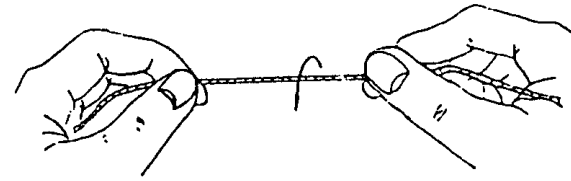

图八 Figure 8

2、机针缝线和缝料的配合

请使用DP×5机针，机针号数根据使用的缝料、缝线参考下表进行选择。

机针号码 Neadle Number	缝线的种类及号码 Number, Kind of thread			缝料种类 Kind of material
DPX5	棉线 Cotton	丝线 Silk	尼龙 Nylon	
65～75(9#～11#)	80～150	24～30	3～56	乔其纱、薄麻布、手帕、绸缎绣花 Georgette, gunny, mapkin, embroidered-Satin
75～90(11#～14#)	60～80	——	——	服装卡其、薄呢绒、绣字、绣花 Khaki, woolen fabric embroidery
90～100(14#～16#)	40～60	16～18	——	绒布、全毛哔叽厚、绸缎上绣花、手套上绣花 Cotton flannel, woolen serge, embroidered satin and gloves
100～130(16#～22#)	30～40	21～60	20～40	人造革、鞋、帽、拎包、皮件上绣花 Artificial leather, shoes and hats, suit-case embroidered leather - piece

参考上表按所缝布料选择合适的机针。

＊如使用特殊缝线如金银丝，请使用大号的机针(14#-16#)以缝出满意的针迹。

＊If specific thread (gold-or-silver thread) is used, large-size needles(14#-16#) are needed for satisfying stitches.

3、机针安装

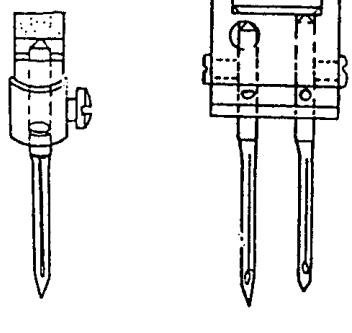

a 图九 Figure 9 b

见图九，机针安装时一定要使针孔及机针长槽面向操作者， 机针尾部一定要插到孔底，然后拧紧支头螺钉。

4、绕梭心线:

把梭心5 (图五) 插入绕线器轴 6的顶端上。自线团来的线， 先穿入过线架7的线孔中， 再夹入二块夹线板8的中间， 然后把线头在梭心上绕上几圈， 把满线跳板9向下揿压，绕线轮1即压向皮带， 在缝纫过程中， 就能自动绕线。梭心绕满后能自动跳开并停止绕线。

梭心线应排列整齐而紧密。 如松浮不紧，

可以加大夹线板8的压力；如排列不齐，则要移动过线架7的位置进行调整。调整时，先松开紧固螺钉，然后左右移动过线架，使之能自动排列整齐后再紧固之。梭心线不要绕得过满，否则容易散落。一般绕到小于梭心外径0.5-1毫米。绕线量，可以用满线跳板的螺钉加以调节。

5、穿面线和引底线

穿面线时针杆应在最高位置，然后从线架上引出线头，曲折缝、绣花机按图十a所示将线头依次穿过1-13，最后穿过机针孔14，并引出100毫米左右的线备用。双针曲折缝按图十b穿面线。

引底线时，先将面线线头捏住转动主动轮，使针杆向下运动，再回升到最高位置，然后拉起捏住的面线线头，底线即被牵引上来，最后把底、面二根线头一起置于压脚下前方。

6、装梭心(见图十一)

(1)梭心装入梭心套，将线从长槽①及压线簧②下拉出。

(2)将线拉出压线簧末端的孔③

(3)把线穿过过线孔④留出60毫米长的线头。

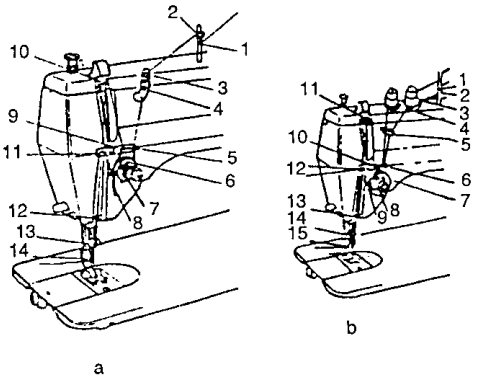

图十 Figure 10

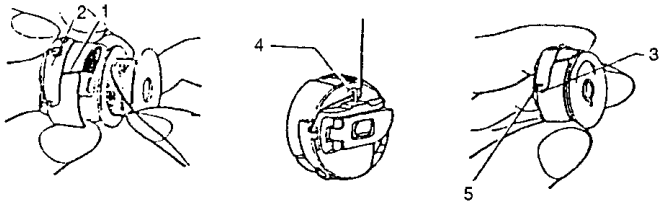

图十一 Figure 11

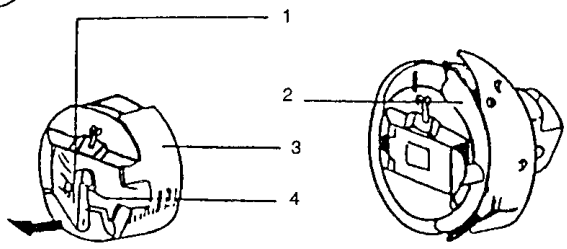

图十二 Figure 12

注意：牵拉线5时，梭心顺时针方向转动是正确的；若是逆时针方向转动，应把梭心翻个面重装。

7、装卸梭心套(见图十二)

装梭心套的时候，机针应该在最高位置。先拉开梭门盖1之后把梭心套3照图十二所示放入旋梭2中。放入时请注意梭心套与旋梭心轴上的定位槽相扣合。

卸梭心套时，必须将梭门盖向外扳开并且扳足，之后捏着扳开的梭门盖徐徐地取下梭心套，如此才能使梭心套勾住梭心，不让梭心脱落。

8、针距的调节

如图十三所示，件1为横针距扳手，调节横向针距大小；件3为横针距锁紧螺钉，工作时必须锁紧；件2为直针距调节旋钮，可以调节直向针距的大小。

9、压脚压力的调节(见图十四)

压脚的压力，要根据缝料的厚度加以调节。如缝级厚料，应加大压脚压力，这时将机头顶部的调压螺钉按图十四（a）所示箭头方向转动；反之，缝级薄料时，可按图十四(b)所示的方向，转动调压螺钉，以减少压脚的压力。

压脚的压力，应以能正常推送缝料为宜，应尽量减轻一些。

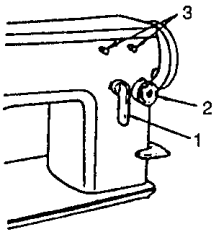

图十三 Figure 13

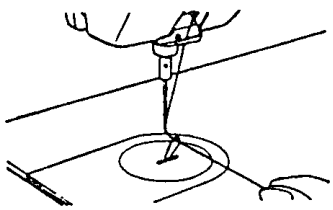

图十五 Figure 15

10、绣花机绣花前准备工作

(1)用左手捏紧面线线头，用手朝自己方向转动带轮，使底线从针板孔中拉出。(如图十五)

(2)确保内外绷格将缝料绷紧，否则引起跳针，断线及缝料皱缩。

(3)将绷格放至机针下，用左手指把面线线头压紧在缝料上，开始从你所需起缝的地方缝制绣花。(如图十六)

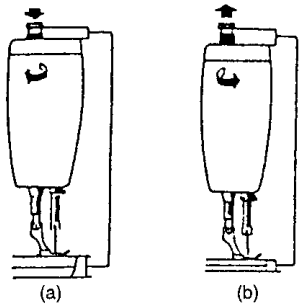

图十四 Figure 14

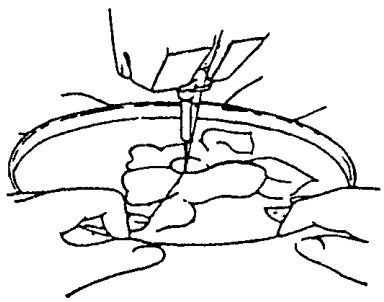

图十六 Figure 16

IV . HOW TO OPERATE

1.Selection of stitches

Left-handed rotation stitches can only be applied to the surface, while either left-handed or right-handed rotation stitches can be applied to the bottom.

The rotational direction of stitches can be identified according to the indication shown in Figure 8. Hold the stitch with both hands and then twist it by the right hand and in the direction as the arrow shows. If the more it twists, the tighter it becomes, undoubtedly it should be left-handed rotation stitch. Otherwise it is right-handed one.

2. coordination of Needle. Thread and material

DP X 5 needle is chosen in preference. The number of needle can be selected in line with the material and thread used. (see the following Table)

Decent needles can be selected in accordance with the material listed in the above Table.

3. Assemblage of Needle

When assembling, make sure that the needle hole and its long slot should face the operator with the rear part of nedle inserted deep into the hole bottom, Then tighten firmy the set screw,

4. Winding thread around the shuttle core

Set the shutle core 5 (Figure 5) on the top of the winder 6. The thread drawn from the reel is made to run through the hole of the thread conveying rack 7, and then clamped into the middle place between the both thread-holding plates. Besides, the end of thread is made to go around the shuttle core for several circles. When the full thread-spring board 9 is pushed down, the winding wheel 1 will press toward the belt, As a result, automatic winding of the thread can be effected during sewing. If the shuttle core is found full of thread it will leap off automatically and come to stop.

The thread around the shuttle core should be arranged neat and compact. If too loose or relax, the pressure of the threed-holding plate should be strengthened; if being in uneven arrangement, it can be adjusted by changing the position of the thread-conveying rack 7. When adjusted, release the set screw, turn the thread-conveying rack from left to right until the thread arrangement is satisfactory, and then fix it . The thread around the shuttle core should not be wound too full. As the winding volume comes to equal the external diameter of the shuttle core with less than 0.5~1mm, that is quite enough. The volume can be regulated with the screw on the full-thread spring board.

5. Threading surface and Bottom stitches

When threading the surface stitches, the needle staff should be at the top position. The end is led from the thread rack, curved stitchings and embroidery machine are made to run through 1-13 as shown in Figure 10a, and then through the needle hole 14, meanwhile a length of 100mm should be drawn out for spare thread. The threading surface stitches of double curved stitches should be made as shown in Figure 10b.

When threading the bottom stitches , firstly hold the end of surface stitch, then turn the driving wheel to. make the needle staff run downward and immediately back to the top position. Pull up the end of surface stitch, resulting in drawing the bottom stitch upward. Finally, both ends of the surface stitch and the bottom stitch are set to the front of presser foot altogether.

6. Mounting of shuttle core (see Figure 11)

(1) Mount the shuttle core onto the case and pull out the thread from the long slot 1 and thread-pressing spring.

(2) Pull the thread out of the end hole 3 of the thread pressing spring;

(3) Run the thread through the thread-conveying hole 4 and leave aside the end about 60mm.

Note: When drawing the thread end, it's normal for the shuttle core to turn clockwise; if not in this case (or counter clocwise) the shuttle core should be remounted after turning over its side.

7. Mounting and Dismounting of the case (of the shuttle core)

When mounting the case, the needle should be at the top position. Pull apart the front cover 1 of the shuttle and set the case 3 into the rotation shuttle according to the indication shown in Figure 12, but it should be noted that the case and the locating groove of the shuttle shaft could be engaged in a good state.

When dismounting. pull the cover outward till to the full stop, then hold it firmly and gradually

take down the case so that the case could be expected to hook up the core which won't be disengaged.

8. Adjustment of needle distance

As shown in Figure 13:1 represents the spanner for adjusting the horizontal needle distance;③ represents the locking during operation; 2 represents the knob for adjusting the vertical needle distance.

9. Adjustment of the pressure of presser foot

The pressure of presser foot should be adjusted in accordance with the thickness of the material.

In case of sewing the thick material, the pressure should be increased when the screw for pressure-adjusting on the top of machine head should be turned according to the arrow shown in Figure 14 (a). Instead, in case of sewing the thin material. the screw should be turned according to the arrow shown in figure 14 (b), in a bid to reduce the pressure of presser foot.

The adjustment of pressure depends on the fact that the feeding of material can be conducted regularly. In general, there may be a moderate pressure rather than a big one.

10. preparations before Embroidery

Embroidery macine

(1) Grasp the end of surface thread with left hand and turn the belt pulley manually toward the operator so as to lead the bottom thread out of the hole in the needle plate (shown in Figure 15)

(2) Make sure to stretch the material tautly with intemal and external embroidery frames so as to prevent from skipping. breaking or making crease to the material.

(3) Put the embroidery frame under the needle, meanwhile press the end of surface thread against the material with your left-hand fingers and start to sew and embroider from the section wherever you need to start.

五、 缝 线 的 张 力

调整面线张力与底线张力到最佳位置，如图十七，使面线线图出现在缝料反面， 底线的宽度保持均匀，其宽为总宽度的1/3左右。

1、底线张力的调节

如图十八， 旋动底线张力螺钉1调节底线张力。手持线头，悬起梭心套，梭心套能以自身重量从线上徐徐滑下。 此时底线张力为适宜。

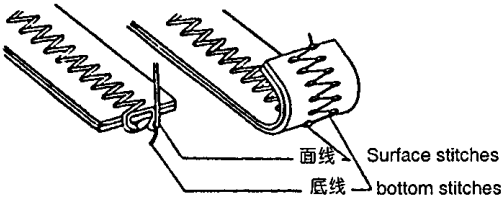

图十七 Figure 17

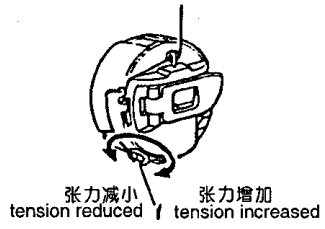

图十八 Figure 18

2、面线张力的调节

如图十九，旋动面线张力螺母2调节面线张力，或旋松夹线器紧定螺钉，旋动螺钉3来调节挑线簧4的位置来调节面线张力。使面线线环在缝料反面露出，使底线的宽度一致。

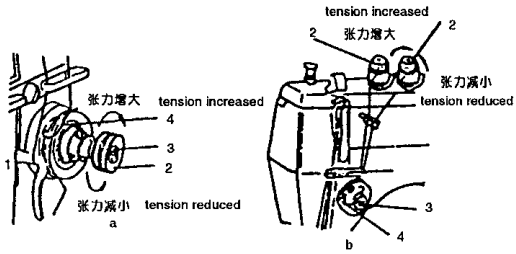

图十九 Figure 19

Ⅴ. TENSION OF STITCHES

Adjust the tension of surface stitches and of the bottom stitches to the best extent (see Figure 17) so that the coil of surface stitches could be produced on the back side of the material and the width of the bottom stitches could be maintained uniform with the width accounting for 1/3 of the totel width.

1. Adjustment of Bottom stitch Tension

In the light of indication shown in Figure 18, turn the screw 1 for adjusting the tension of bottom stitches. Hold the end in your hand and suspend the case of shuttle core upward Then the case will slide down on its own weight, which shows that the tension of bottom stitches has reached the best extent.

2. Adjustment of the surface stitch Tension

In the light of indication shown in Figure 19, turn the nuts for adjusting the tension of the surface stitches. Alternatively, release the set screw on the thread-holder, then turn screw 3 for adjusting the position of stitch spring 4, aiming at regulating the tension of surface stitches. As a re sult, the width of bottom stitches could be maintiained uniform.

六、机器的定位与调整

1、横针针迹对称位置调节

如图二十所示， 当机针行程在动作的开始和动作的结束时， 如果针行程左右运动的高度不相等，就会出现跳针现象，同时，针也会将布扯破，这样就不会绣出好产品。

要想获得正确协调的运动位置，应拆除上盖，松开上轴上的螺旋齿轮支头螺钉，轻轻地拨动齿累，注视针迹，将机针的运动调至协调位置，拧紧支头螺钉。

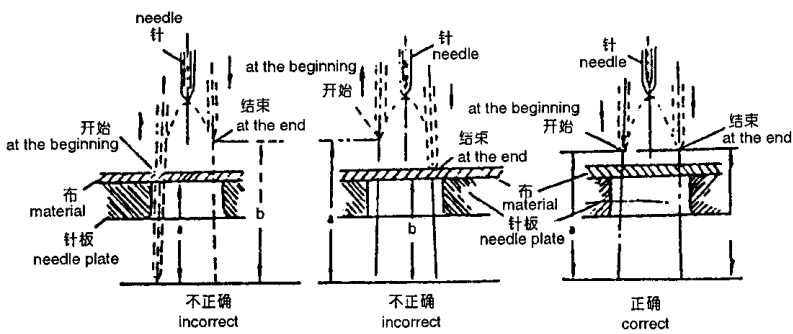

图二十 Figure 20

2、旋梭定位

①将摆针宽度固定在零位上，用手朝自己方向转动带轮， 使机针(双针曲折缝指右边的机针，下同)从下极限上升2.2毫米， 此时旋梭尖应在机针中心线上(图二十一)

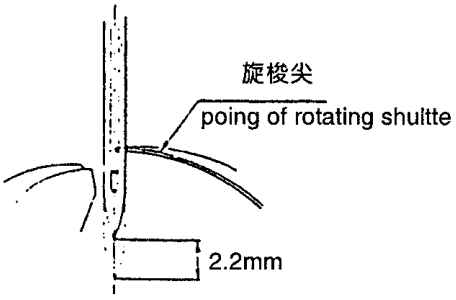

图二十一 Figure 21

②如需调整，可旋松旋梭固定螺钉，将旋梭尖对至机针中心线上， 此时机针小缺口和旋梭之间隙约为0.05-0.1毫米(图二十二)

3、针杆高度

①调节摆针宽度到最大，用手朝自己方向转动带轮，使机针位于左面位置， 旋梭尖在机针中心， 此时机针孔上沿至旋梭尖尺寸应为0-0.5毫米。(图二十三)

②如针杆高度位置不对，则拆去面板，旋松针杆连接轴螺钉， 提高或放低针杆达到高度要求再旋紧螺钉。

4、旋梭的装卸 (见图二十四)

取下旋梭之前，先将针杆升到最高位置，再卸下针板，机针和梭心套，然后旋下旋梭定位钩螺钉1，卸去旋梭定位钩3; 而后松开旋梭的三只螺钉 2， 使旋梭在它的传动轴上能够自由转动，接着用手转动上轮，使送料牙架走向高处。到此，可以用手去旋转旋梭，使它让过将和送料牙架相碰位置，而后取出。

装旋梭过程是依次先拆后装的回复。

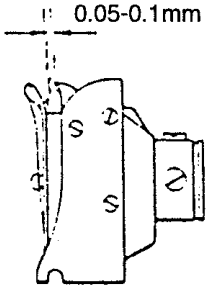

图二十二 Figure 22

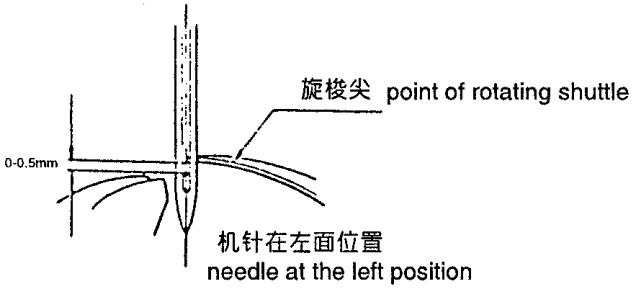

图二十三 Figure 23

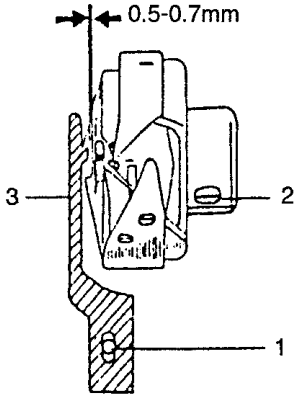

图二十四 Figure 24

VI . LOCATION AND REGULATION OF THE MACHINE

1.Regulation of symmetrical position of horizontal stitches

As shown is Figure 20 when the height of the left and right movement during the needle travelling is not the same, either at the beginning or in the end, skipping will be found and the embroidery material might be torn asunder by the needle. In this way no good embroidery could be produced.

In order that the correct and coordinate position of movement could be achieved, the following steps should be taken; remove the upper cover, release the set screw on the gear of upper shaft and then slightly turn the gear to observe the stitches and adjust the movement of the needle until to the coordinated position, at length tighten the set screw.

2. location of rotating shuttle

(1) Set the width of swaying needle to O position and turn the belt pulley toward the operater manually so as to raise the needle (In case of double curved stitches, the needle is referred to the one on the right side, The sane below) by 2.2mm from the lower limit, when the point of rotating shuttle would be at the central line of the needle. (see Figure 21)

(2) If necessary, loosen the set screw on the rotating shuttle, the point of which should be aligned with the central line of the needle. At the moment, the space between the notch of needle and the rotating shuttle is about 0.05-0.1mm (see Figure 22)

3. Height of the needle staft

(1) Set the width of swaying needle to the maximum and turn the belt pulley toward the operator manually to make the needle stand at the left position and the shuttle point at the centre of the needle. At the moment th length from the needle hole till the shuttle point should be 0~ 0.5mm (see Figure 23)

(2) If the height if needle staff is not in the correct position, it is necessary to remove the panel, release the connecting screw on the needle staff, and then raise or lower the staff to the standard height, After that, re-tighten the screw.

4. Mounting and Dismounting of Rotating shuttle (see Figure 24)]

To start with, raise the needle staff to the maximum before removing the rotating shuttle, then remove needle plate, needle and the case of shuttle core , meanwhile take down the screw 1 on the locating hook for the rotating shuttle and the locating hook 3 itself; release the three screws 2 on the shuttle, which is capable of rotating freely along the driving spinde. Turn the upper wheel manually to make the feeding rack go upward. At this point, turn the rotating shuttle manually to allow the feeding rack passing by the positon to be touched and then remove it.

The mounting of shuttle is done in an inverted order with the process of dismounting.

七、一般故障及其处理方法
VII . FAULTS LOCATING AND HOW TO TREAT

故障类型 Type	产 生 原 因 Cause of Fault	处 理 方 法 How to treat
断 针 Needle is broken	1、机针太细或机针弯曲 2、机针装法错误 3、缝纫时用手推拉缝料 4、缝料过于坚固 1、needle is too fine or bent 2、installation of needle not correct 3、to pull-push manually during sewing 4、material too solid or too thick	调换机针 参看图九 稍许加以扶持，不可推拉 请按技术规格规定使用 replace the needle see Figure 9. slightly adjust, don't pull-push manually material selected in line with specification
挑 针 Skipping	1、机针弯曲或者机针粗细和缝料厚薄不相称 2、机针装法错误 1、needle is bent or it's thickness is not matched with the material 2、installation of needle not correct	调换机针 参看图九 repace the needle see Figure 9
断面线 surface stitches broken	1、穿线错误 2、面线太紧 3、线的质量差 4、机针太细，面线太粗 1、threading is incorrect 2、surface stitch too tight 3、poor quality of thread 4、needle too fine or surface stitches too rough	参看图十 参看图十九减少面线张力 调换缝线 调换机针 see Figure 10 tension of surface stitches should be reduced (see Fiqura 19) replace the thread replace the needle
断底线 Bottom stitches broken	1、底线太紧 2、梭心绕线松乱，不匀 3、针板孔毛糙或磨损 1、The bottom stitch too tight 2、the thread-winding looes or uneven 3、hole of needle plate rough or worn out	减小底线张力 重新绕线 更换针板或用 "O" 砂布砂片 tension of bottom stitch reduced re-winding the thread replace needle plate or to smooth the hole with emery cloth
针迹松浮 stitches are loosened	1、底面线沒有调好 2、挑线簧过松 1、bottom stitches not well-adjusted 2、stitch-spring too loosened	调整底、面线参考图十九调节挑线簧张力 bottom and surface stitches should be well adjusted (see Figure 19) to adjust the tension of stitch-spring
缝料起皱 material gets creased	1、缝料过薄而针距太长 2、底、面线张力过紧 3、压脚压力过強 1、material too thin and needle distance too big 2、tension of bottom and surface stitches too high 3、pressure of presser foot too high	适当调整 调节夹线螺母，挑线簧和梭皮螺钉 旋松调压螺钉，減轻压脚的压力 weil-adjus ed thread-holding nut, stitch spring and screw should be regulated replace pressure-adjusting screw and reduce the pressure of presser foot

八、零件样本
COMPONENT EXAMPLE

1.机壳部件 Components of Housing

序号 Seri No.	件号 Code No.	名称 Description	适用产品 Products applicable			
			FY20U43	数量 Qty.	FY20U33	数量 Qty.
1	1-1	面板组件 Panel components	√	1	√	1
2	1-2	面板螺钉 Panel screw	√	2	√	2
3	1-3	直缝锁紧偏心螺钉 Linear lock eccentric screw	√	1	√	1
4	1-4	直缝锁紧偏心 Linear lock eccentric	√	1	√	1
5	1-5	推板 Thrust plate	√	1	√	1
6	1-6	推板簧 Thrust plate spring screw	√	1	√	1
7	1-7	推板簧螺钉 Thrust plate spring screw	√	2	√	2
8	1-8	针板 Needle plate	√	1	√	1
9	1-9	针板螺钉 Needle plate screw	√	2	√	2
10	1-10	针板内盖板 Inner cover plate	√	1	√	1
11	1-11	针板内盖板簧 Cover plate spring	√	1	√	1
12	1-12	针板内盖板螺钉 Cover plate screw	√	2	√	2
13	1-13	满线限位板 Volume adjusting plate	√	1	√	1
14	1-14	满线限位板螺钉 Volume adjusting plate screw	√	1	√	1
15	1-15	旋梭防护罩螺钉 Rotating shuttle shield screw	√	1	√	1
16	1-16	垫圈 Washer	√	1	√	1
17	1-17	旋梭防护罩 Rotating shuttle shield	√	1	√	1
18	1-18	松线杠杆螺钉 Thread - releasing lever screw	√	1	√	1
19	1-19	松线杠杆扭簧 Thread - releasing lever spring	√	1	√	1
20	1-20	松线杠杆 Thread - releasing lever	√	1	√	1
21	1-21	挑线杆防护罩螺钉 Thread take - up shield screw	√	1	√	1
22	1-22	下过线勾 Lower thread - running hook	√	1	√	1
23	1-23	双过线架 Double thread eyelets rack	√	1	√	1
24	1-24	双过线架螺钉 Double thread eyeslets rack screw	√	1	√	1
25	1-25	松线钉 Thread - releasing pin	√	1	√	1
26	1-26	挑线簧调节座 Stitch - spring adjusting base	√	1	√	1
27	1-27	夹线紧固螺钉 Thread - hold fixing screw	√	1	√	1
28	1-28	过线勾螺母 Panel thread hook nut	√	1	√	1
29	1-29	挑线簧 Stitch spring	√	1	√	1
30	1-30	过线勾 Panel thread hook	√	1	√	1
31	1-31	夹线螺钉 Thread - holding screw	√	1	√	1
32	1-32	夹线板 Thread - holding plate	√	2	√	2
33	1-33	松线板 Thread - releasing plate	√	1	√	1
34	1-34	夹线簧 Thread - holding spring	√	1	√	1
35	1-35	夹线制动板 Thread - holding brake	√	1	√	1

序号 Seri No.	件号 Code No.	名称 Description	适用产品 Products applicable			
			FY20U43	数量 Qty.	FY20U33	数量 Qty.
36	1-36	夹线螺母 Thread-holding nut	√	1	√	1
37	1-37	型号牌铆钉 Model-plate rivet	√	2	√	2
38	1-38	型号牌 Model-plate	√	1	√	1
39	1-39	车壳 Housing	√	1	√	1
40	1-40	上盖 Upper cover	√	1	√	1
41	1-41	上盖后螺钉 Upper cover back screw	√	2	√	2
42	1-42	三眼线勾 3-eyelet hole thread hook	√	1		
		双眼过线架 Double hole thread-running rack			√	1
43	1-43	三眼线勾螺钉 3-eyelet hole thread hook screw	√	1		
		双眼过线架螺钉 Double hole thread-running rack screw			√	1
44	1-44	挑线杆防护罩 Thread take-up shield	√	1	√	1
45	1-45	上盖定位螺钉 Upper cover set screw	√	1	√	1
46	1-46	后盖板螺钉 Back cover plate screw	√	5	√	5
47	1-47	后盖板 Back cover plate	√	1	√	1
48	1-48	绕线器组件 Axis components	√	1	√	1
49	1-49	绕线架轴螺钉 Crank screw	√	1	√	1
50	1-50	绕线复位弹簧销 Extension spring pin	√	1	√	1
51	1-51	绕线轮支架 Thread-winding swaying handle	√	1	√	1
52	1-52	绕线轮支架压簧 Swaying handle presser spring	√	1	√	1
53	1-53	绕线轮支架拉簧 Swaying handle presser spring	√	1	√	1
54	1-54	橡皮塞 Rubber stopper	√	1	√	1
55	1-55	橡皮塞 Rubber stopper	√	2	√	2
56	1-56	橡皮塞 Rubber stopper	√	1	√	1
57	1-57	橡皮塞 Rubber stopper	√	1	√	1
58	1-58	摩擦轮限位架 Volume adjusting plate	√	1	√	1
59	1-59	挡圈 Washer	√	1	√	1
60	1-60	绕线轴 Volume adjusting spindle	√	1	√	1
61	1-61	螺钉 Screw	√	1	√	1
62	1-62	小夹线螺母 Small thread-running plate nut	√	1	√	1
63	1-63	小夹线簧 Small thread-running plate spring	√	1	√	1
64	1-64	小夹线板 Small thread-running pole	√	2	√	2
65	1-65	小夹线螺钉 Small thread-running screw	√	1	√	1

√表示这种型号产品有该零件

√This mark shows that the components are provided in the product of this model.

1.机壳部件 Components of housing

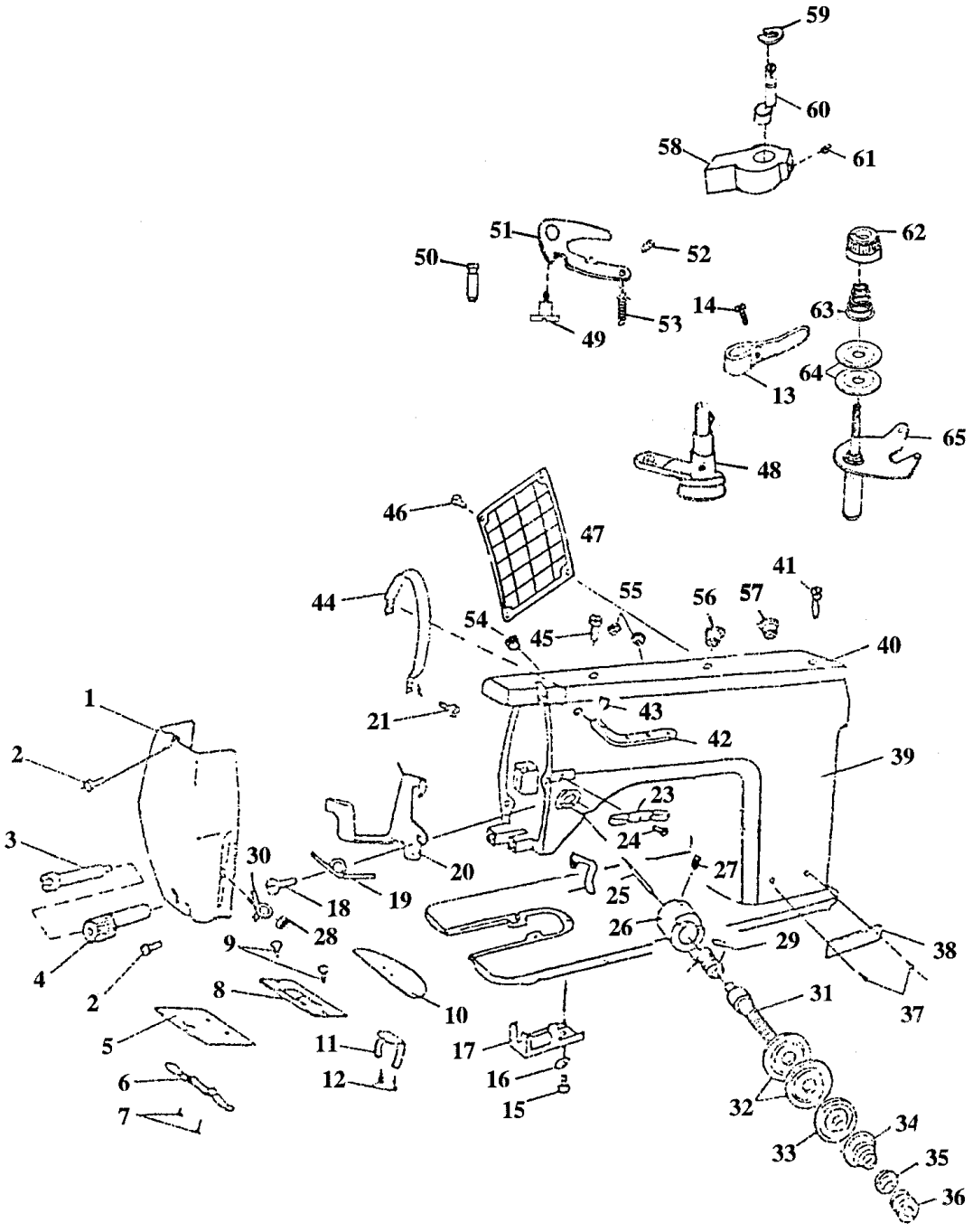

2.挑线刺布部件 Stitch-embroidery components

序号 Seri No.	件号 Code No.	名称 Description	适用产品 Products applicable			
			FY20U43	数量 Qty.	FY20U33	数量 Qty.
1	2-1	上轮止动圈 Upper wheel clutch washer	√	1	√	1
2	2-2	针杆摆动架 Swaying rack of needle staff	√	1	√	1
3	2-3	针杆偏心螺钉 Eccentric pin screw of needle staff	√	1	√	1
4	2-4	上轮锁紧轮 Upper wheel clutch wheel	√	1	√	1
5	2-5	上轮螺钉 Upper wheel screw	√	1	√	1
6	2-6	针杆摆动架销 Pin of swaying rack(needle staff)	√	1	√	1
7	2-7	针杆 Needle staff	√	1	√	1
8	2-8	针杆线勾 Thread-hook of needle staff	√	1	√	1
9	2-9	机针 Needle	√	1	√	1
10	2-10	机针紧定螺钉 Locking screw of needle	√	1	√	1
11	2-11	针杆连接螺钉 Pin-screw of connecting shaft	√	1	√	1
12	2-12	针杆连接轴销垫圈 Pin-washer of connecting shaft	√	1	√	1
13	2-13	针杆连接轴体 Connecting shaff	√	1	√	1
14	2-14	针杆连接轴销 Pin of connecting shaff	√	1	√	1
15	2-15	针杆连接轴销紧定螺钉 Pin-locking screw of connecting shaft	√	1	√	1
16	2-16	小连接导板 Guide of small connecting staff	√	1	√	1
17	2-17	小连接导板螺钉 Screw of guide	√	2	√	2
18	2-18	倒牙螺钉 Toothed screw	√	1	√	1
19	2-19	小连杆 Small connecting staff	√	1	√	1
20	2-20	挑线曲柄 Crank of needle staff	√	1	√	1
21	2-21	挑线摇杆组件 Stitch-staff component	√	1	√	1
22	2-22	挑线摇杆 Stitch-swaying staff	√	1	√	1
23	2-23	挑线摇杆销 Pin of swaying staff	√	1	√	1
24	2-24	挑线摇杆销螺钉 Pin screw of swaying staff	√	1	√	1
25	2-25	挑线曲柄螺钉 Screw of crank	√	1	√	1
26	2-26	针杆曲柄 Needle staff crank	√	1	√	1
27	2-27	曲柄紧固螺钉 Crank fastening screw	√	2	√	2
28	2-28	上轴前轴套紧定螺钉 Fastening screw(of front sleeve)	√	1	√	1
29	2-29	上轴前轴套 Front sleeve of upper shaft	√	1	√	1
30	2-30	上轴螺旋齿轮螺钉 Screw of spiral gear	√	2	√	2
31	2-31	上轴螺旋齿轮 Spiral gear of upper shaft	√	1	√	1
32	2-32	上轴弧齿锥齿轮螺钉 Screw of arc-cone gear	√	2	√	2
33	2-33	上轴弧齿锥齿轮 Arc-cone gear(upper shaft)	√	1	√	1
34	2-34	送布凸轮螺钉 Screw of cloth-feeding cam	√	1	√	1
35	2-35	送布凸轮 Cam of cloth-feeding	√	1	√	1
36	2-36	上轴 Upper shaft	√	1	√	1

序号 Seri No.	件号 Code No.	名称 Description	适用产品 Products applicable			
			FY20U43	数量 Qty.	FY20U33	数量 Qty.
37	2-37	上轴后轴套 Back sleeve of upper shaft	√	1	√	1
38	2-38	上轴后轴套紧定螺钉 Fastening screw of back sleeve	√	1	√	1
39	2-39	上轮 Upper wheel	√	1	√	1
40	2-40	上轮内套 Sleeve of upper wheel	√	1	√	1
41	2-41	上轴挡圈螺钉 screw	√	2	√	2
42	2-42	上轴挡圈 washer	√	1	√	1
43	2-43	上轮螺钉 Upper wheel lock screw	√	2	√	2
44	2-44	针杆定位片 Locating plate of needle staff				
45	2-45	针杆定位片螺钉 Screw of locating plate				
46	2-46	针杆摆动架螺钉 Pin screw	√	1	√	1
47	2-47	上轮内套螺钉 Sleeve screw of upper wheel	√	1	√	1

2.挑线刺布部件 Stitch – embroidery components

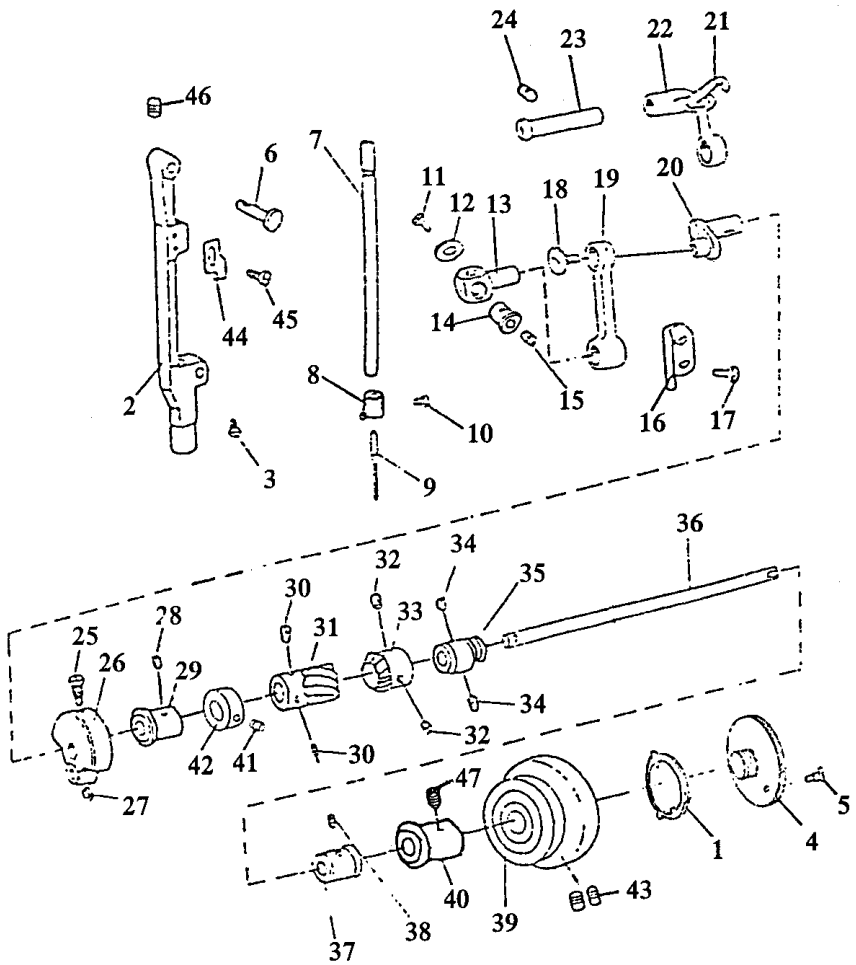

3.送料部件 Materiml-feeding components

序号 Seri No.	件号 Code No.	名称 Description	适用产品 Products applicable			
			FY20U43	数量 Qty.	FY20U33	数量 Qty.
1	3-1	抬牙连杆螺钉 Screw of toothed connecting bar	√	2	√	2
2	3-2	油毡 Oil felt	√	1	√	1
3	3-3	抬牙连杆 Toothed connecting bar	√	1	√	1
4	3-4	小圆锥螺母 Small cone nut	√	4	√	4
5	3-5	针距座连杆 Connecting bar of needle distance base	√	1	√	1
6	3-6	小圆锥螺钉 Small cone screw	√	4	√	4
7	3-7	大顶尖螺钉 Pointed screw	√	4	√	4
8	3-8	大顶尖螺母 Pointed nut	√	4	√	4
9	3-9	送布曲柄 Crank of cloth-feeding	√	1	√	1
10	3-10	送布曲柄螺钉 Crank screw of cloth-feeding	√	1	√	1
11	3-11	送料牙螺钉 Screw of material-feeding tooth	√	2	√	2
12	3-12	送料牙 Material-feeding tooth	√	1	√	1
13	3-13	牙架小顶尖螺母 Pointed screw of tooth rack	√	2	√	2
14	3-14	小顶尖螺母 Pointed nut	√	2	√	2
15	3-15	送布轴 Cloth-feeding shaft	√	1	√	1
16	3-16	牙架 Tooth-rack	√	1	√	1
17	3-17	抬牙轴组件 Toothed shaft component	√	1	√	1
18	3-18	抬牙曲柄螺钉 Toothed-crank screw	√	1	√	1
19	3-19	抬牙曲柄 Toothed crank	√	1	√	1
20	3-20	牙叉 Toothed fork	√	1	√	1

3.送料部件 Materiml–feeding components

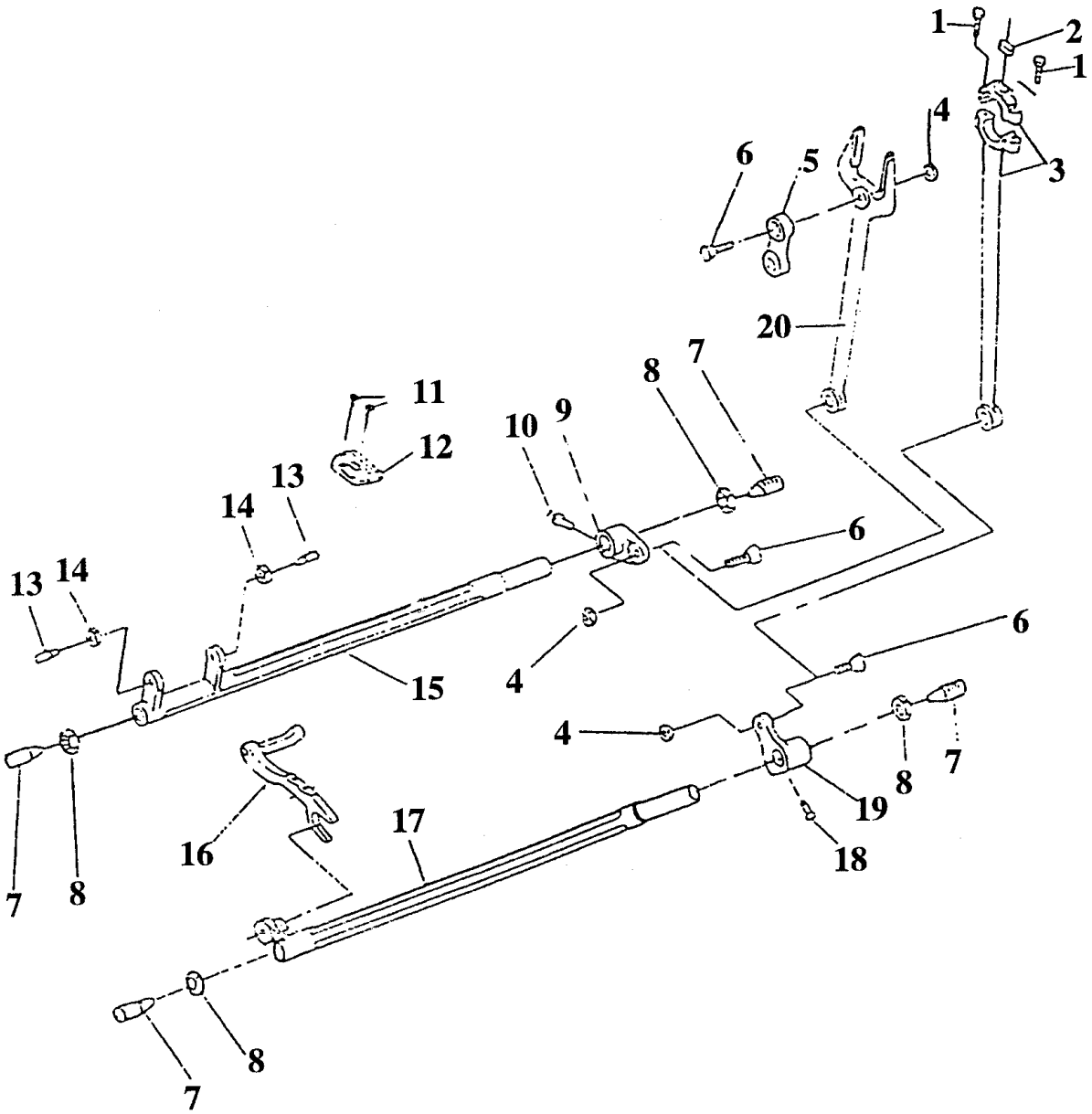

4.勾线部件 Thread-hooking components

序号 Seri No.	件号 Code No.	名称 Description	适用产品 Products applicable			
			FY20U43	数量 Qty.	FY20U33	数量 Qty.
1	4-1	旋梭定位板 Locating plate of rotating shuttle	√	1	√	1
2	4-2	旋梭定位板螺钉 Screw of locating plate	√	1	√	1
3	4-3	梭子 Shuttle	√	1	√	1
4	4-4	梭心 Shuttle core	√	1	√	1
5	4-5	旋梭 Rotating shuttle	√	1	√	1
6	4-6	旋梭轴前轴套 Front sleeve of rotating shuttle shaft	√	1	√	1
7	4-7	旋梭轴前轴套螺钉 Front sleeve screw	√	1	√	1
8	4-8	旋梭轴挡圈 Retainer of rotating shuttle shaft	√	1	√	1
9	4-9	旋梭轴挡圈螺钉 Retainer screw	√	2	√	2
10	4-10	旋梭轴后轴套 Back sleeve of rotating shuttle shaft	√	1	√	1
11	4-11	旋梭轴后轴套螺钉 Screw of back sleeve	√	1	√	1
12	4-12	旋梭轴挡圈 Retainer of rotating shuttle shaft	√	1	√	1
13	4-13	旋梭轴挡圈螺钉 Retainer screw	√	2	√	2
14	4-14	旋梭轴 Rotating shuttle shaft	√	1	√	1
15	4-15	旋梭轴弧齿锥齿轮螺钉 Screw arc-cone gear	√	2	√	2
16	4-16	旋梭轴弧齿锥齿轮 Arc-cone gear of rotating shuttle shaft	√	1	√	1
17	4-17	下轴弧齿锥齿轮 Arc-cone gear of lower shaft	√	1	√	1
18	4-18	下轴弧齿锥齿轮螺钉 Screw of arc-cone gear	√	2	√	2
19	4-19	下轴前后轴套螺钉 Screw	√	2	√	2
20	4-20	下轴前轴套 Front sleeve of lower shaft	√	1	√	1
21	4-21	下轴挡圈 Lower shaft retainer	√	3	√	2
22	4-22	下轴挡圈螺钉 Retainer screw of lower shaft	√	6	√	4
23	4-23	下轴后轴套 Back sleeve of lower shaft	√	1	√	1
24	4-24	下轴 Lower shaft	√	1	√	1
25	4-25	下轴差动齿轮螺钉 Screw of differential gear	√	2	√	2
26	4-26	下轴差动齿轮 Differential gear	√	1	√	1
27	4-27	立轴差动齿轮螺钉Screw of differential gear	√	2	√	2
28	4-28	立轴差动齿轮 Differential gear	√	1	√	1
29	4-29	立轴下轴套 Lower sleeve of veritical shaft	√	1	√	1
30	4-30	差动滑动套 Differential shaft sliding-cover	√	1		
31	4-31	下离合套筒 Lower clutch sleeve	√	1		
32	4-32	下离合套筒螺钉 Screw	√	2		
33	4-33	上离合套筒 Upper clutch sleeve	√	1		
34	4-34	上离合套筒螺钉 Screw	√	2		
35	4-35	立轴上轴套 Upper sleeve of vertical shaft	√	1	√	1
36	4-36	立轴上轴套螺钉 Screw of upper sleeve	√	1	√	1
37	4-37	立轴弧齿锥齿轮 Arc-cone gear	√	1	√	1
38	4-38	大差动连杆 Differential connecting bar	√	1		
39	4-39	立轴 Vertical shaft	√	1	√	1

4.勾线部件 Thread-hooking components

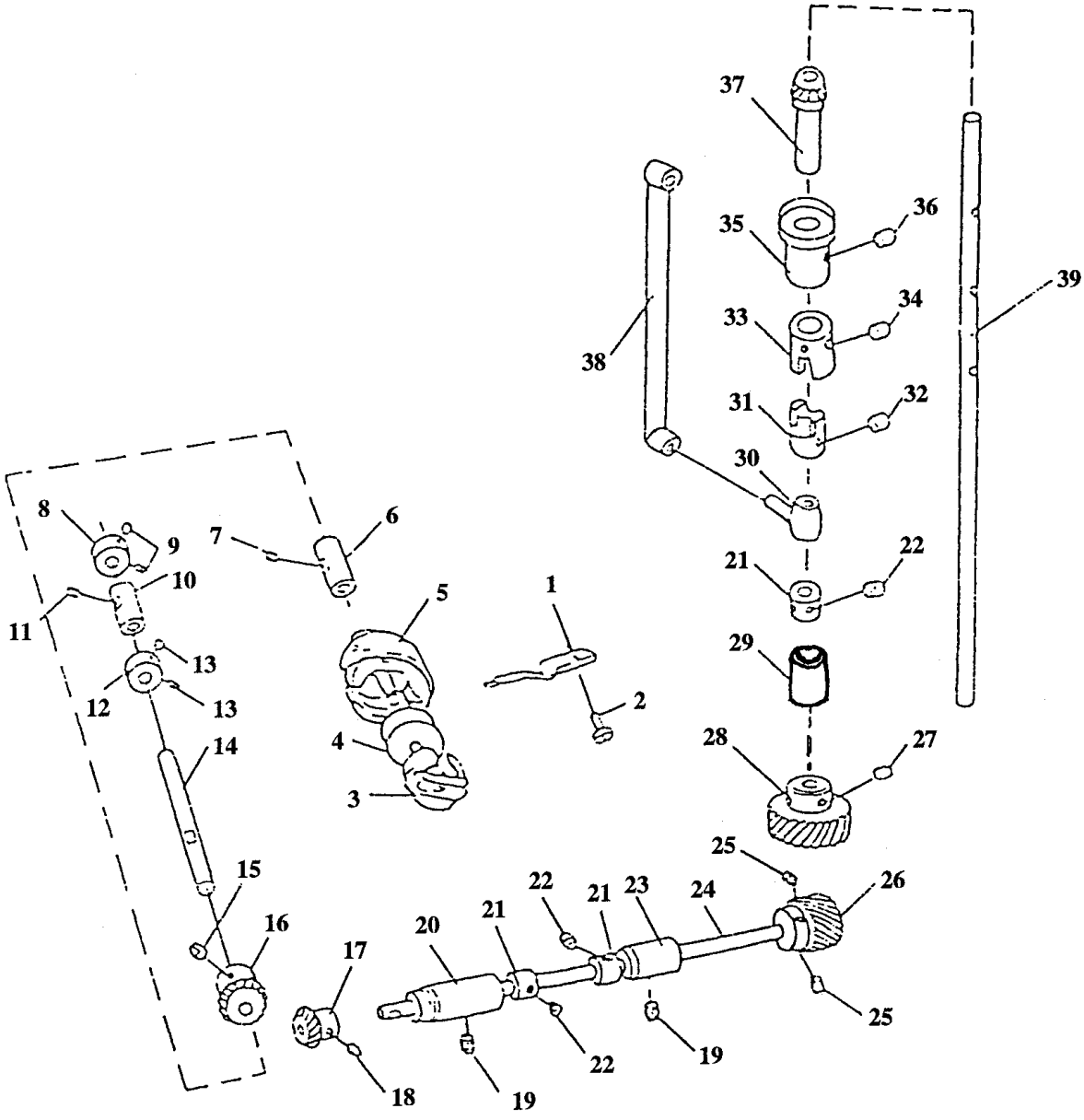

5.摆针部件 Components of swaying needle

序号 Seri No.	件号 Code No.	名称 Description	适用产品 Products applicable			
			FY20U43	数量 Qty.	FY20U33	数量 Qty.
1	5-1	定位架 Locating rack	√	1	√	1
2	5-2	定位架螺钉 Screw of locating rack	√	2	√	2
3	5-3	小油盘螺钉 Screw of small oil tray	√	2	√	2
4	5-4	摆针齿轮 Gear of swaying needle	√	1	√	1
5	5-5	偏心挡圈 Eccentric retainer	√	1	√	1
6	5-6	摆针偏心凸轮连接螺钉 Connecting screw of eccentric cam	√	2	√	2
7	5-7	摆针偏心凸轮 Eccentric cam	√	1	√	1
8	5-8	摆针偏心凸轮后挡圈 Back retainer of eccentric cam	√	1	√	1
9	5-9	摆针轴挡圈螺钉 Retainer screw	√	2	√	2
10	5-10	摆针轴挡圈 Rctainer of swaying needle shaft	√	1	√	1
11	5-11	摆针轴 Swaying needle shaft	√	1	√	1
12	5-12	横针拨叉 Fork of horizontal needle	√	1	√	1
13	5-13	针杆偏心销 Eccentric pin of needle staff	√	1	√	1
14	5-14	摆针滑块 Sliding block of swaying needle	√	1	√	1
15	5-15	摆针导块座 Guide base of swaying needle	√	1	√	1
16	5-16	摆针导块座螺钉 Screw of guide base	√	1	√	1
17	5-17	摆针调节连杆 Adjusting connecting bar	√	1	√	1
18	5-18	差动连杆连接螺钉 Connecting screw of differential connecting bar	√	3	√	3
19	5-19	摆针定位块 Locating block of swaying needle	√	1	√	1
20	5-20	摆针导块连接销 Connecting pin of guide	√	1	√	1
21	5-21	摆针定位块调节螺钉 Adjusting screw of locating block	√	2	√	2
22	5-22	摆针定位块紧定螺母 Fastening nut of locating block	√	2	√	2
23	5-23	摆针调节曲柄套螺钉 Screw for adjusting crank sleeve	√	2	√	2
24	5-24	摆针调节曲柄弹簧 Spring for adjusting crank	√	1	√	1
25	5-25	摆针调节曲柄组件 Adjusting crank component	√	1	√	1
26	5-26	摆针扳手定位挡圈螺钉 Screw of spanner locating retainer	√	2	√	2
27	5-27	摆针扳手定位挡圈 Locating retainer of spanner locating retainer	√	1	√	1
28	5-28	摆针扳手轴套 Spanner sleeve	√	1	√	1
29	5-29	摆针扳手轴组件 Spanner of swaying needle component	√	1	√	1
30	5-30	垫圈 Washer	√	1	√	1
31	5-31	小油盘垫片 Washer of small oil tray	√	2	√	2
32	5-32	油线 Oil gauze	√	1	√	1
33	5-33	小油盘 Small oil tray	√	1	√	1
34	5-34	摆针针距左定位块 Left locating block for needle distance	√	1	√	1
35	5-35	摆针针距右定位块 Right locating block for needle distance	√	1	√	1
36	5-36	调节架 Adjusting rack	√	1	√	1
37	5-37	摆针针距定位块螺钉 Screw of locaking block	√	2	√	2
38	5-38	摆针定位螺钉 Locating screw	√	2	√	2

序号 Seri No.	件号 Code No.	名称 Description	适用产品 Products applicable			
			FY20U43	数量 Qty.	FY20U33	数量 Qty.
39	5-39	摆针针距定位架 Locating rack for needle distance	√	1	√	1
40	5-40	摆针针距定位架螺钉 Screw of locating rack	√	2	√	2
41	5-41	摆针针距调节架(A) Adjusting rack(A)for need distance	√	1	√	1
42	5-42	摆针针距调节架(B) Adjusting rack(B)for need distance	√	1	√	1
43	5-43	摆针针距定位架拉簧 Extension spring of locating rack	√	1	√	1
44	5-44	小差动连杆 Differential connecting bar	√	1		
45	5-45	摆针滑块连接螺钉 Connecting screw for sliding block	√	1		
46	5-46	差动连接轴挡圈 Retainer of differential connecting shaft	√	1		
47	5-47	差动曲柄组件 Differential crank component	√	1		
48	5-48	差动连接轴 Differential connecting shaft	√	1		
49	5-49	差动曲柄定位架组件 Locating rack component	√	1		
50	5-50	螺钉 Screw	√	3	√	3
51	5-51	差动曲柄定位架螺钉 Screw of crank locating rack	√	1	√	1
52	5-52	拉簧螺钉 Screw of extension spring	√	1	√	1
53	5-53	差动曲柄定位架螺钉 Screw of crank locating rack	√	1	√	1
54	5-54	螺母 Nut	√	1	√	1
55	5-55	手柄组件 Handle component	√	1	√	1
56	5-56	差动连杆连接螺钉 Screw of differential connecting bar	√	1	√	1
57	5-57	螺母 Nut	√	1	√	1
58	5-58	顶尖螺钉 Screw	√	1	√	1
59	5-59	油盘固定座 Oil tray set base			√	1
60	5-60	油盘固定座螺钉 Screw of oil tray set base			√	2
61	5-61	螺钉 Screw			√	1

5.摆针部件 Components of swaying needle

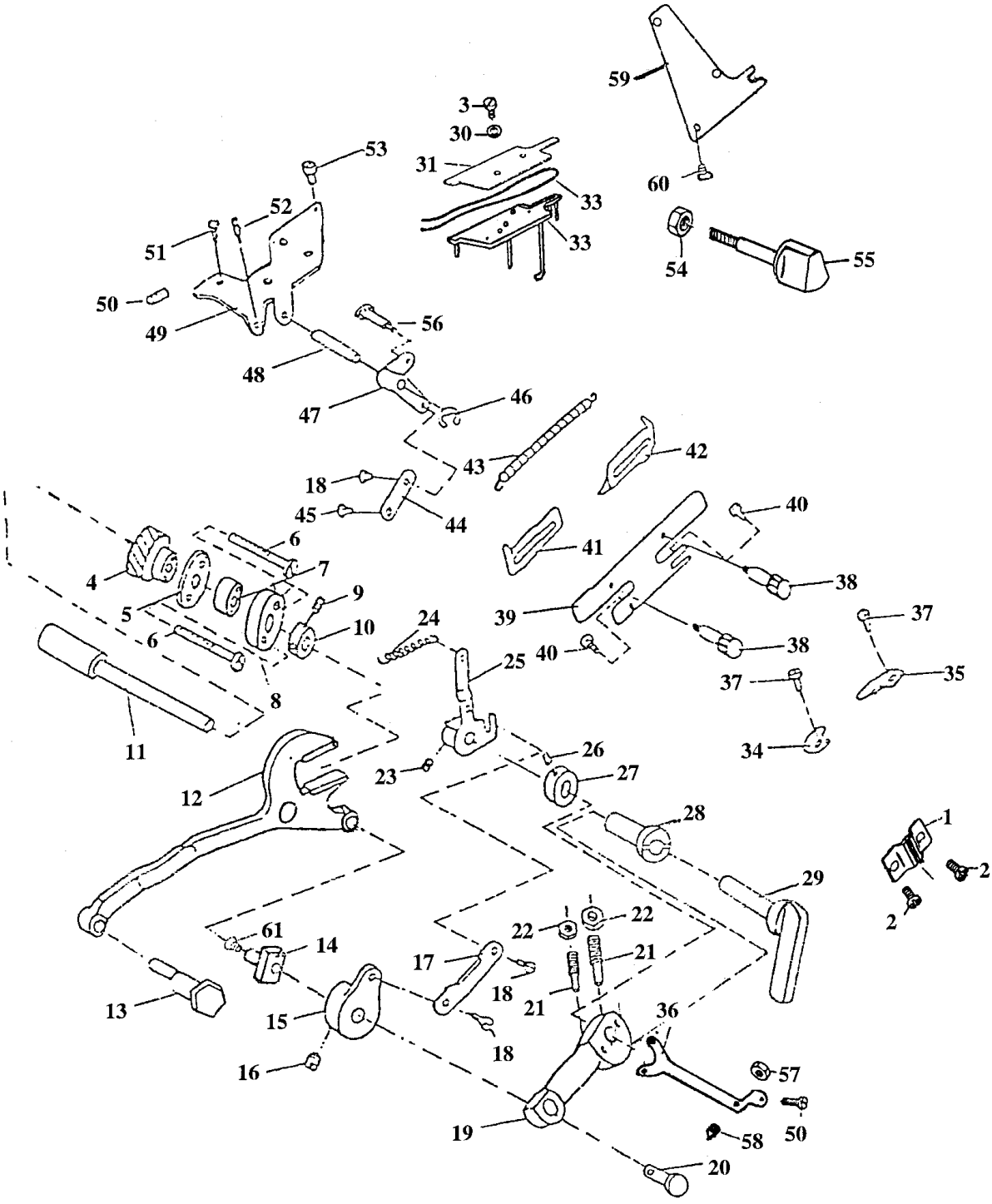

6.压脚部件 Components of presser foot

序号 Seri No.	件号 Code No.	名称 Description	适用产品 Products applicable			
			FY20U43	数量 Qty.	FY20U33	数量 Qty.
1	6-1	调压螺钉 Screw for pressures adjusting	√	1	√	1
2	6-2	压杆簧 Pressing bar spring	√	1	√	1
3	6-3	压紧杆 Presser bar	√	1	√	1
4	6-4	压脚螺钉 Screw of presser foot	√	1	√	1
5	6-5	压脚组件 Presser foot component	√	1	√	1
6	6-6	压脚扳手销 Spanner pin	√	1	√	1
7	6-7	压脚扳手 Spanner	√	1	√	1
8	6-8	压脚扳手销螺钉 Spanner pin screw	√	1	√	1
9	6-9	压脚提升架 Locating base of presser	√	1	√	1
10	6-10	压脚导架 Presser bar bracket	√	1	√	1
11	6-11	压脚导架螺钉 Screw of bracket	√	1	√	1
12	6-12	开口销 Open-pin	√	3	√	3
13	6-13	膝提杠杆座螺钉 Screw of knee-control lever base	√	2	√	2
14	6-14	拉杆弹簧卡簧 Elastic spring of pull rod	√	2	√	2
15	6-15	膝提定位座组件 Knee-control locating base component	√	1	√	1
16	6-16	抬压脚拉杆 Pull rod of presser foot	√	1	√	1
17	6-17	膝提横针拉杆 Pull rod of knee-control horizontal needle	√	1	√	1
18	6-18	抬压脚杠杆螺钉 Pull-rod screw	√	1	√	1
19	6-19	抬压脚杠杆 Lever of presser foot	√	1	√	1

6.压脚部件 Components of presser foot

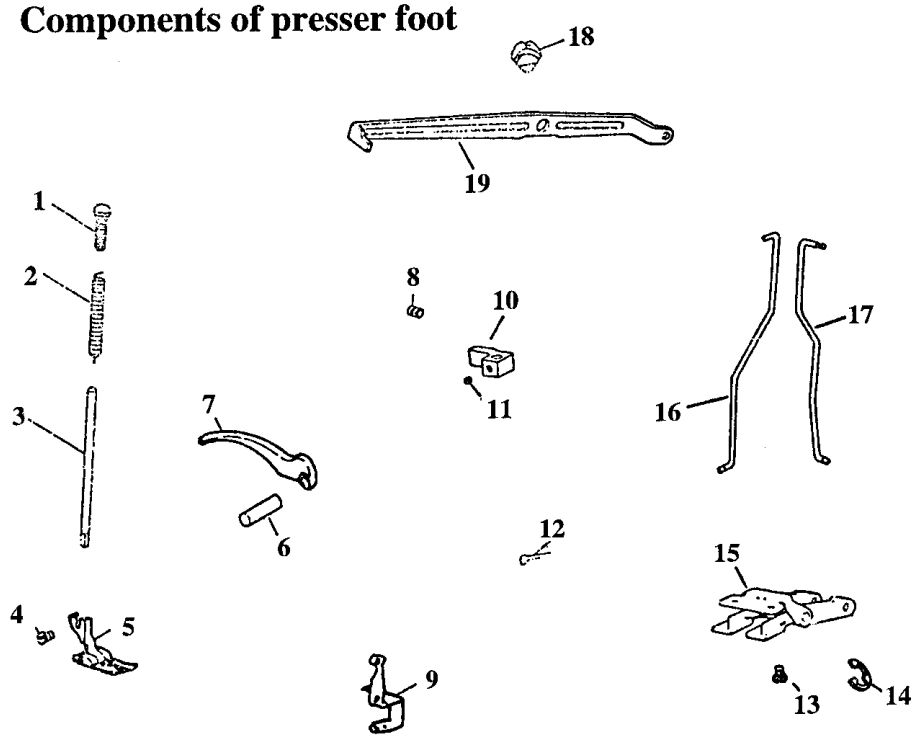

7.倒顺针距部件 Components of needle distance of reversal stitch

序号 Seri No.	件号 Code No.	名称 Description	适用产品 Products applicable			
			FY20U43	数量 Qty.	FY20U33	数量 Qty.
1	7-1	针距调节螺杆 Adjusting screw for needle distance	√	1	√	1
2	7-2	针距座销 Pin of needle-distance base	√	1	√	1
3	7-3	针距座支头螺钉 Set screw of needle-distance base	√	1	√	1
4	7-4	针距座 Needle-distance base	√	1	√	1
5	7-5	倒针复位拉簧 Restoring extension spring of reversal stitch	√	1	√	1
6	7-6	倒针复位拉簧勾螺钉 Screw of extension spring hook	√	1	√	1
7	7-7	倒针复位拉簧勾 Restoring extension-spring hook	√	1	√	1
8	7-8	倒针曲柄销 Crank pin	√	1	√	1
9	7-9	倒针曲柄 Crank	√	1	√	1
10	7-10	倒针扳手轴 Spanner shaft	√	1	√	1
11	7-11	倒针扳手 Spanner of reversal stitch	√	1	√	1
12	7-12	倒针扳手螺钉 Spanner screw	√	1	√	1
13	7-13	针距旋钮螺钉 knob screw for needle-distance	√	1	√	1
14	7-14	针距指示牌 Indication plate for needle distance	√	1	√	1
15	7-15	针距旋钮 Knob	√	1	√	1
16	7-16	针距定位销 Locating pin	√	1	√	1
17	7-17	定位销压簧 Pressing spring of locating pin	√	1	√	1
18	7-18	方牙螺套 Toothed nut	√	1	√	1
19	7-19	方牙螺套支头螺钉 Screw of toothed nut	√	1	√	1
20	7-20	倒针曲柄螺钉 Crank screw	√	1	√	1

7.倒顺针距部件 Components of needle distance of reversal stitch

