花样缝电脑平缝机 Sf510 Series

Computerized special stitch pattern lockstitch sewing machine

使用说明书

OPERATION MANUAL

零件手册

PARTS BOOK

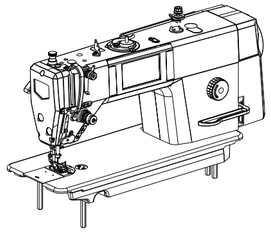

重要安装事项

为使您正确使用本机,须对本机的各种功能充分了解,以便安全操作。使用前请仔细阅读使用说明书。我们希望您能长期愉快地使用本机，请保存好说明书，以备查阅。

1. 无论您何时使用本机，须了解基本的安全事项，包括但不限于下列事项。
2. 通读所有说明，并保存好使用说明书。如果需要，请随时翻阅。
3. 使用本机前，必须弄清与本机有关安全规定、标准在您的国家是否适用。
4. 使用本机前或使用本机时，所有安全装置必须配备齐全。机器运转时，无安全装置属违章操作，决不允许。
5. 操作人员必须经过适当的培训。
6. 为了您的人身安全，我们建议您戴上防护眼镜。
7. 下列情况下，请关闭电源开关或拔下电源插头：

7-1 机针穿线和换梭心；

7-2 更换机针、压脚、针板、送料牙、布料导板等；

7-3 进行维修时；

7-4 操作区无人时。

8. 在机器加油润滑时，若不小心让油接触眼睛、皮肤或咽下机油或润滑油，请立即清洗被沾染部位或去医院检查。
9. 无论机器运转与否，严禁乱动机器零部件和配套装置。
10. 机器的维修、改造和调整等工作必须由专业技术人员进行。
11. 应由专业受训人员进行一般的维修和检查工作。
12. 必须在专业电器人员或专业技术人员的指导下进行有关电器部件的维修，任何电器部件一经发现受损，立即停止机器运转。
13. 使用期间要定期全面彻底清洗机器。
14. 正常操作本机时，必须进行试运转，工作环境远离强噪音源，如高频电焊机等。
15. 由电气人员选择合适的插头和有地线的插座。
16. 若需要改造或改进本机,请采用有效可行的安全措施。本公司对由此而产生的伤害不承担责任。
17. 本机只适用于专业缝纫。
19.两种警告提示符：

操作人员或维修人员请注意

特别注意事项

IMPORTANT SAFETY INSTRUCTIONS

To get the most out of the many functions of this machine andoperate it insafety.it is necessary to use this machine correctly. Please read this Instruction Manual carefully before use. We hope you will enjoy the use of your machine for a long time. Please remember to keep this manual in a safe place.

1. Observe the basic safety measures, including, but not limited to the following ones, whenever you use the machine.
2.Read all the instructions, including, but not limited to this Instruction Manual before you use the machine, in addition, keep this Instruction Manual so that you may read it at any-time when necessary.
3. Use the machine after it has been ascertained that it conforms with safety rules/standards valid in your country.
4. All safety devices must be in position when the machine is ready for work or in operation The operation without the specified safety devices is not allowed.
5. This machine shall be operated by appropriately-trained operators.
6. For your personal protection, we recommend that you wear safety glasses.
7. For the following, turn off the power switch of disconnect the power plug of the machine from the receptacle.

7-1 For threading needle(s) and replacing bobbin.

7-2 For replacing part(s) of needle, presser foot, throat plate, feed dog, cloth guide etc.

7-3 For repair work.

7-4 For when leaving the working place of when the working place is unattended.

8. If you should allow oil, grease, etc. used with the machine and devices to come in contact with your eyes or skin or swallow any of such liquid by mistake, immediately wash the contacted areas and consult a medical doctor.
9. Tampering with the live parts and devices, regardless of whether the machine is powered, is prohibited.
10. Repairing, reforming and adjustment works must only be done by appropriately trained technicians or specially skilled personnel.
11. General maintenance and inspection works have to be done by appropriately trained personnel.
12. Repair and maintenance works of electrical components shall be conducted by qualified electric technicians or under the audit and guidance of specially skilled personnel. Whenever your find a failure of any of electrical components, immediately stop the machine.
13. Periodically clean the machine throughout the period of use.
14. Grounding the machine is always necessary for the normal operation of the machine. The machine has to be operated in an enviorment that is free from strong noise sources such as high-frequency welder.
15. An appropriate power plug has to be attached to the machine by electric technicians, Power plug has to be connected to grounded receptacle.
16.Remodel or modify the machine in accordance with the safety rules/standards while taking all the effective safety measures. We assumes no responsibility for damage caused by reforming or modification of the machine.
17. The machine is only allowed to be used for the ppose intended. Other used are not allowed.
18. Warning hints are marked with the two shown symbols.

Danger of injury to operator or service staff

Items requiring special attention

安全操作事项 FOR SAFE OPERATION

1. 为避免触电,请不要打开电机的电箱盖,也不要触摸电箱内部组件。
1. To avoid electrical shock hazards, neither open the cover of the electrical box for the motor nor touch the components mounted inside the electrical box.

1. 为避免人身伤害,移动防护罩、护手挡或安全装置时，请不要开动机器。
2. 为尽可以避免机器运转造成的人身伤害,手指、头部和衣服应远离上轮，上轮周围不要放置任何物品。
3. 为避免人身伤害,当您打开电源开关或操作机器时，切勿将手放在机针下方。
4. 为避免人身伤害,机器运转时，切勿将手放入挑线杆筋护罩内。
5. 旋梭运转时，勿将手指放在旋梭附近。另外，换梭芯时，请关掉机器电源开关。
6. 为尽可以避免人身伤害,当抽起/抬起机头时，勿将手指放入机器内部。
7. 为尽可以避免机器的突然启动所造成的事故，抬起机头时，请关掉机器的电源。
8. 机器配有电机，机器未运转时，电机无噪音；为避免机器的突然启动所造成的事故，请关掉机器的电源开关。
9. 为尽可能避免触电或电器组件受损，在插上或拔下插头之前，请关掉电源开关。

1. To avoid personal injury, never operate the machine with any of the belt cover, finger guard of safety devices removed.
2. To prevent possible personal injuries caused by being caught in the machine. Keep your fingers, head and clothes away from the handwheel, cover and the motor while the machine is in operation. In addition, place nothing around them.
3. To avoid personal injury, never put your hand under the needle when you turn ON the power switch or operate the machine.
4. To avoid personal injury, never put your fingers into the thread take-up cover while the machine is in operation.
5. The hook rotates at a high speed while the machine is in operation. To prevent possible injury to hands, be sure to keep your hands away from the vicinity of the hook during operation. In addition, be sure to turn OFF the power to the machine when replacing the bobbin.
6. To avoid possible personal injuries, be careful not to allow your fingers in the machine when tilting/raising the machine head.
7. To avoid possible accidents because of abrupt start of the machine, turn OFF the power to the machine when tiling the machine head.
8. If your machine is equipped with a serve-motor, the motor does not produce noise while the machine is at rest. To avoid possible accidents due to abrupt start of the machine, be sure to turn OFF the power to the machine.
9. To prevent possible accidents because of electric shock or damaged electrical component(s), turn OFF the power switch in prior to the connected /disconnection of the power plug.

开机前的注意事项 Precautions Prior to Startup

1. 机头装箱前为了防止机件生锈,在部分均涂有较厚的防锈油脂,同时机头装箱后,还可能在较长的贮藏和长途运输阶段造成油脂硬化和在机器表面积聚灰尘,所以必须将表面的油脂和灰尘用汽油和洁净的软布擦拭干净。
2. 机器出厂时，虽经过周密的检查和试验，但在长途运输中也可能受到强烈的震动使机件松动或歪曲，所以应该做一次周密的检查，并用手转动上轮，看机件之间有无转动困难、碰撞现象或其它不均匀的阻力，不正常的声响，如有应作适当的调整，机器状态正常后才可正式试车。
3. 油盒内机油液面高度没有在正常范围内绝不能开车。
4. 机器运转时，上轮转向应该是逆时针方向（从上轮外侧面看）。
5. 确认电控铭牌上所标电压及相位是否正确。
6. 生产日期见合格证。

1. The machine head is coated with a thick layer of rust-prevention grease before encasement, and the encased machine head may possibly be subjected to grease hardening and dust buildup on the machine surface in process of long storage and long-haul traffic; therefore, take care to remove the grease and dust from the surface using soft cloth and gasoline.
2. Though the machine was inspected and tested with care before factory leaving, it might be affected by violent vibration resulting in looseness or distortion of the machine parts; therefore the operator shall thoroughly check the machine, turn the upper wheel by hand and check it for difficulty in free rotation, slight impact, and other uneven resisting force or abnormal noises, and make appropriate adjustment if any to restore the machine state before formal trial run.
3. Never start up the machine if the oil liquid level in the oil box falls outside the normal range.
4. The upper wheel shall rotate counterclockwise (when it is viewed from the lateral surface of the upper wheel) when the machine is operating.
5. Check whether the voltage and phases indicated on the electric-control data plate are correct.
6. The date of manufacture is indicated on the certificate of conformity.

使用注意事项 Precautions for Use

1. 当接通电源或机器运转时，请勿将手与机针接触。
2. 机器运转时,请勿将手指伸入挑线杆防护罩内。
3. 操作者用手送料时,请勿将手指伸入护针架。
4. 机头翻动及拆手盖时,一定要切断电源。
5. 操作者离开机器时,必须切断电源。
6. 机器运转时,绝不允许头或手靠近一切转动部件,如皮带、绳线器。
7. 只有在停机时，才能装卸防护罩或其它保护装置。
8. 不能用香蕉水等油漆稀释剂擦拭机头表面。

1. Never touch the needle by hand when the machine is powered on or while it is operating.
2. Never put your finger into the protection cover of take-up lever during operation of the machine.
3. The operator must not put his finger into the needle guard bracket when he feeds the sewing materials by hand.
4. Operator must trim off the electricity supply before he turns over the machine head or removes the hand cover.
5. The operator must trim off the electricity supply before he gets away from the machine.
6. Prohibit the head, hands and anything to approach the upper wheel and bobbinwinder while the machine is operating.
7. Never remove or mount the protection cover or other protection devices before the machine is stopped.
8.Never wipe up the surface of machine head using paint thinner such as acetone.

1.缝纫机规格 MACHINE SPECIFICATIONS

		SF510-D3	SF510-D4	SF510H-D4
用途 USE		薄料、中厚料 Medium-weight materials		厚料 Heavy-weight materials
最高缝速 MAX. Sewing speed		5000sti/min		4000sti/min
最大针距 MAX.Stitch length		5mm	7mm	7mm
压脚高度 Presser foot height	手抬 lifting lever	5.5mm		
	膝控 Knee lifter	13mm		
	自动 automatic	9.5mm		
送料牙高度		1.0mm		1.2mm
机针 Needle		DBx1 9#-18#		DPx5 18#-22#
润滑油		15号白油 NO.10 White oil		

2-1. 安装方法 Installation

①. 调速器
②. Speed controler
②. 连杆
②. Connecting rod

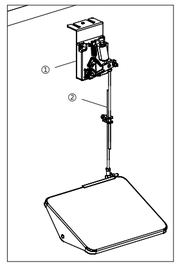

2-2. 安装 Installation

①. 鞋钉 (8个)
②. 机头连接钩座 (2个)
③. 头部防震垫(小) (2个)
④. 头部防震垫(大) (2个)
⑤. 托盘 (1个)

①. Nail (8pcs)
②. Rubber cushions (2pcs)
③. Head cushions(small) (2pcs)
④. Head cushions(big) (2pcs)
⑤. Tray (1pcs)

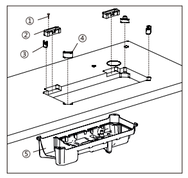

2-3. 机头 Machine head

①. 机头
②. 机头铰链 (2pcs)
③. 机头支柱

①. Machine head
②. Hinges (2pcs)
③. Frame support bar

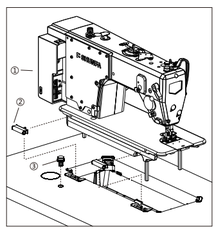

2-4. 线架 Cotton stand

①线架
①Cotton stand

注意：将螺母④拧紧以便将两个橡胶垫圈(2)和垫圈③夹紧，使线架①固定

NOTE:
Securely tighten the nut ④ ,so that the two rubber cushions ② and the washer ③ are securely clamped and so that the cotton stand ① does not move

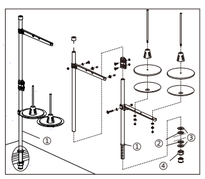

3. 加油方法 Lubrication

注意
为了防止意外的启动造成的事故，请关闭电源后进行。
WARNING
Turn OFF the power before starting the work so as prevent accidents caused by abrupt start of the sweing machine.

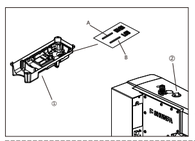

运转缝纫机前
1.请把机油倒进油槽①里，一直加到横线标记A的位置
2.油槽的油面降到横线标记B以下时，请再次补充机油。
3.加油后运转缝纫机，如果润滑正常时，可以通过油窗②看到油的流动。
4.油流动量的多少，与油量的多少无关。

新缝纫机或较长时间没有使用的缝纫机在使用之前，应进行10分钟3000-5000rpm的磨合运转。

Informaion on lubrication
1.Fill oil pan ③ with Machine Oil up to HIGH mark A.
2.When the oil level lowers below LOW mark B,refill the oil pan with the specified oil.
3.when you operate the machine atter lubrication,you will see splashing oil through oil sight window ② if the lubrication is adequate.
4.Note that the omount of the splashing oil is unrelated to the amount of the lubricating oil.

When you first operate your machine after setup of after an extended period of disuse, run your machine at 3,000 to 3,500 rpm.for about 10minutes for thepurpose of breakin

面部油量的调整
1.调整插线杆台针杆曲柄轴部 ② 的油量时，转动油量调节销③进行调整。
2.调整销刻点 A 从面的位置向 B 方向转动，转动到拔出针杆曲柄板 ② 时，油量最小。
3.从图上所示的位置向 C 方向转动，当转到与针杆曲柄的正对面的位置时，油量最大。

Adjusting the amount of oil supplied to the face plate parts
1.Adjusting the amount of oil supplied to the threed takeup and needle bar crank ② by turning adjust ①.
2.The minium amount of oil is reached when marker dot A is brought close to needle bar crank ② by turning the adjust pin in direction B.
3.The maximum amount of oil is reached when marker dot A is brought to the position just opposite from the needle bar crank by turning the adjust pin in direction C.

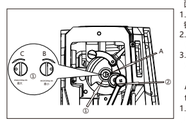

4. 面线的穿法 Threading the upper thread

注意 CAUTION
在穿线过程中，请切断电源。当误按动启动开关时，缝纫机动作会导致人员受伤。
Turn off the power switch before threading the upper thread.
The machine may operate it the treadle is depressed by mistake, which could result in injury.

在穿引面线之前转动手轮，抬高挑线杆①，这样会使穿线更加容易，并防止面线在缝纫开始时脱落

Turn the machine pulley and raise the thread take-up ① before threading the upper thread.
This will make threading easier and it will prevent the thread from coming out at the sewing start.

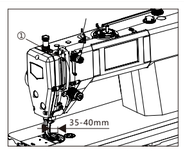

5. 机针和旋梭的同步 Adjusting the needle and rotary hook timing

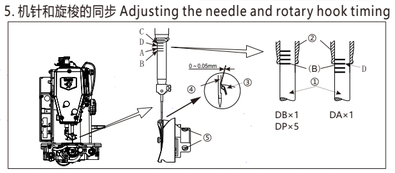

当针杆①从最低位置向上移动1.8mm (2.2mm用于MR(H)规格)，到达基线B与针杆轴套②下端对齐的位置时，旋梭尖③应与机针中心④对齐，如图所示。(此时,针孔上边缘与旋梭尖的距离为0.5-0.7mm)
1. 转动缝纫机手轮，使针杆①从最低位置上升到如图所示的基线B与针杆轴套②的下端保持对齐为止
2. 旋松固定螺钉⑤[3个]，使梭尖(3)与机针(4)的中心一致。此时旋梭尖③与机针④之间的间隙为0-0.05mm
3. 拧紧固定螺钉⑤[3个]

The tip of the rotary hook ③ should be aligned with the center of the needle ④ when the needle bar ① moves up 1.8mm (2.2mm for -M and -H specifications) from its lowest position to the position where reference ling B is aligned with the lower edge of the needle bar bush ② as shown in the illustration.
(the distance from the upper edge of the needle hole to the rotary hook tip will be 0.5 to 0.7mm at this time)
1.Turn the machine pulley to raise the needle bar ① from its lowest position until reference line B is aligned with the lower edge of the needle bar bush D ② as shown in the illustration.
2.Loosen the set screws ⑤ , and then align the tip of the rotary hook ③ with the center of the needle ④.
The distance between the tip of the rotary hook ③ and the needle ④ should be approximately 0-0.05mm.
3.Securely tighten the set screws ⑤.

6. 踏板的调整 Adjustment of the pedal

注意 CAUTION
为了防止意外启动造成的事故，请关掉电源后进行。
Turn off the power before starting the work so as to prevent accidents caused by abrupt start of the sewing machine.

1. 踏板角度的调整
1) 调节踏板连接杆的长度即可以调节踏板的角度：旋松螺钉①，上下移动上连接杆②和下连接杆③直至可以调节踏板连接杆的长度。
2) 调节完成后旋紧螺钉①。
2.踏板踩踏力的调整
视脚放在踏板上并向前轻踩踏板时，缝纫机进行低速缝纫。如感觉踩踏力比较轻时，将踩踏力调节弹簧④挂在踏板旋臂旋杆③的位置上进行调节(踩踏力以a为最小、b、c、d依次逐渐增大)。
3.踏板返回力的调整
1) 松开螺母②，旋转螺栓①调节踏板返回力: 拧紧螺栓①则踏板返回力将增大，拧松螺栓①则踏板返回力将减小。
2) 调节完踏板返回力后，请拧紧螺母②。

1.Adjusting the angle of treadle
1)Adjust the angle of treadle only by adjusting the length of treadle connecting rod: unscrew screw ①, and adjust the length of treadle connecting rod by moving upward/downward the upper connecting rod ② and lower connecting rod ③.
2)Screw down screw ① when adjustment is over.
2.Adjustment of the strength of pedalThe sewing machine run at a low speed when step forth on the panel slightly. If the strength is insufficient, hang the stepping adjustment spring ④ on the panel spiral arm driving lever ③ in order to adjust strength.(a is the minimum stepping strength ,b,c,d increase gradually)
3.Adjustment of stepping return strength
1)Loosing nut ② and turn bolt ⑦ to adjust stepping return strength : tighten bolt ⑦, the strength increases;loosen bolt ⑦, the strength decreases.
2)Tighten nut ② after adjusting stepping return strength.

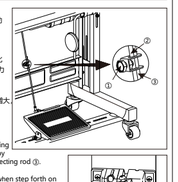

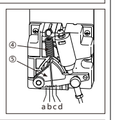

踏板操作 Pedal operation

1. 踏板有4级操作：
1) 向前轻踩踏板为低速缝纫(图示B)。
2) 再用力向前踩踏板到变为高速缝纫(图示A)。
3) 当脚不向踏板施力，则踏板回复到原始状态时，缝纫机停止运转(机针在上停针或下停针位置)(图示C)。
4) 再用力向后踩踏板为切线动作(图示E)。
5) 使用自动压脚提升装置时，在停止和切线之间增加一级开关D。向后轻踩踏板为压脚提升动作，继续向后强力踩踏板，压脚下降进行切线动作，再次进行压脚提升动作。

1.The treadle has 4 operation levels:
1)The machine runs at low sewing speed when you lightly depress the front part of the pedal. (as show in the picture B)
2)The machine runs at high sewing speed when you further depress the front part of the pedal.(as show in the picture A)
3)Penal back to the initial position when stop stepping on it and the machine stop working.(needle in the upper or down position)(as show in the picture C)
4)The machine trims threads when you fully depress the back part of the pedal.(as show in the picture A)
5)When the auto-lifer is used,one more operating switch is provided between the sewing machine stop switch and thread trimming switch. The presser foot goes up when you lightly depress the back part of the pedal(D),and if you further depress the back part,the thread trimmer is actuated.

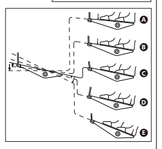

7-1. 标准调整 Standard adjustment

注意 CAUTION
只有经过训练的专业人员才能进行缝纫机的维修、保养和检查。
Maintenance and inspection of the sewing machine should only be carried out by a qualified.

与电气有关的维修、保养和检查请委托购买商店或电气专业人员进行。
Ask your dealer or a qualified electrician to carry out any maintenance and inspection of the electrical system

取下的安全保护装置，再次安装时，请务必安装在原位上，并检查能否正常地发挥作用
If any safety devices have been removed, be absolutely sure to re-install them to their origin positions and check that they operate correctly before using the machine

缝纫机头倒下或竖起时，请用双手进行操作。单手操作时因缝纫机的重量万一滑落易导致受伤。
Use both hands hold the machine head when tilting it back or returning it to its original position. If only one hand is used the weight of the machine head may cause your hand to slip, and your hand may get caught.

发生下列情况时，请关闭电源，并拔下电源插头，否则误踩下踏板时，缝纫机运作会导致受伤
· 检查、调整和维修
· 更换旋梭、切刀等易损零部件
Turn off the power switch and disconnect the power cord from the wall outlet at the following times. Otherwise the machine may operate if the treadle is depressed by mistake, which could result in injury.
· When carrying out inspection, adjustment and maintenance
· When replacing consumable parts such as the rotary hook and knife.

7-1. 调线量的调整

1.旋松螺钉①。
2.移动右线钩②进行调节：朝左方向(即A方向)移动，挑线量将会增加；反之朝右方向(即B方向)移动，挑线量将会减少。(右线钩上的刻线C与螺钉中心一致时为标准位置)。
3.调节完成后拧紧螺钉①。

1.Unscrewing the screw ①.
2.Move the right thread hook ② to adjust : the thread amount of thread take-up lever will increase if turned it towards left (A direction), while turning it to the right (direction B) and the thread amount of thread take-up lever will decrease accordingly.(The standard position is obtained when graduation line C on right thread hook is aligned to screw center.)
3.Remember to tight the screw ① after adjusting.

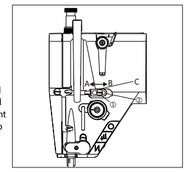

7-2. 送料牙倾斜的调节 Adjust the lean of feed dog

1.转动手轮，将送料牙④升到针板的最高位置。
2.将缝纫机放倒，并支到机头支柱上。
3.旋松牙架座②上的紧固螺钉①。
4.用螺丝刀转动偏心销③进行调节：将偏心销③向A方向转动，送料牙前端放下；向B方向转动，送料牙前端抬起(当送料牙升到针板的最高位置时，送料牙标准倾斜为偏心销③上的刻点C与牙架座②上的刻横D对齐，送料牙与针板平行)。
5.调节完成后拧紧牙架座②上的紧固螺钉①。

1.Turn the pulley until the feed dog ④ rises to the highest position.
2.Turn over the sewing machine head on the supporting bar.
3.Unscrewing the tightening screw ① in the teeth pedestal ②.
4.Adjust the eccentric pin ③ by screw driver: Fall front site of tooth feed when moving the eccentric pin ③ towards A, and raising it when move towards B.(When raising the tooth feedto the highest position, The standard lean position of feed dog is that mark C on eccentric pin ③ should be at the same level D with mark on the teeth pedestal ② and the feed dog should be parallel with needle plate.)
5.Remember to tighten the tightening screw① in the teeth pedestal ② after adjusting

· 为了防止起皱，可降低送料牙前端。
· 为了防止在重叠缝初时布料不一致(缝线不合)，可提高送料牙前端。
· 调节送料牙的倾斜度后，送料牙的高度也会发生改变，因此请重新调节送料牙的高度。
· In order to prevent puckering,lower the front of the feed dog.
· In order to prevent the material from slipping,raise the front of the feeddog.
· The height of the feed dog will change after the angle has been adjusted,so it will be necessary to readjust the height of the feed dog.

8. 线张力的调节 Adjusting the Tension of Stitch Thread

注意 CAUTION
取出梭芯套时，请关闭电源。
当误踩下踏脚板时，缝纫机动作会导致人员受伤。
Turn off the power switch before removing or inserting the bobbin case.
The machine may operate of the treadle is depressed by mistake, which could result in injury.

面线 Upper thread

底线 Lower thread

面线张力过小或底线张力过大。
Upper thread tension too weak or Lower thread tension too strong

面线张力过大或底线张力过小。
Upper thread tension too strong or Lower thread tension too weak

1.底线张力的调节
拉住从梭芯套中露出的线头，旋转调节螺钉①进行调节：旋紧调节螺钉①则底线张力变大，反之则底线张力变小。
1.Adjusting the tension of bobbin thread Hold the end of a thread which hanging from the bobbin case and use the adjusting rotating screw①to regulate. The tension of the bottom thread is become strong by tight the screw ①, loose the screw to make it weak.
底线张力调节标准：旋转调节螺钉①直至梭芯套以自重慢慢垂落。
The adjust standard of the bottom thread tension: Rotating the adjusting screw ① till the bobbin case can falling slowly by it' s own weight.

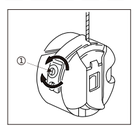

2.面线张力的调节
在底线张力调节之后，调节面线张力以使针脚均匀平整。
1) 使用压脚扳手将压脚放下。
2) 转动夹线螺母②进行调节：朝顺时针方向(即A方向)转动时，面线张力将增大；朝逆时针方向(即B方向)转动时，面线张力将减小。
2.Adjusting the tension of needle thread
After the lower thread tension has been adjusted,adjust the upper thread tension so thata good,even stitch is obtained.
1) Lower the presser foot by using the lifting lever.
2) Adjust by turning the tension nut ② : The tension of the upper thread will become strong when turning toward the clockwise(A), otherwise weak when toward anti-clockwise (B).

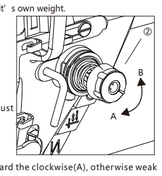

9. 关于旋梭部油量(迹)调整方法 Adjusting thr amount of oil(oil splashes) in the hook

油量（油迹）适合标准/Sample showing the appropriate amount of oil

从旋梭飞溅出来的油/Splashes of oil from the hook

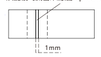

油量适当（小）
Appro priate aomunt of oil (small)

从旋梭飞溅出来的油/Splashes of oil from the hook

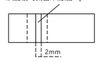

油量适当（大）
Appropriate amount of oil(large)

1.左图标杆根据缝制供需需要微调增减。但要注意不要过大增加或减少。油量过少时，会降环境较(发热)，油量过多时，会起污缝制品。
2.油量（油迹）应确认3次（3张）均无变化。

1.The amount of oil shown in the samples on the left should be finely adjusted in accordance with sewing processes. Be careful not to excessively increase/decrease the amount of oil in the hook. If the amount of oil is too small, the hook will be seized (the hook will be hot).If the amount of oil is too much, the sewing product may be stained with oil.
2.Adjust the amount of oil in the hook so that the oil amount (oil splashes) should not change while checking the oil amount three times (on the three sheets of paper).

11.踏板压力和行程 Pedal pressure and pedal stroke

注意
为了防止意外的启动造成的事故，请关掉电源后进行。
Waring
Turn OFF the power before starting the work so as to prevent accidents caused by abrupt start of the sewing machine.

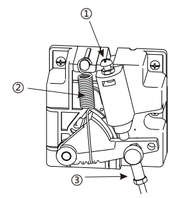

1.踏板踩踏压力的调整
(1).换成前踩踏弹簧①可以调整.
(2).把弹簧挂到左侧之后,压力变轻.
(3).挂到右侧之后变重.
2.踏板回踩力的调整
(1).用踏板回踩压力调节弹簧②可以调整.
(2).拧紧调节螺丝则压力变大.
(3).拧松调节螺丝则压力变小.
3.踏板踩踏行程的调整
(1).把连杆③插到右侧的孔里之后行程变大

1.Adjusment of pedal pedaling pressure
(1).It can be adjusted by replacing it with front tread spring①.
(2).After the spring is hung on the left, the pressure becomes lighter.
(3).Be hung into the right after the heavy.
2.Adjusment of pedal back stepping force
(1).It can be adjusted by stepping back on the pressure adjusting spring②with the pedal
(2).Tighten the adjusting screw to increase the pressure.
(3).Loosen the adjusting screw to reduce the pressure.
3.Adjustment of pedal pedaling stroke
(1).After inserting the connecting rod ③in to the hole on the right ,the stroke becomes larger.

7-2. 送料牙的高度 Adjustment of the Height of feed dog

1.转动手轮，将送料牙升到针板的最高位置。
2.将缝纫机放倒，并支到机头支柱上。
3.旋松抬牙叉形曲柄②上的紧固螺钉①。
4.转动抬牙叉形曲柄②进行调节：将抬牙叉形曲柄②向A方向转动，送料牙将变高；反之向B方向转动，送料牙将变低(当送料牙升到针板的最高位置时，中厚料机型送料牙距针板的标准高度为0.8-1.0mm，厚料机型的标准高度为1.1-1.3mm)。
5.调节完成后拧紧抬牙叉形曲柄②上的紧固螺钉①。

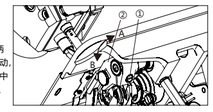

1.Turn the pulley until the feed dog rises to the highest position.
2.Turn over the sewing machine head on the supporting bar.
3.Unscrewing the tightened screw ① in thefeed lifting crank ②.
4.Rotating the feed lifting crank ② to make adjustment: the feed dog will be higher when the feed lifting crank ② is turn towards A direction; turn towards B direction the feed dog will be lower.
(When the feed dog in the highestposition, the standard height of the type of medium-heavy machine is 0.8~1.0mm and standard height of the heavy duty machine is 1.1~1.3mm) .
5.Remember to tighten the tightening screw ① in the feed lifting crank ② after adjusting.

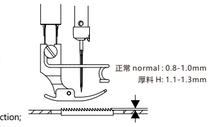

9. 关于旋梭部油量(迹)调整方法 Adjusting thr amount of oil(oil splashes) in the hook

注意
取出梭芯套时，请关闭电源。
WARNING
Be extremely careful about the operation of the machine, since the amount of oil has to be checked by turning the hook at a high speed.

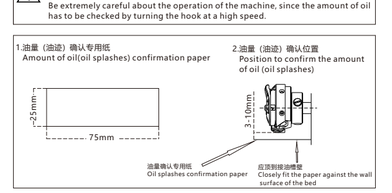

进行下列2的作业时，请卸下滑板，同时要充分注意手指不要碰到旋梭。
1.冷机头时，请进行3分钟左右的空运转（适当的断续运转）。
2.油量（油迹）确认专用纸在缝纫机转动后的状态下插入。
3.请确认油量的油面高度应在HIGH和LOW的范围之内。
4.确认油量（油迹）所需要的时间为5秒。

When carrying out the procedure described be low in 2, remove the slide plate and take extreme caution not to allow your fingers to come in contact with the hook.
1.If the machine has not been sufficiently warned up for operation, make the machine run idle for approximately three minutes(Moderale intermittent operation).
2.Place the amount of oil (oil splashes) confirmation paper under the hook while the sewing machine is in operation.
3.Confirm the height of the oil reservoir is within the range between "HIGH" and "LOW" .
4.Confimation of the amount of oil should be completed in five seconds.

旋梭油量调整/Adjusting the amount of oil

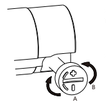

1.把下轴前端金属部件上的油量调节螺钉向"+"的方向（A方向）转动，油量变多，向"-"的方向（B方向）转动，油量变少。
2.油量调节螺钉调整后的油量，应空转30秒左右进行油量的确认。
1.Turning the oil amount adjustment screw attached on the hook driving shaft front bushing in the "+" direction(in direction A) will increase the amount of oil in the hook, or in the "-" direction (in direction B)will decrease it.
2.After the amount of oil in the hook has been properly adjusted with the oil amount adjustment screw, make the sewing machine run idle for approximately 30 seconds fo check the amount of oil in the hook.

9. 关于旋梭部油量(迹)调整方法 Adjusting thr amount of oil(oil splashes) in the hook

油量（油迹）适合标准/Sample showing the appropriate amount of oil

从旋梭飞溅出来的油/Splashes of oil from the hook

油量适当（小）
Appro priate aomunt of oil (small)

从旋梭飞溅出来的油/Splashes of oil from the hook

油量适当（大）
Appropriate amount of oil(large)

1.左图标杆根据缝制供需需要微调增减。但要注意不要过大增加或减少。油量过少时，会降环境较(发热)，油量过多时，会起污缝制品。
2.油量（油迹）应确认3次（3张）均无变化。

1.The amount of oil shown in the samples on the left should be finely adjusted in accordance with sewing processes. Be careful not to excessively increase/decrease the amount of oil in the hook. If the amount of oil is too small, the hook will be seized (the hook will be hot).If the amount of oil is too much, the sewing product may be stained with oil.
2.Adjust the amount of oil in the hook so that the oil amount (oil splashes) should not change while checking the oil amount three times (on the three sheets of paper).

1. 机壳分组件/Machine frame&miscellaneous cover components

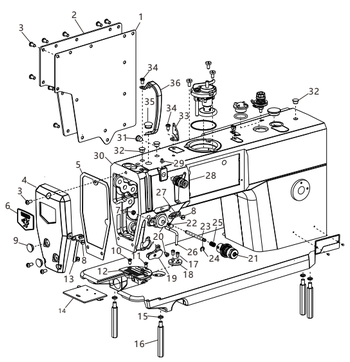

序 号 Ref.No.	物料号 Part.No.	名称 Name	Description	数量 Q'ty	备 注 Remark
1	11.002.00014	后盖板垫	Side plate gasket	1	
2	20.02.01.00012	后盖板	Side plate	1	
3	17.02.00102	螺钉	Screw SM11/64"×40 L=9	16	
4	20.02.01.00011	面板	Face plate	1	
5	11.002.00017	面板垫	Face plate gasket	1	
6	15.03.00009	商标牌	Trademark	1	
7	17.04.00019	六角螺母	Nut SM11/64"×40 L=3	1	
8	17.02.00083	螺钉	Screw SM11/64"×40 L=6	2	
9	11.001.00027	橡胶塞Φ9.9	Rubber plug	2	
10	17.02.00279	螺钉	Screw SM11/64"×40 L=9	1	
11	17.02.00095	螺钉	Screw SM11/64"×40 L=8.5	1	
12	11.002.00008	针板	Needle plate	1	
13	11.002.00002	左线钩	Arm thread guide left	1	
14	11.001.00026	推板组件	Side plate ASM	1	
15	17.05.00077	标准型弹簧垫圈5	Washer	4	
16	11.000.00001	底板支柱	Bed screw stud	4	
17	17.02.00104	螺钉	Screw SM11/64"×40 L=5.5	2	
18	1002A00002	做边塞座	Ruler plate	1	
19	11.002.00010	电子夹线器组件	Electromagnet	1	
20	17.01.00121	螺钉	Screw M4 L=5	1	
21	11.002.00004	夹线器组件	Thread take-up device	1	
22	17.01.00139	螺钉	Screw M6 L=10	1	
23	11.001.00062	松线辅钉	Tension release supporting pin	1	
24	17.05.00015	开口挡圈4	Side plate gasket	1	
25	11.001.00063	松线辅钉弹簧	Spring	1	
26	11.002.00001	缓线钩	Slow line hook	1	
27	11.001.00003	右线钩	Arm thread guide right	1	
28	11.002.00006	小夹线器部件	Thread take-up device	1	
29	17.01.00120	螺钉	Screw M4 L=4	1	
30		机壳组件	Chassis	1	
31	11.001.00008	橡胶塞Φ8.8	Rubber plug	1	
32	11.001.00009	橡胶塞Φ8.5	Rubber plug	3	
33	11.002.00005	三眼过线板	Thread tension guide	1	
34	17.02.00081	螺钉	Screw SM3/16"×28 L=6	2	
35	11.001.00012	橡胶塞Φ12.5	Rubber plug	1	
36	11.002.00009	挑线杆防护罩	Thread take-up lever cover	1	

3. 针杆、勾线分组件/Needle bar &Hook of driving shaft components

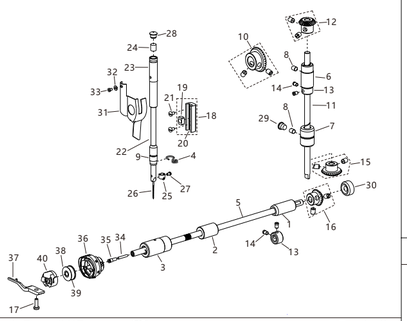

序 号 Ref.No.	物料号 Part.No.	名称 Name	Description	数量 Q'ty	备 注 Remark
1	11.001.00043	下轴后轴套	Bearing support	1	
2	11.002.00029	下轴中套	Bearing support	1	
3	11.002.00030	下轴前轴套	Bearing support	1	
4	11.001.00048	针杆下轴衬套线钩	Needle bar thread guide	1	
5	11.002.00031	下轴	Hook driving shaft	1	
6	11.002.00033	竖轴上轴套	Bearing support	1	
7	11.002.00032	竖轴下轴套	Bearing support	1	
8	17.02.00071	螺钉	Screw SM15/64"×28 L=7	2	
9	11.000.00020	针杆下轴衬套	Bearing support	1	
10	11.002.00034	上轴伞齿轮 螺钉	Gear Screw SM1/4×40° L=8	1 2	
11	11.002.00111	竖轴	Upright shaft	1	
12	11.002.00037	竖轴上伞齿轮 螺钉	Gear Screw SM1/4×40° L=8	1 2	
13	11.002.00036	挡圈	Thrust collar	2	
14	17.02.00069	螺钉	Screw SM1/4"×28 L=4	4	
15	11.002.00035	竖轴下伞齿轮 螺钉	Gear Screw SM1/4×40° L=8	1 2	
16	11.002.00038	下轴伞齿轮 螺钉	Gear Screw SM1/4×40° L=8	1 2	
17	17.02.00047	螺钉	Screw SM11/64"×40 L=10	1	
18	11.002.00041	梭壳	Bobbin case	1	
19	11.001.00134	滑块槽	Slider	1	
20	11.001.00129	滑块导轨	Guide rail	1	
21	17.02.00103	螺钉	Screw SM9/64"×40 L=7.5	2	
22	11.001.00049	针杆	Needle bar	1	
23	11.002.00039	针杆上衬套	Bearing support	1	
24	11.002.00026	毛毡	Wool felt	1	
25	11.001.00051	针杆线钩	Needle bar thread guide	1	
26	11.000.00033	Dbx1 14#机针	Needle DBx1 14#	1	
27	17.02.00043	螺钉	Screw SM1/8"×44 L=4	1	
28	11.001.00052	橡胶塞Φ8.4	Rubber plug	1	
29	11.001.00008	橡胶塞Φ8.8	Rubber plug	1	
30	11.001.00011	橡胶塞Φ20.9	Rubber plug	1	
31	11.001.00014	面部防油板	Oil stoper	1	
32	17.05.00070	平垫圈3	Washer	1	
33	17.02.00106	螺钉	Screw SM1/8"×44 L=4	1	
34	11.000.00065	下轴限油芯	Oil wick	1	
35	17.02.00004	限油螺钉	Screw SM3/16"×40 L=13	1	
36	11.002.00040	7.94BOTR旋梭	Hook 7.94BTR	1	
37	11.001.00054	旋梭定位钩	Positioning finger	1	
38	11.000.00070	梭芯 缠包线	Bobbin Thread	1	
39					

1. 机壳分组件/Machine frame&miscellaneous cover components

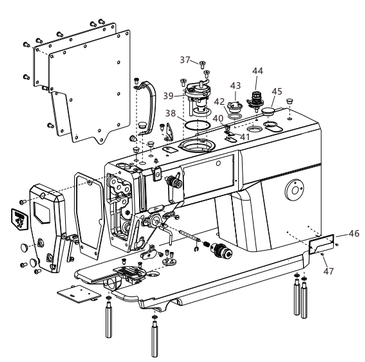

序 号 Ref.No.	物料号 Part.No.	名称 Name	Description	数量 Q'ty	备 注 Remark
37	17.01.00109	螺钉	Screw M5 L=10	3	
38	11.001.00019	绕线器密封垫	Gasker	1	
39	11.002.00007	绕线器组件	Bobbin wider ASM	1	
40	17.02.00269	螺钉	Screw SM9/64"×40 L=4.5	2	
41	11.001.00006	割线刀	Thread cutter	1	
42	11.001.00120	O型圈Φ24.5	O-ring	1	
43	11.001.00119	油窗	Oil window	1	
44	11.002.00016	底线夹线器组件	Thread take-up device	1	
45	11.001.00013	橡胶塞Φ20.5	Rubber plug	1	
46	15.03.00008	型号牌	Trademark	1	
47	15.03.00062	标牌铆钉2.5	Rivet	2	

4. 压脚分组件/Hang Lifter Components

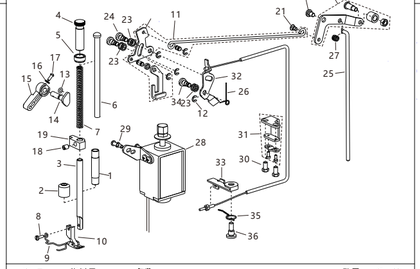

序 号 Ref.No.	物料号 Part.No.	名称 Name	Description	数量 Q'ty	备 注 Remark
1	11.002.00042	压杆衬套	Bearing support	1	
2	11.001.00067	压杆防油套	Oil proof sleeve	1	
3	11.001.00066	压杆	Pressure rod	1	
4	11.001.00072	调压螺钉	Screw SM1/2"×28 L=41	1	
5	11.001.00073	调压螺母	Nut SM1/2"×28 L=8	1	
6	11.001.00070	调压导杆	Pressure rod	1	
7	11.001.00071	调压簧	Spring	1	
8	17.02.00064	螺钉	Screw SM9/64"×40 L=11	1	
9	11.001.00069	护指架	Protect shelf	1	
10	11.002.00108	压脚	Presser foot ASM.	1	
11	11.014.00002	抬压脚前杠杆部件 抬压脚前杠杆 抬压脚升降板 抬压脚拉杆 前杠杆销 前杠杆长销 前杠杆长销套 开口挡圈5	Lifting lever link Lifting lever Plate Lifting lever connectin Pin Pin Pin sleeve Snap ring	1 1 1 1 1 1 1 2	
12	17.05.00017	开口挡圈5	Snap ring	3	
13	11.000.00113	O型圈	O-ring	1	
14	11.002.00046	压脚扳手凸轮	Trigger cam	1	
15	11.002.00048	压脚扳手	Cam	1	
16	11.002.00047	平垫圈	Washer	1	
17	17.02.00085	螺钉	Screw SM9/64"×40 L=9.5	1	
18	17.02.00089	螺钉	Screw SM1/4"×40 L=8	1	
19	11.001.00066	压杆导架	**Presser guide bar bracket**	1	
20	11.002.00050	抬压脚后杠杆组件 抬压脚后杠杆 平垫圈8 螺钉 螺母	Lifting lever link Lifting lever connecting rod Washer Screw SM15/64"×28 L=20.5 Nut SM15/64"×28 L=5	1 1 1 1 1	
21	17.02.00086	螺钉	Screw SM3/16"×32 L=7	1	
22	17.02.00087	螺钉	Screw SM15/64"×28 L=11	1	
23	11.002.00043	橡胶垫圈Φ8	Washer	6	
24	17.03.00002	螺纹销	Screw M8×1.0 L=15.5	2	
25	11.002.00049	抬压脚顶杆	Lifting lever connecting rod	1	
26	11.003.00017	松线顶板复位簧	Spring	1	
27	11.002.00093	抬压脚后杠杆弹簧	Spring	1	
28	18.06.00020	抬压脚电磁铁组件	Electromagnet components	1	
29	17.02.00102	螺钉	Screw SM3/16"×28 L=9	4	
30	17.02.00263	螺钉	Screw SM15/64"×28 L=11	1	
31	11.003.00023	下压板 压板 螺钉	**Platen** **Platen** Screw SM9/64**"×40 L=7.5**	1 1 2	
32	11.029.00002	松线顶板组件	Apical plate	1	
33	11.003.00021	松线座	Loose wire base	1	
34	17.03.00003	螺纹销	Screw M8×1.0 L=20	1	
35	11.003.00022	松线座复位簧	Spring	1	
36	17.02.00264	螺钉	Screw SM1/4"×28 L=21	1	

2. 上轴、挑线分组件/Main shaft&thread take-up components

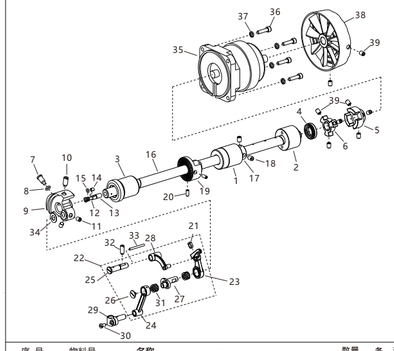

序 号 Ref.No.	物料号 Part.No.	名称 Name	Description	数量 Q'ty	备 注 Remark
1	11.002.00021	上轴中轴套	Bearing support	1	
2	11.002.00023	上轴后轴套	Bearing support	1	
3	11.002.00022	上轴前轴套	Bearing support	1	
4	11.001.00032	油封Φ15	Oil seal	1	
5	11.003.00011	外联轴器	Coupling	1	
6	11.003.00010	内联轴器	Coupling	1	
7	17.02.00078	螺钉	Screw SM9/32"×28L=14.5	1	
8	11.000.00038	O型圈	O-ring	1	
9	11.002.00025	针杆曲柄	Counter weight	1	
10	17.02.00077	螺钉	Screw SM9/32"×28 L=16	1	
11	17.02.00071	螺钉	Screw SM15/64"×28 L=7	1	
12	11.000.00039	曲柄油量调节销	Adjusting pin	1	
13	11.002.00026	曲柄油量限制毡	Felt	1	
14	11.011.00002	曲柄油量调节销套	Sleeve of adjusting pin	1	
15	11.000.00038	O型圈	O-ring	1	
16	11.002.00024	上轴	Main shaft	1	
17	11.002.00027	上轴挡圈	Thrust collar	1	
18	17.02.00089	螺钉	Screw SM1/4"×40 L=8	2	
19	11.002.00117	绕线器驱动轮	Wheel	1	
20	17.02.00261	螺钉	Screw SM11/64"×40 L=10	2	
21	11.001.00039	挑线杆防油套	Oil resistant cover	1	
22	17.01.00113	螺钉	Screw M6 L=8	8	
23	11.002.00094	挑线杆	Electromagnet	1	
24	11.002.00098	针杆连杆	Needle bar crank rod	1	
25	11.002.00099	铰链轴	Thread take-up crank shaft	1	
26	11.002.00100	螺钉	Screw SM9/64"×40 L=6	1	
27	11.002.00095	挑线曲柄	Needle bar crank	1	
28	11.002.00097	挑线连杆	Thread take-up bar	1	
29	11.002.00096	针杆连接柱	Needle bar holder	1	
30	17.02.00129	螺钉	Screw SM9/64"×40 L=6	1	
31	17.06.00001	轴承	Bearing	2	
32	17.02.00079	螺钉	Screw SM15/64"×28 L=15	1	
33	16.05.00023	挑线连杆销油线	Oil thread	1	
34	11.001.00038	针距曲柄护板	Protective plate	1	
35	18.01.02.00010	上轴电机	Motor	1	
36	17.01.00113	螺钉	Screw M5 L=20	4	
37	17.05.00077	弹簧垫圈	washer	4	
38	20.02.01.00013	手轮	Head wheel	1	
39	17.01.00113	螺钉	Screw M6 L=8	8	

5. 送料分组件/Feed Mechanism Components

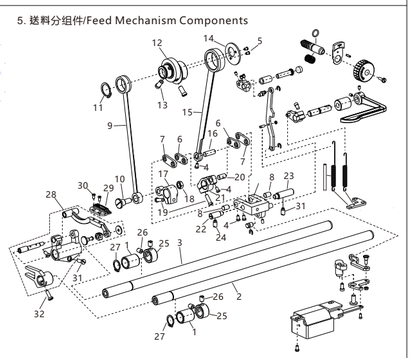

序 号 Ref.No.	物料号 Part.No.	名称 Name	Description	数量 Q'ty	备 注 Remark
1	11.001.00077	前轴套	Bearing support	2	
2	11.010.00018	抬牙轴	Feed driving shaft	1	
3	11.010.00017	送料轴	Feed driving shaft	1	
4	17.02.00084	螺钉	Screw SM9/64"×40 L=5	4	
5	17.02.00270	螺钉	Screw SM9/64"×40 L=6	2	
6	11.001.00096	短摆动板	Short link	2	
7	11.001.00095	长摆动板	Short link	2	
8	11.001.00094	摆动板销	Pin	2	
9	11.001.00092	抬牙连杆	Connecting rod	1	
10	17.02.00094	螺钉	Screw SM9/32"×28 L=22	1	
11	17.05.00007	轴用弹性挡圈20	Snap ring	1	
12	11.001.00036	送料偏心轮	Feed drive eccentric cam	1	
13	17.02.00096	螺钉	Screw SM1/4"×40 L=13	2	
14	11.000.00050	送料偏心轮盖板	Thrust cover	1	
15	11.002.00053	送料连杆	Connecting rod	1	
16	11.001.00091	送料连杆销	Pin	1	
17	11.001.00100	抬牙后曲柄	Lifting rocker	1	
18	17.04.00018	六角螺母	Nut SM1/4"×40 L=4.5	1	
19	17.02.00055	螺钉	Screw SM3/16"×28 L=15	1	
20	11.001.00098	送料曲柄销	Pin	1	
21	11.001.00099	送料曲柄	Feed rocker	1	
22	11.001.00104	摆动板座左销	Pin	1	
23	11.001.00105	摆动板座右销	Pin	1	
24	17.02.00082	螺钉	Screw SM15/64"×28 L=10.5	2	
25	11.000.00075	抬牙送料轴挡圈	Thrust collar	1	
26	17.02.00089	螺钉	Screw SM1/4"×28 L=8	4	
27	17.05.00008	轴用弹性挡圈15	Snap ring	2	
28	11.001.00109	牙架组件 牙架座 牙架销 螺钉 牙架 抬牙滑块销 抬牙叉形曲柄 抬牙滑块 抬牙滑块垫圈	Feed bar ASM. Feed bar driving crank Pin Screw SM11/64"×40 L=8 Feed bar Pin Lifting fork Slider Washer	1 1 1 1 1 1 1 1 1	
29	11.000.00082	送料牙	Feed dog	1	
30	17.02.00098	螺钉	Screw SM1/8"×44 L=6	2	
31	17.02.00276	螺钉	Screw SM3/16"×28 L=15.5	1	
32	17.02.00097	螺钉	Screw SM11/64"×40 L=10.5	1	

5. 送料分组件/Feed Mechanism Components

序 号 Ref.No.	物料号 Part.No.	名称 Name	Description	数量 Q'ty	备 注 Remark
33	11.003.00028	送料摆动摆座	Feed adjusting	1	
34	11.003.00028	销子	Pin	1	
35	11.003.00028	开口挡圈	Snap ring	1	
36	11.003.00028	螺钉	Screw	1	
37	11.001.00108	侧送料拉簧	Spring	1	
38	11.001.00093	摆动座复位簧	Spring	1	
39	11.000.00127	供油管	Oil tube	1	
40	11.001.00102	拉簧固定板	**Platen**	1	
41	17.02.00263	螺钉	Screw SM15/64"×28 L=11	2	
42	18.06.00001	侧链电磁铁组件	Thread trimmer solenoid asm	1	
43	11.003.00034	油泵连接柱	Oil pump support large	1	
44	17.01.00119	螺钉	Screw M6×1 L=8	2	
45	17.02.00047	螺钉	Screw SM11/64"×40 L=10	1	
46	17.02.00002	螺钉	Screw	1	
47	11.022.00004	自动倒送料连杆	**Platen**	1	
48	11.022.00005	自动倒送料曲柄	**Platen**	1	
49	17.04.00026	螺母	Nut SM11/64"×40 L=3.3	1	
50	17.02.00267	螺钉	Screw SM11/64"×40 L=12.5	1	
51	17.05.00017	开口挡圈	Snap ring	2	
52	17.02.00037	销子	Pin	1	
53	17.04.00026	螺母	Nut SM11/64"×40 L=3.3	1	
54	11.003.00037	侧送料连杆	Feed adjust rod	1	
55	11.001.00087	侧送调节器	Feed regulator	1	
56	17.02.00103	螺钉	Screw SM9/64"×40 L=7.5	1	
57	17.01.00117	螺钉	Screw M5×0.8 L=6	2	
58	11.003.00024	送料调节器套	Feed regulator bushing	1	
59	11.003.00025	送料调节销	Feed regulator pin	1	
60	11.001.00010	橡胶塞φ20	Rubber plug	1	
61	11.003.00027	侧送料连杆销	Pin	1	
62	11.001.00080	送料调节螺柱	Feed regulator Screw	1	
63	11.000.00086	O型圈	O-ring	1	
64	11.001.00084	止动销	Pin	1	
65	11.011.00005	送料距旋钮	Feed dial	1	
66	17.02.00101	螺钉	Screw SM3/16"×28 L=18	1	
67	17.02.00276	螺钉	Screw SM3/16"×28 L=15.5	1	
68	11.003.00029	侧送料曲柄	Feed reverse arm asm	1	
69	11.001.00106	侧送料轴	Shaft	1	
70	11.001.00107	O型圈	O-ring	1	
71	11.001.00078	侧送料轴套	Reverse feed support	1	
72	17.02.00268	螺钉	Screw SM15/64"×28 L=6	1	
73	20.02.01.00030	侧缝扳手	Reverse feed control lever	1	
74	11.022.00003	螺母	Nut	1	

8. 润滑分组件/Lubrication Components

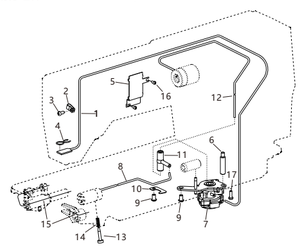

序 号 Ref.No.	物料号 Part.No.	名称 Name	Description	数量 Q'ty	备 注 Remark
1	11.000.00127	回油管组件	Oil return tube ASM	1	
2	11.001.00110	回油管夹	Feed driving shaft	1	
3	17.02.00081	复合槽盘头螺钉	Screw SM3/16"×28 L=6	1	
4	11.001.00111	回油毡夹	Holder	1	
5	11.002.00051	挡油板	Link	1	
6	11.001.00112	油泵支柱	Oil pump support large	1	
7	11.002.00084	油泵部件	Lubricating oil pump ASM	1	
8	11.002.00085	旋梭供油管	Hook driving shaft oil tube	1	
9	17.02.00099	螺钉	Screw SM9/64"×40 L=9	2	
10	11.001.00117	压线片	Platen	1	
11	11.001.00115	供油管接头	Rubber joint	1	
12	11.002.00086	上轴供油管	Main shaft oil tube	1	
13	17.02.00036	油量调节螺钉	Screw SM11/64 "×40 L=19	1	
14	11.002.00087	调节螺钉弹簧	Spring	1	
15	16.05.00023	抬牙送料轴油线	Oil thread	2	
16	17.02.00047	螺钉	Screw SM11/64"×40 L=10	2	

6. 剪线分组件/Thread Trimmer Components

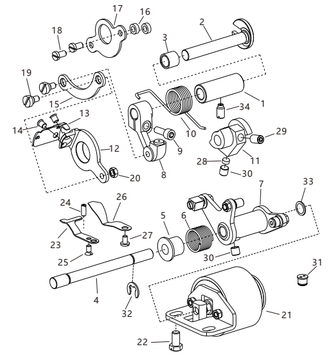

序 号 Ref.No.	物料号 Part.No.	名称 Name	Description	数量 Q'ty	备 注 Remark
1	11.002.00060	切线轴套	Bearing support	1	
2	11.002.00062	切刀驱动曲柄轴	Cutter driving crank shaft	1	
3	11.002.00061	驱动曲柄轴衬套	Short bush	1	
4	11.002.00063	切刀驱动轴	Thread cutter driving shaft	1	
5	11.002.00064	扭簧端盖	Spring cover	1	
6	11.002.00065	凸轮曲柄复位簧	Spring	1	
7	11.002.00066	切线凸轮曲柄组件	Thrimming cam crank asm	1	
8	11.002.00070	切刀驱动曲柄部件	Cutter driving crank arm	1	
9	17.02.00283	螺钉	Screw SM3/16"×28 L=14	1	
10	11.002.00068	驱动曲柄复位簧	Spring	1	
11	11.002.00071	剪线凸轮	Thread cutter cam	1	
12	11.002.00072	剪线刀架	Knife bracket	1	
13	11.002.00073	活动刀	Movable knife	1	
14	17.02.00258	螺钉	Screw SM11/64"×40 L=5.5	2	
15	11.002.00074	剪线连杆	Connecting rod	1	
16	11.002.00076	刀架压板垫柱	Washer	2	
17	11.002.00075	刀架压板	Knife bracket presser	1	
18	17.02.00044	螺钉	Screw SM11/64"×40 L=8	2	
19	17.02.00260	螺钉	Screw SM11/64"×40 L=9	2	
20	17.04.00019	螺母	Nut SM11/64"×40 L=3	1	
21	18.06.00021	剪线电磁铁组件	Thread trimmer solenoid asm	1	
22	17.02.00263	螺钉	Screw SM15/64"×28 L=11	1	
23	11.002.00078	定刀	Fixed knife	1	
24	17.02.00256	螺钉	Screw SM9/64"×40 L=9	1	
25	17.02.00259	螺钉	Screw SM9/64"×40 L=5.5	1	
26	11.002.00080	分线片	Needle guard patch	1	
27	17.02.00103	螺钉	Screw SM9/64"×40 L=7.5	1	
28	11.002.00079	剪线凸轮顶柱	Washer	1	
29	17.02.00266	螺钉	Screw SM1/4"×40 L=10	1	
30	17.02.00271	螺钉	Screw SM1/4"×40 L=6	2	
31	11.002.00082	电线衬套2孔	Rubber sleeve	1	
32	17.05.00016	开口挡圈6	Side plate gasket	1	
33	11.002.00067	缓冲垫φ8	Washer	1	

9. 附件/Auxiliaries

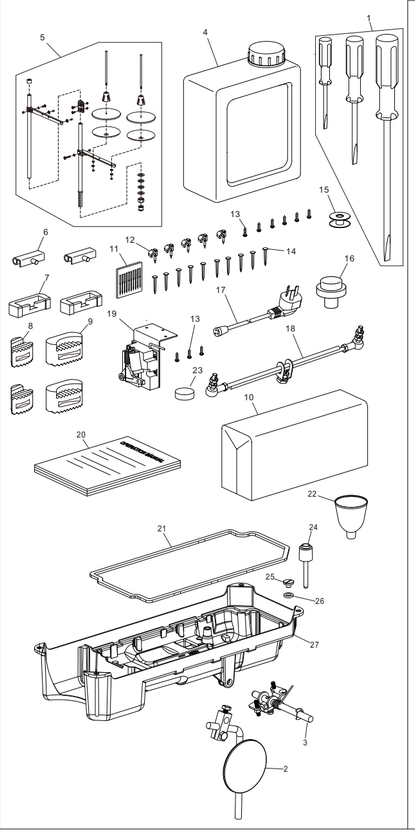

序 号 Ref.No.	物料号 Part.No.	名称 Name	Description	数量 Q'ty	备 注 Remark
1	15.03.00017	螺丝刀组件	Screw driver	1	
2	15.03.00015	膝靠组件	Knee pan ASM.	1	
3	15.03.00016	双向曲柄组件	Crank ASM.	1	
4	15.03.00019	油壶	Oil box	1	
5	15.03.00035	线架组件	Thread stand ASM.	1	
6	15.03.00014	机头连接钩	Head connecting hook	2	
7	15.03.00044	机头连钩勾座	Head connecting hook socket	2	
8	15.03.00042	机头小防震块	Oil reservoir seat	2	
9	15.03.00041	机头大防震块	Oil reservoir cushion	2	
10	15.03.00031	机头罩	Head cover	1	
11	11.000.00033	机针DBx1 14#	Needle DBx1 14#	1	
12	15.03.00065	电线夹	Cable clip	6	
13	15.03.00113	木螺钉	Wood screw	4	
14	16.05.00026	鞋钉	Spikes	9	
15	11.000.00070	梭芯	Bobbin	2	
16	15.03.00121	机头支柱	Head pole	1	
17	18.01.04.00016	电源线	Power cord	1	
18	15.03.00028	踏板连杆	Pedal control rod ASM.	1	
19	18.01.05.00001	控速器	Speed controller	1	
20	15.03.00114	电控说明书	Electric control manual	1	
21	15.03.00023	油盘垫	Oil reservoir gasket	1	
22	15.03.00066	漏斗	Funnel	1	
23	15.03.00122	磁铁	Magnet	1	
24	15.03.00013	抬压脚顶销	Knee lifter push rod	1	
25	17.02.00108	排油螺钉	Screw SM3/16"*28 L=9.5	1	
26	15.03.00025	O型圈Φ8.5	O-ring	1	
27	15.03.00020	油盘	Oil reservoir	1	

7. 电控分组件/Drive-by-wire Components

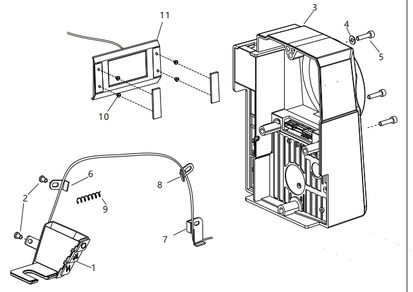

序 号 Ref.No.	物料号 Part.No.	名称 Name	Description	数量 Q'ty	备 注 Remark
1	11.014.00003	倒缝开关	Head light	1	
2	17.02.00081	螺钉	Screw SM3/16"×28 L=6	2	
3	23.01.00056	一体电机罩壳组件	Electric control panel	1	
4	17.05.00069	平垫圈5	Washer	1	
5	17.01.00113	螺钉	Screw M5 L=20	3	
6	11.002.00083	电线夹	Cable clip	1	
7	11.003.00005	电线压板	Cable clip	1	
8	11.001.00023	电线压板	Cable clip	1	
9	16.05.00025	电线扎带	Ribbon	1	
10	17.01.00140	螺钉	Screw M3 L=6	4	
11	18.01.01.00071	显示屏	Display ASM	1	