1. 机壳分组件/Machine frame&miscellaneous cover components

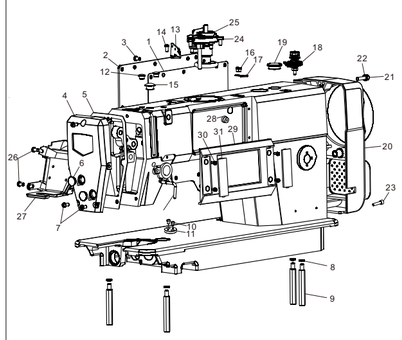

序号 Ref.No.	物料号 Part.No.	名称	Description	数量 Q'ty	备注 Remark
1	29.07.005	后窗板垫	Side plate gasket	1	
2	29.07.065	后窗板	Side plate	1	
3	02.09.033	螺钉	Screw	13	
4	29.07.064	面板	Face plate	1	
5	29.07.004	面板垫	Face plate gasket	1	
6	02.05.016	面板塞	Rubber plug	2	
7	02.09.026	螺钉	Screw	3	
8	23.302	弹簧垫圈	Washer	4	
9	01.01.001	底板支柱	Bed screw stud	4	
10	02.09.035	螺钉	Screw	2	
11	02.05.003	卷边器座	Ruler plate	1	
12	02.05.017	橡胶塞	Rubber plug	2	
13	29.01.179	三眼过线板	Thread tension guide	1	
14	02.09.007	螺钉	Screw	1	
15	02.05.013	橡胶塞	Rubber plug	1	
16	29.02.096	螺钉	Screw	2	
17	29.01.017	绕线切刀	Thread cutter	1	
18	29.01.053B2	绕线夹线器部件	Thread take-up device	1	
19	29.01.109	橡胶塞	Rubber plug	1	
20	30.01.096	电机罩壳	Cover Piece	1	
21	0000	垫圈	Washer	3	
22	29.02.097	螺钉	Screw	3	
23	0000	螺钉	Screw	1	
24	29.02.005	螺钉	Screw	3	
25	29.07.082	绕线器部件	Bobbin wider ASM.	1	
26	02.09.007	螺钉	Screw	1	
27	xxxxxx	机头灯部件	Head light	1	
28	29.01.229	橡胶塞	Rubber plug	1	
29	30.01.091	显示屏部件	Display ASM.	1	
30	29.07.087	螺钉	Screw	4	
31	30.01.091-2	盖板	Cover plate	2	

2. 上轴、挑线分组件/Main shaft&thread take-up components

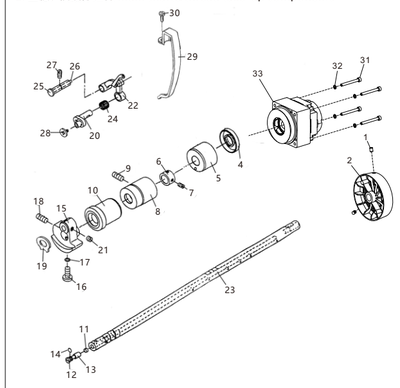

序号 Ref.No.	物料号 Part.No.	名称	Description	数量 Q'ty	备注 Remark
1	10020001	上轮	HAND WHEEL ASM	1	
2	10020002	上轮螺钉	SCREW 15/64-28 L=15	2	
3	10020003	上轴	MAIN SHAFT	1	
4	10021000	上轴油封组件	OIL SEAL COMPONENTS	1	
5	10020005	上轴后轴套	MAIN SHAFT BUSHING READ	1	
6	10020006	上轴挡圈	THRUST COLLAR ASM	1	
7	10020007	上轴挡圈螺钉	SCREW 9/64-40 L=6	2	
8	10020008	上轴中轴套	BUSHING INTERMEDIATE	1	
9	10020009	上轴中轴套螺钉	SCREW 15/64-28 L=7	1	
10	10020010	上轴前轴套	MAIN SHAFT FRONT BUSHING	1	
11	10020011	曲钙油量限制毡	ROLLER FELT	1	
12	10020012	曲钙油量调节销	OIL AMOUNT ADJUSTING PIN	1	
13	10020013	曲钙油量调节销套	OIL ADJUSTING COLLAR	1	
14	10020014	曲钙油量调节销O型圈	RUBBER RING	1	
15	10020015	针杆曲柄	COUNTER WEIGHT	1	
16	10020016	针杆曲柄定位螺钉	SCREW 9/32-28 L=16	1	
17	10020017	定位螺钉O型圈	RUBBER RING	1	
18	10020018	针杆曲柄紧固螺钉	SCREW 9/32-28 L=16	1	
19	10020019	针杆曲柄护板	cOUNTER WEIGHT GUARD	1	
20	10020020	挑线曲柄	NEEDLE BAR CRANK	1	
21	10020007	挑线曲柄定位螺钉	SCREW 1/4-40 L=6	2	
22	10020022	挑线杆分部件	THREAD TAKE-UP	1	
23	10020023	挑线杆防油套	RUBBER	1	
24	10020024	挑线杆滚针轴承	NEEDLE BEARING	1	
25	10020025	挑线连杆销	THREAD TAKE-UP CRANK SHAFT ASM	1	
26	10020026	挑线连杆销油线	THREAD TAKE-UP OIL WICK	1	
27	10020027	挑线连杆销螺钉	SCREW 15/64-28 L=10.5	1	
28	10020028	挑线曲柄左旋螺钉	LEFT SCREW	1	
29	10020029	挑线杆护罩	THREAD TAKE-UP LEVE COVER	1	
30	10020030	挑线杆护罩螺钉	SCREW3/16-28 L=6	1	
31	29.07.067	螺钉	Screw	4	
32	23.303	弹簧垫圈	washer	4	
33	30.01.094	上轴电机	Motor	1	

3. 针杆分组件 Needle bar components

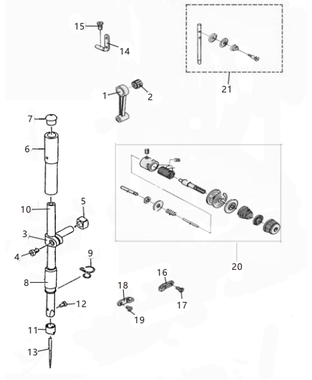

序号 Ref.No.	物料号 Part.No.	名称	Description	数量 Q'ty	备注 Remark
1	10030001	针杆连杆	NEEDLE BAR CRANK ROD	1	
2	10030002	针杆连杆滚针轴承	NEEDLE BEARING	1	
3	10030003	针杆连接柱	NEEDLE ROD HOLDER ASM	1	
4	10030004	针杆连接柱螺钉	SCREW 9/64×40 L=6	1	
5	10030005	针杆连接柱滑块	SLIDE BLOCK	1	
6	10030006	针杆上轴套	NEEDLE BAR BUSHING UPPER	1	
7	10030007	针杆上轴套孔塞	CAP	1	
8	10030008	针杆下轴套	NEEDLE BAR BUSHING LOWER	1	
9	10030009	针杆下轴套线勾	NEEDLE BAR THREAD GUIDE	1	
10	10030010	针杆	NEEDLE BAR	1	
11	10030011	针杆线勾	NEEDLE BAR THREAD GUIDE	1	
12	10030012	支针螺钉	SCREW 1/8×44 L=4.5	1	
13	10030013	机针	NEEDLE DB×1 #14	1	
14	10030014	二眼线勾	TWO HOLE THREAD GUIDE	1	
15	10030015	二眼线勾螺钉	TWO HOLE THREAD GUIDE SCREW	1	
16	10030016	右线勾	ARM THREAD GUIDE A	1	
17	10030017	右线勾螺钉	SCREW	1	
18	10030018	左线勾	ARM THREAD GUIDE B	1	
19	10030017	左线勾螺钉	SCREW 11/64-40 L=6	1	
20	10031000	夹线器组件	NIPPRING THREAD WARE ASM	1	
21	10032000	过线器部件	NIPPRING THREAD WARE ASM	1	

4. 压脚分组件/Hang Lifter Components

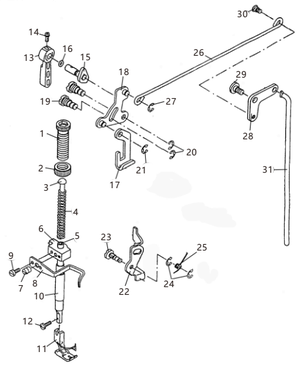

序号 Ref.No.	物料号 Part.No.	名称	Description	数量 Q'ty	备注 Remark
1	10040001	调压螺钉	PRESSER SPRING REGULATOR	1	
2	10040002	调压螺母	PRESSER ADJUSTING SCREW NUT	1	
3	10040003	调压导杆	PRESSER GUIDE BAR	1	
4	10040004	调压弹簧	PRESSER ADJUSTING SPRING	1	
5	10040005	压杆导架	PRESSER BAR GUIDE BRACKET	1	
6	10040006	压杆	PRESSER BAR	1	
7	10040008	座线调节勾	PRESSER BAR THREAD GUIDE	1	
8	10040007	压杆导架螺钉	SCREW 1/4-40 L=8	1	
9	10040009	座线调节勾螺钉	SCREW 9/64-40 L=9	2	
10	10040010	压杆轴套	PRESSER BAR BUSHING LOWER	1	
11	10041000	压脚组件	PRESSER FOOT ASM	1	
12	10040012	活压脚螺钉	SCREW 9/64-40 L=10.5	1	
13	10040013	压脚扳手	HAND LIFTER	1	
14	10040014	压脚扳手螺钉	SCREW	1	
15	10040015	压脚扳手凸轮	HAND LIFTER CAM ASM	1	
16	10040016	压脚扳手轴O型圈	RUBBER RING	1	
17	10040017	压脚升降板	LIFTING LEVER	1	
18	10040018	抬压脚前杠杆部件	HAND LIFTER LINK	1	
19	10040019	前杠杆螺纹销	LINK SHAFT	2	
20	10040020	前杠杆螺纹销开口挡圈	E-RING	3	
21	10040021	升降板连接特制开口挡圈	E-RING	1	
22	10040022	松线顶板	THREAD TENSION RELEASE WIRE	1	
23	10040023	松线顶板螺纹销	TENSION RELEASE SHAFT	1	
24	10040024	松线顶板螺纹销开口挡圈	E-RING	2	
25	10040025	松线顶板复位弹簧	TENSION RELEASE RETURN SPRING	1	
26	10040026	抬压脚拉杆	KNEE LIFTING CROSS ROD	1	
27	10040027	拉杆开口挡圈	E-RING	1	
28	10040028	抬压脚后杠杆	LIFTING LEVER LINK	1	
29	10040029	后杠杆轴位螺钉	HINGE SCREW D=7.24 H=3.3	1	
30	10040030	抬压脚拉杆螺钉	HINGE SCREW	1	
31	10040031	抬压脚顶杆	KNEE LIFTER CONNECTING ROD	1	

5. 勾线分组件/Hook of driving shaft Components

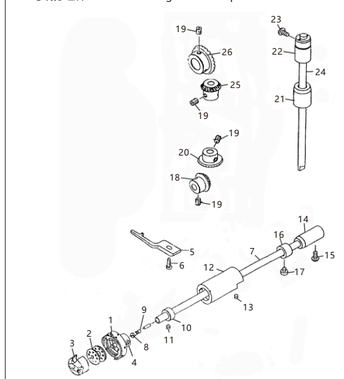

序号 Ref.No.	物料号 Part.No.	名称	Description	数量 Q'ty	备注 Remark
1	10050001	旋梭	HOOK ASM	1	
2	10050003	梭子	BOBBIN CASE ASM	1	
3	10050002	梭芯	BOBBIN	1	
4	10050004	旋梭紧固螺钉	SCREW	2	
5	10050005	旋梭定位勾	BOBBIN CASE HOLDER	1	
6	10050006	旋梭定位勾螺钉	SCREW 11/64×40 L=9.5	1	
7	10050007	下轴	LOWER SHAFT	1	
8	10050008	下轴限油芯螺钉	OIL SEAL SCREW	1	
9	10050009	下轴限油芯	OIL WICK	1	
10	10050010	下轴挡油圈	THRUST COLLAR ASM	1	
11	10050011	下轴挡油圈螺钉	SCREW 11/64×40 L=3.5	2	
12	10050012	下轴前轴套部件	LOWER SHAFT FRONT METAL	1	
13	10020009	下轴前轴套螺钉	SCREW	1	
14	10050014	下轴后轴套	BUSHING READ	1	
15	10010006	下轴后轴套螺钉	SCREW 3/16×28 L=28	1	
16	10050016	下轴挡圈	THRUST COLLAR ASM	1	
17	10050017	下轴挡圈螺钉	SCREW 11/64×40 L=4.6	2	
18	10050018	下轴伞齿轮（小）	PINION ASM (SMALL)	1	
19	10050019	伞齿轮螺钉	SCREW 1/4×40 L=8	8	
20	10050020	竖轴下伞齿轮（大）	GEAR ASM LARGE (BIG)	1	
21	10050021	竖轴下轴套	UPPRING SHAFT BUSHING LOWER	1	
22	10050022	竖轴上轴套	UPPRING SHAFT BUSHING LOWER	1	
23	10050023	竖轴上轴套螺钉	SCREW 12/64×28 L=9	1	
24	10050024	竖轴	UPRIGHT SHAFT	1	
25	10050025	竖轴上伞齿轮（小）	PINION ASM (SMALL)	1	
26	10050026	上轴伞齿轮（大）	GEAR & PINION ASM UPPER (BIG)	1	

6. 送料分组件/Feed Mechanism Components

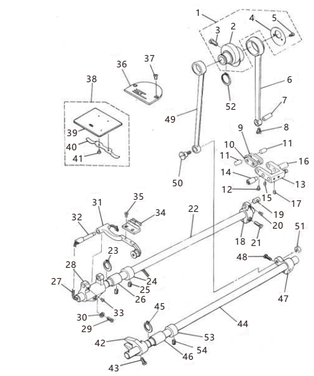

序号 Ref.No.	物料号 Part.No.	名称	Description	数量 Q'ty	备注 Remark
1		送料偏心轮组件	FEED DRIVE ECCENTIRIC CAM ASM	1	
2	10050027	送料偏心轮	FEED DRIVE ECCENTIRIC CAM	1	
3	10050028	偏心轮螺钉	FEED DRIVE ECCENTIRIC CAM SCREW	2	
4	10050029	送料偏心轮盖板	THRUST COLLAR	1	
5	10050030	偏心轮盖板螺钉	SCREW 9/64-40 L=6	4	
6	10050031	送料连杆	ROCKER SHAFT CONNECTING ROD	1	
7	10050032	送料连杆肖	WALKING FOOT PIN C	1	
8	10050033	送料连杆肖螺钉	SCREW 9/64-40 L=6	1	
9	10050034	送料长摆动板	CONNECTING LINK A	2	
10	10050035	送料短摆动板	CONNECTING LINK B	2	
11	10050036	短摆动板连接肖	WALKING FOOT PIN A	2	
12	10050037	摆动板座连接销螺钉	SCREW	2	
13	10050038	送料摆动板座	WALKING FOOT ADJUSTING LINK	1	
14	10050039	摆动板座连接左销	ADJUSTING LINK FULCRUM SHAFT A	1	
15	10020027	左销螺钉	SCREW 15/64-28 L=7	1	
16	10050041	送料摆动板座右销	ADJUSTING LINK FULCRUM SHAFT A	1	
17	10020027	右销螺钉	SCREW 15/64-28 L=7	1	
18	10050043	送料曲柄	FEED ROCKER SHAFT CRANK ASM	1	
19	10050044	送料曲柄肖	WALKING FOOT PIN B	1	
20	10050045	送料曲柄肖螺钉	SCREW 9/64-40 L=6	1	
21	10050046	送料曲柄螺钉	SCREW 3/16-28 L=14	1	
22	10050047	送料轴	FEED ROCKER SHAFT	1	
23	10050048	送料轴轴用挡圈	RETAINING RING 13.8	1	
24	10050049	送料轴挡圈	THRUST COLLAR ASM	1	
25	10020007	送料轴挡圈螺钉	SCREW 1/4-40 L=6	2	
26	10050051	送料轴前轴套	FEED ROCKER SHAFT BUSHING	1	
27	10050052	送料轴油线	OIL WICK	1	
28	10050053	牙架座	FEED BAR CRANK ASM	1	
29	10050054	牙架座螺钉	SCREW 3/16-28 L=14	1	
30	10050055	牙架座螺钉垫圈	WASHER 4.8×8.4×0.8	1	

7. 送布调节分组件 /Cloth feeding adjustment Components

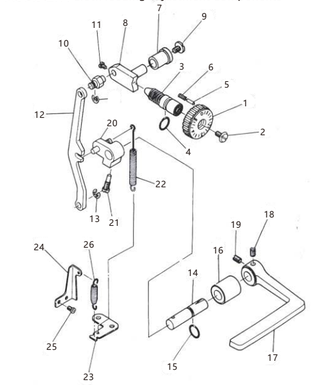

序号 Ref.No.	物料号 Part.No.	名称	Description	数量 Q'ty	备注 Remark
1	10050080	送料距旋钮	FEED DIAL	1	
2	10050081	送料距旋钮螺钉	SCREEW 3/16-40 L=6	1	
3	10050082	送料调节螺柱	FEED REGULATOR SCREW	1	
4	10050083	送料调节螺柱（O）型圈	RUBBER RING	1	
5	10050084	送料距儆合肖	FEED ADJUST PIN	1	
6	10050085	送料距儆合簧	FEED ADJUST SPRING	1	
7	10050087	送料调节器轴套	FEED REGULATOR BUSHING	1	
8	10050086	送料调节器	FEED REGULATOR	1	
9	10050088	送料调节器轴端螺钉	SCREEW 3/16-28 L=7	1	
10	10050089	倒送料连杆肖	FEED REGULATOR PIN	1	
11	10050090	倒送料连杆肖螺钉	SCREEW 9/64-40 L=6	2	
12	10050091	倒送料连杆	FEED REGULATOR CONNCTING ROD	1	
13	10050092	倒送料连杆挡圈	E-RING	2	
14	10050093	倒送料轴	FEED REVERSE SHAFT	1	
15	10050094	倒送料轴O型圈	RUBBER RING	1	
16	10050095	倒送料轴轴套	FEED LEVER METAL	1	
17	10050096	倒送料扳手	REVERSE FEED CONTROL LEVER	1	
18	10050097	倒送料扳手定位螺钉	SCREW	1	
19	10020009	倒送料扳手螺钉	SCREW	1	
20	10053000	倒送料曲柄部件	FEED REVERSE ARM ASM	1	
21	10050100	倒送料曲柄螺钉	SCREW	1	
22	10050101	倒送料拉簧	FEED REVERSE SPRING	1	
23	10050102	拉簧固定板	FEED SPRING HOOK	1	
24	10050103	摆动板座复位板	ADJUSTING LINK SPRING GUIDE	1	
25	10050104	复位板螺钉	SCREW 11/64-40 L=5	2	
26	10050105	摆动杆座复位簧	SPRING	1	

8. 润滑分组件/Lubrication Components

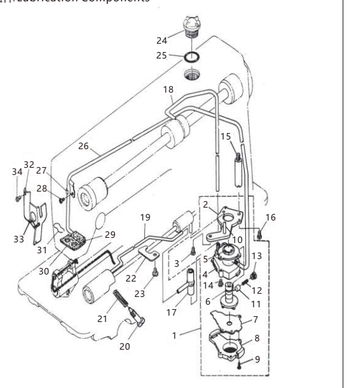

序号 Ref.No.	物料号 Part.No.	名称	Description	数量 Q'ty	备注 Remark
1	10061000	油泵部件	LUBRICATING OIL PUMP ASM	1	
2	10061001	油泵安装板	OIL PUMP INSTALLING BASE	1	
3	10061002	油泵安装螺钉	SCREW 15/64"×28 L=9	3	
4	10061003	油泵体	OIL PUMP	1	
5	10061004	油泵体衬套		1	
6	10061005	油泵叶轮	OIL PUMP IMPELLER	1	
7	10061006	叶轮托板	OIL PUMP IMPELLER COVER	1	
8	10061007	油泵盖	LUBRICATING OIL PUMP COVER	1	
9	10061008	油泵盖螺钉	SCREW D=3 L=10	3	
10	10060001	下轴供油管	MAIN SHAFT OIL TUBE	1	
11	10061009	回油柱塞	PLUNGER	1	
12	10061010	柱塞弹簧	PLUNGER SPRING	1	
13	10061011	柱塞螺钉	PLUNGER SCREW	1	
14	10061012	油泵螺钉	SCREW 15/64-28 L=9	1	
15	10060002	油泵支柱螺钉	SCREW	1	
16	10050006	螺柱连接螺钉	SCREW	1	
17	10061013	供油管接头	RUBBER JOINT	1	
18	10060004	上轴供油管	MAIN SHAFT OIL TUBE	1	
19	10060005	旋梭供油管	OIL TUBE	1	
20	10060006	旋梭油量调节螺钉	OIL ADJUSTING SCREW	1	
21	10060007	旋梭油量调节簧	SPRING	1	
22	10060008	旋梭供油管压板	TUBE HOLDER (LOWER)	1	
23	10060009	压板螺钉	SCREW 15/64-28 L=9	1	
24	10060010	油窗	OIL SIGHT WINDOW	1	
25	10060011	油窗O型圈	RUBBER RING	1	
26	10060012	回油管	OIL TUBE	1	
27	10060013	回油管夹	HOLDER	1	
28	10020030	回油管夹螺钉	SCREW 3/16-28 L=6	1	
29	10060015	回油除尘毡	ANTI DUST TUBE HOLDER	1	
30	10060016	回油毡		1	
31	10060017	回油毡夹	OIL FELT PRESSER	1	
32	10060018	面部防油板		1	
33	10060019	防油板油线	OIL WICK	1	
34	10060020	防油板螺钉	SCREW 1/8"×44 L=12.5	1	

9. 油盘分组件/Oil Reservoir Components

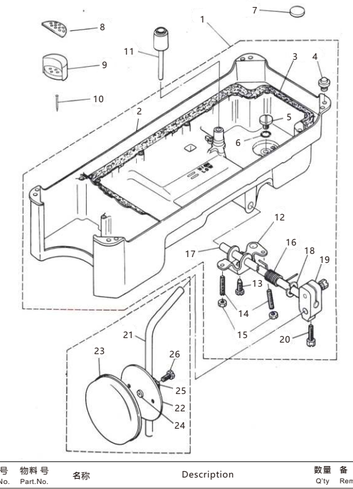

序号 Ref.No.	物料号 Part.No.	名称	Description	数量 Q'ty	备注 Remark
1	10071000	油盘部件	OIL RESERVOIR ASM	1	
2	10071001	油盘	OIL RESERVOIR	1	
3	10071002	油盘垫	OIL RESERVOIR GASKET	1	
4	10071003	机头座垫	RUBBER CUSHION	4	
5	10020032	排油孔螺钉	SCREW 5/16-24 L=7	1	
6	10071005	排油孔螺钉（O）型圈	RUBBER RING	2	
7	10070001	油盘磁铁	MAGNET	1	
8	10070002	油盘座垫	OIL RESEROIR RUBBER CUSHION	2	
9	10070003	油盘支架	OIL RESEROIR RUBBER CUSHION	2	
10	10070004	油盘座钉	WOOD SCREW	4	
11	10070005	抬压脚顶销	KNEE LIFTER PUSH ROD	1	
12	10070006	抬压脚双向曲柄	KNEE LIFTING ROTATING ARM	1	
13	10070007	双向曲柄螺钉	SCREW M6 L=17.5	1	
14	10070008	双向曲柄限位螺钉	SCREW M6 L=30	2	
15	10070009	双向曲柄限位螺母	NUT M6	2	
16	10070010	双向曲柄扭簧	SPRING	1	
17	10070011	抬压脚轴	KNEE PRESS CROSS SHAFT	1	
18	10070012	抬压脚座开口挡圈	E-RING 10	1	
19	10070013	抬压脚操纵杆接头	VERTICAL SHAFT FITTING ARM	1	
20	10070014	操纵杆接头螺钉	SCREW	2	
21	10070015	操纵杆	KNEE PAD UPRIGHT SHAFT	1	
22	10070016	操纵板	KNEE PAD PLATE	1	
23	10070017	操纵杆软垫	KNEE PAD PLATE COVER	1	
24	10070018	操纵杆垫	KNEE PAD PLATE RUBBER	1	
25	10070019	操纵杆接头	KNEE PAD PLATE SUPPORT	1	
26	10070020	接头螺钉	SCREW M6 L=12	1	

10. 附件/Auxiliaries

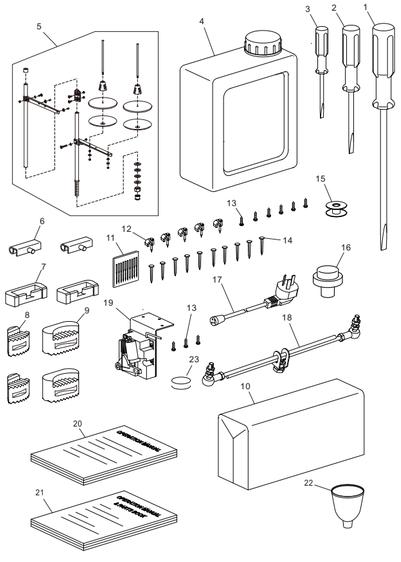

序号 Ref.No.	物料号 Part.No.	名称	Description	数量 Q'ty	备注 Remark
1	01.09.023-1	大螺丝刀	Screw driver	1	
2	01.09.023-2	中螺丝刀	Screw driver	1	
3	01.09.023-3	小螺丝刀	Screw driver	1	
4	01.09.020	油壶(带油)	Oil box	1	
5	01.09.021	二线架部件	Thread stand ASM.	1	
6	01.09.009	机头连接钩部件	Head connecting hook	2	
7	29.01.234	机头连接钩座	Head connecting hook socket	2	
8	29.01.235	油盘支座	Oil reservoir seat	2	
9	29.01.236	油盘座垫	Oil reservoir cushion	2	
10	23.64	机头罩	Head cover	1	
11	02.04.029	机针DBx1 14#	Needle DBx1 14#	10	
11	29.01.200	机针DPx1 18#	Needle DPx5 18#	10	H
12	23.304	电线夹	Cable clip	15	
13	23.305	木螺钉	Wood screw	9	
14	23.306	鞋钉	Spikes	10	
15	01.07.003	梭芯	Bobbin	1	
16	29.07.001	机头支柱	Head pole	1	
17	30.01.049	电源线	Power cord	1	
18	30.01.090-2	踏板连杆	Pedal control rod ASM.	1	
19	30.01.028	控速器	Speed controller	1	
20	30.01.090-3	电控说明书	Electric control manual	1	
21	23.141	零件手册	Parts book	1	
22	12.05.172	漏斗	Funnel	1	
23	23.308	磁铁	Magnet	1	