High-speed Lockstitch Sewing Machine

Operation Manual
Parts Book

好推手广告有限公司
HTS ADVERTISING CO.,LTD.

目　　录
CONTENTS

主要零件名称/NAMES OF MAIN PARTS……1
装　　设/INDYSLLATION ……3
[1] 动力车板
Power table ……3
[2] 油盘与膝控装置安装方法
To attach the oil and knee lifter ……4
[3] 橡皮底座与防震橡皮安装方法
To attach the rubber bases and cushions ……5
[4] 压脚提升连杆装上护板及膝控装置方法
Installing the skirt,knee lifer complying bar……5
[5] 机头安装及皮皮带调节方法
To install the machine head · belt tension ……6
[6] 绕线器安装法
To attach the bobbin winder……6
[7] 线架安装方法
To attach the thread unwinder ……6
[8] 装设皮带护盖前注意事项
Precautions before installing the belt cover……7
润　　滑/LUBRICATION
[1] 润滑
Lubrication ……8
[2] 上油
Oiling ……9
正确的操作/CORRECT OPERATION
[1] 接上针
To Attach the needles ……10
[2] 梭心更换方法
To remove the bobbin ……10
[3] 绕底线的方法
To wind the lower thread ……11
[4] 梭心放置方法
To attach the bobbin……12
[5] 穿底线
Lower threading ……12
[6] 穿上线
Upper threading ……13
[7] 压脚压力的调整
Adjustment of the presser foot pressure ……14
[8] 针目粗细的调整(842)
Adjustment of the stitch length ……14
[9] 针的松紧度
Thread tension ……15
[10] 停止针杆
To stop the needle bars……17

标准调整方法/STANDARD ADJUSTMENTS ····· 19
1 机针及送布时间的调整
Adjustment of the needles and feed-timing ····· 19
2 机针及回转梭头时配的调整
Adjustment of the needles and rotary-hook timing ····· 20
3 压脚高度的调整
Adjustment of the presser foot height ····· 23
4 送布齿高度的调整
Adjustment of the feed dog height ····· 23
5 如何变更针杆组件
How to change gauges ····· 24
故障检查指南/TROUBLESHOOTING GUIDE ····· 27
零件目录/PARTS CONTENTS
A.机壳部分/Machine body ····· 28
E.上轴机构/Upper shaft mechanism ····· 30
E.针杆机构/(845)/Needle bar rocking mechanism(845) ····· 32
C.压脚机构/Presser foot mechanism ····· 34
D.送布机构/Feed mechanism ····· 36
G.送料轴机构（切线用）/Feed shaft mechanism ····· 38
K.下轴机构/Feed shaft mechanism ····· 39
H1.旋梭机构/Rotary hook mechanism ····· 40
J.润滑机构/Lubrication ····· 42
L1.过线压线机构/Thread mechanism ····· 46
M.针组零件/Gauge parts ····· 48
Z.附属部分/Accessories ····· 49
Z.附件部分/Accessories ····· 51
勾线旋梭厂牌及规格对照表/Application form for hook"Brand"and"Specification" ····· 53
针距组零件明细表/Gauge parts list ····· 54~57

主要零件名称

NAMES OF MAIN PARTS

842 双针送料平缝机
Twin Needle,Needle Feed Lockstitch Machine

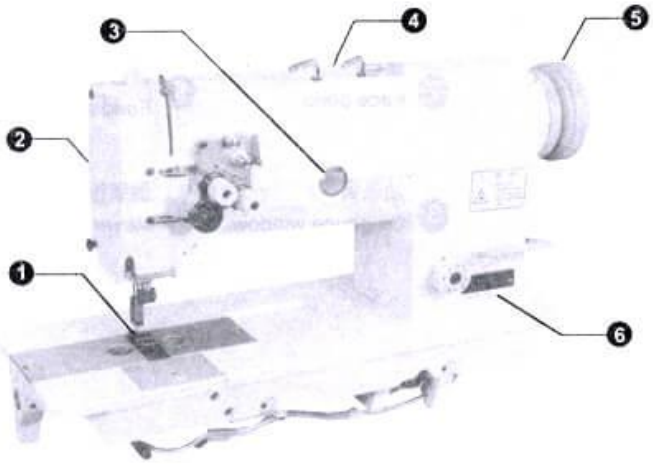

1. 针板 Needle plate
2. 面板 Face plate
3. 油表窗 Oil gauge window
4. 加油口 Oil inlet
5. 皮带轮 Pulley
6. 型号板 Model plate

842 双针送料平缝机附倒缝
Twin Needle,Needle Feed Lockstitch Machine with Reverse Feed

842 双针下送料平缝机附倒缝
Twin Needle,Drop Feed, Lockstitch Machine

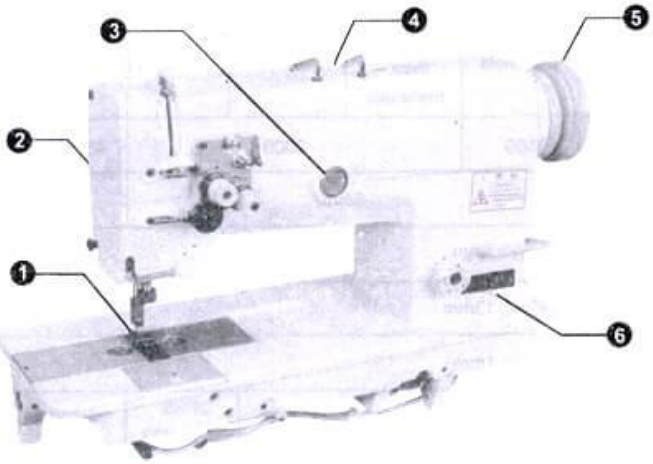

1. 针板 Needle plate
2. 面板 Face plate
3. 油表窗 Oil gauge window
4. 加油口 Oil inlet
5. 针数调整盘 Feed adjustment dial
6. 倒缝扳手 Reverse feed lever

845 双针送料平缝机附角缝
Twin Needle,Needle Feed Lockstitch Machine with Reverse Feed

845 双针下送料平缝机附角缝
Twin Needle,Drop Feed, Lockstitch Machine

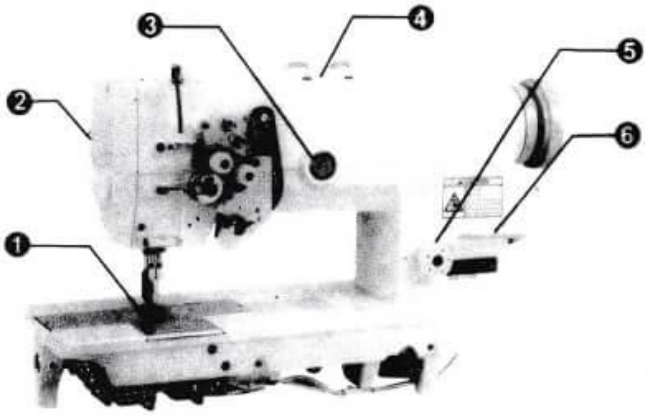

❶ 针板 Needle plate
❷ 面板 Face plate
❸ 油表窗 Oil gauge window
❹ 加油口 Oil inlet
❺ 针数调整盘 Feed adjustment dial
❻ 倒缝扳手 Reverse feed lever

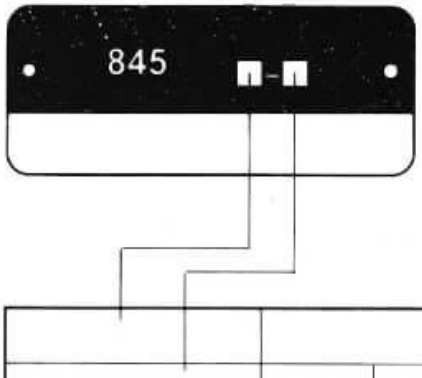

		842				845				
		-3	-5	-3	-5	-3	-5	-7	-1	-1
Use		For medium-thick-materials	For thick materials	For medium-thick-materials	For thick materials	For medium-thick-materials	For thick materials	For thick materials	For thick materials	For thick materials
Sewing speed (spm)		4500	3500	4500	3500	3000			4500	3000
Stitch length		4mm	5mm	4mm	5mm				4mm	
Presser foot height	Presser foot litter	7mm								
	Knee lifter	13mm								
Feed dog height		1mm								
Needles		DPX5 #11~#22						DPX5 #16~#23	DPX5 #9~#14	
Needle feed mechanism		Standard							Not available	
Single needle stop device		Not available				Standard			Not available	Standard

Note:The needle feed mechansim is not provided on 845 models.
注：845 不提供送针机械装置。

装设

INSTALLATION

1 动力车板 Power Table

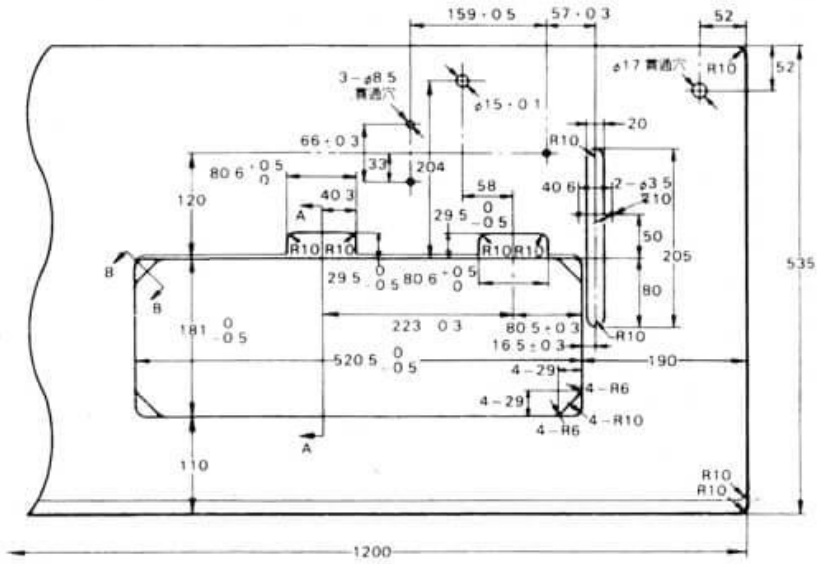

A-A交叉段
A–A cross section

B-B交叉段
B–B cross section

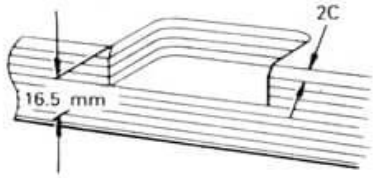

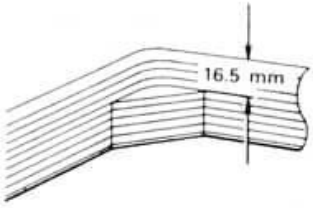

★当使用车板时，钻孔如上图所示。

★ When using a commercial table,drill holes in the table as shown above.

动力	马达
单相	2 极，400W 马达
三相	2 极，400W 马达

★当使用马达时，选一适合左列规格者。

★ When using a commercial motor,select one which specification at left.

Power	Motor
Single-phase	2-pole,400 W motor
Three-phase	2-pole,400 W motor

★参考下表选择正确的马达皮带轮及 V 带以适合你们地区的电力频率

★ Select the correct motor pulley and V-belt by referring to the table below to suit the power frequency of your area.

缝纫速度	频率	马达皮带轮	V-皮带
Sewing speed	Frequency	Motor pulley	V-belt
4500 spm	50 Hz	Motor pulley 115	45 inches
	60 Hz	Motor pulley 95	44 inches
4000 spm	50 Hz	Motor pulley 100	45 inches
	60 Hz	Motor pulley 85	44 inches
3500 spm	50 Hz	Motor pulley 90	44 inches
	60 Hz	Motor pulley 70	43 inches
3000 spm	50 Hz	Motor pulley 75	43 inches
	60 Hz	Motor pulley 65	43 inches

2 油盘与膝控装置安装方法

2 To Attach the Oil Pan and Knee Lifer

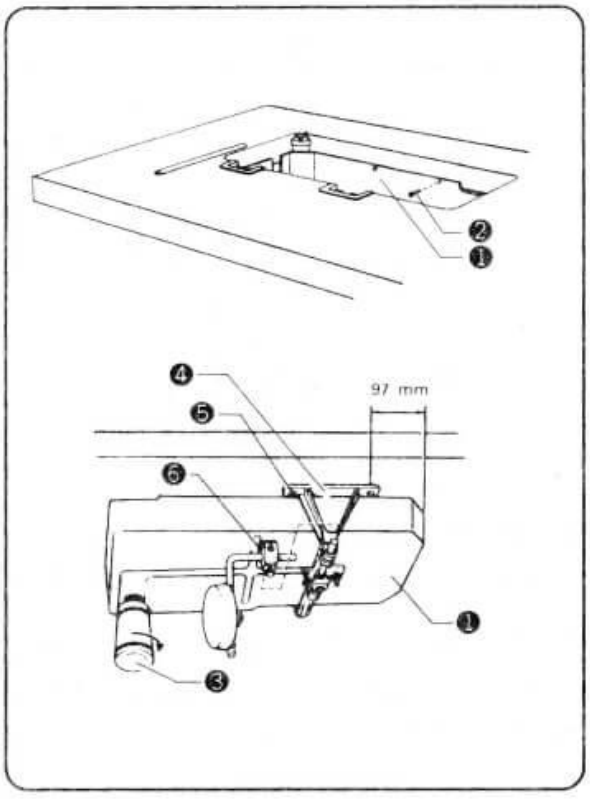

1.Fit oil pan ① into the opening in the table,and secure it with 5 nails ②.
Screw the plastic oiler ③ into the oil pan ①.
2.Install the knee lifter assembly ④ to the underside of the table with the flat-head screws ⑤.
3.Connect the knee lifter ⑥ to the knee lifter assembly ④.

1.装油盘①在车板的空旷处，以五个钉子②固定锁上塑胶油器③在油盘①下方。
2.装设膝控装置④在车板下，用平头螺丝⑤锁住。
3.将膝控装置⑥与膝控装置④组合连接。

橡皮底座与防震橡皮安装方法

3 To Attach the Rubber Bases and Cushions

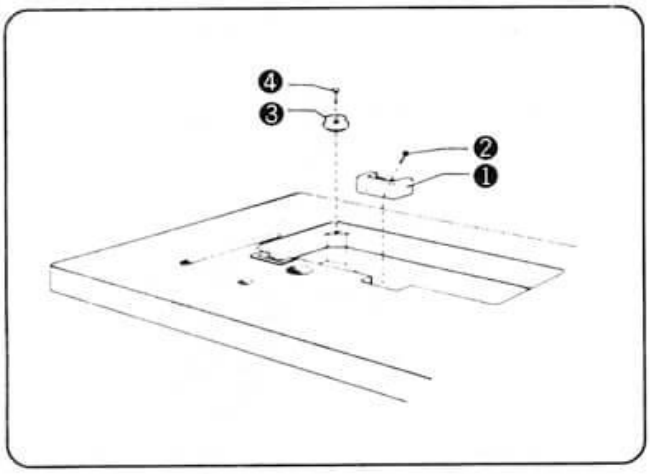

1.Install the rubber bases ① to the table with nails ②.
2.Install the cushions ③ at the four aorners of the table with nails ④.

1.以钉子将橡皮底座①将在车板上②。
2.以钉子④在车板四角装上防震橡皮③。

压脚提升连杆装上护板及膝控装置安装方法

4 Installing the Skirt,Knee Lifter Complying Bar

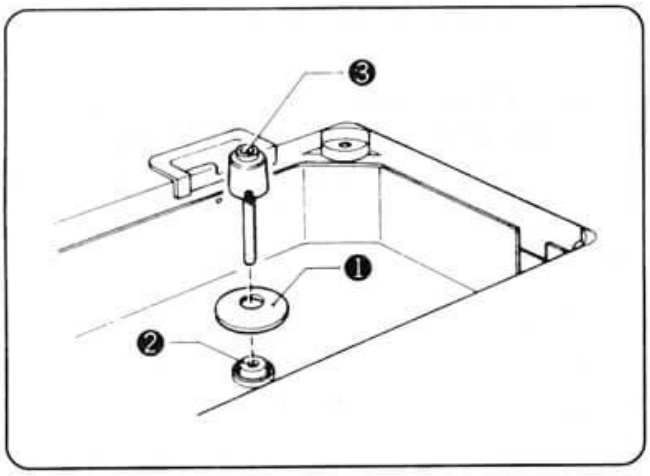

1.Slide the skitt ① onto knee lifter assembly ②.
2.Insert the knee lifter complying bar ③.

1.将护板①套在压脚提升连杆上②。
2.顺着杆将膝控装置③插入。

5 机头安装及皮带调节方法
To Install the Machine Head · Belt Tension

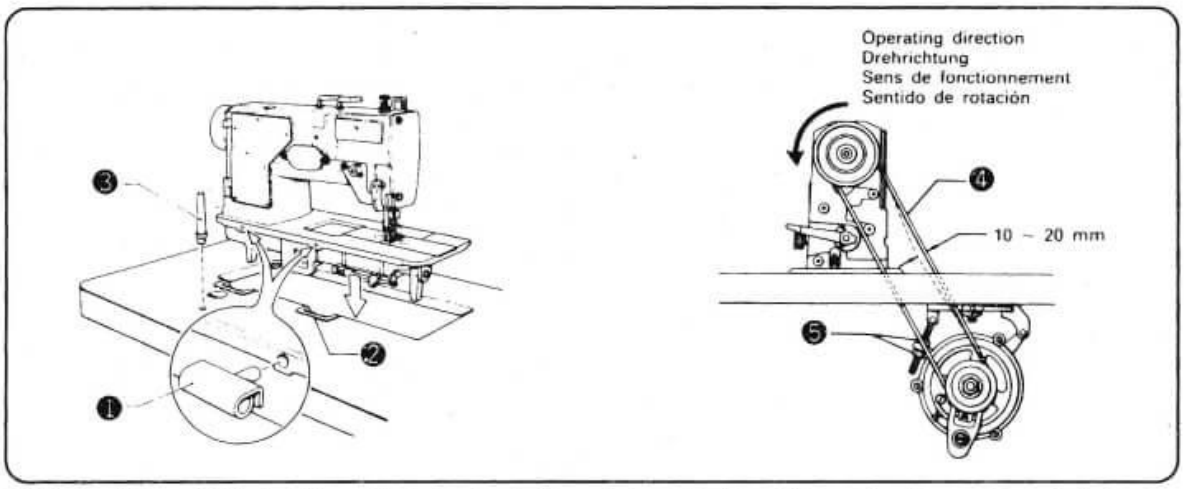

Put the head hinges ① into the holes of the bed and adjust them to the rubber hinge ②,then place the machine onto the head cushions at the four corners.

◎ Use a hammer to drive the head rest ③ into the table.

The correct operating direction of the machine is counterclockwise (as viewed from the pulley side).

Press the belt ④,and adjust the belt tension by turning the nuts ⑤ so that the belt has about 10~20 mm of play.

将螺椿①装入椿孔中，同时运转方向使螺椿适应橡皮底座②，然后将机器放在四角的防震橡皮上。

◎使用锤子将车支柱③余留部份敲入车板中

* 机器之正确运转方向是反时钟方向（如图示）
* 压压皮带④然后转运螺帽调整皮带之松紧度螺帽⑤，如此皮带之转运振动大约为 10-20mm。

6 绕线器安装法
To Attach the Bobbin Winder

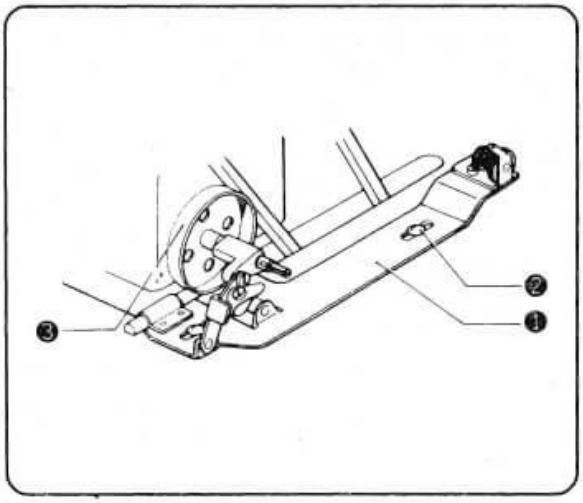

* 用 2 根圆木螺丝②将绕线器①连接在车板上，
（如此绕线皮带轮不会滑落）

* Attach the bobbin winder ① to the table with two round-head wood screws②.
(Attach it so that the bobbin winder pulley ③ will not slip.)

7 绕线器安装法
To Attach the Bobbin Winder

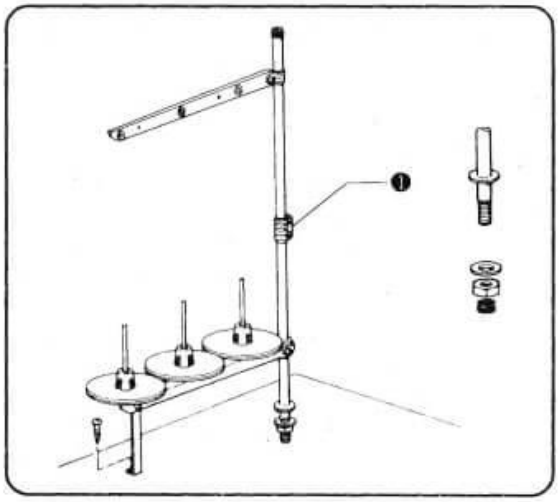

* 装设线架①于工作台右前角处

* Install the spool stand ① at the front right corner of the work table.

8 装设皮带护盖前注意事项
Precautions Before Installing the Belt cover:

先掀起机头，使机头呈水平状况。

1.Bring the sewing machine down towardn the horizontal position

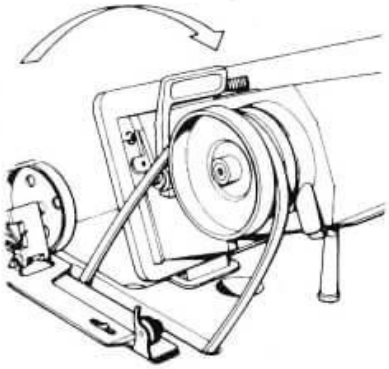

装上皮带U型盖

3. Install belt cover U.

用橡胶领装上螺丝及衬垫，装妥在皮带U型盖。

2.Secure belt cover U with the rubber collat,set screw,and washer.

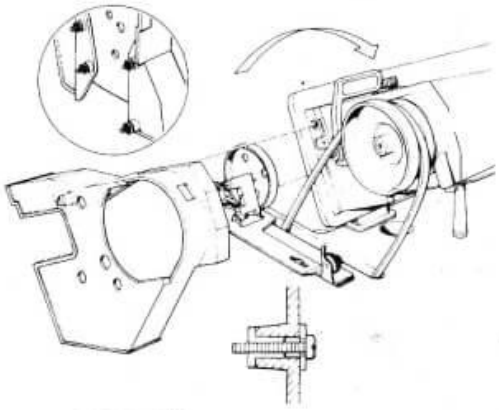

装上皮带D型盖

4. Install belt cover D.

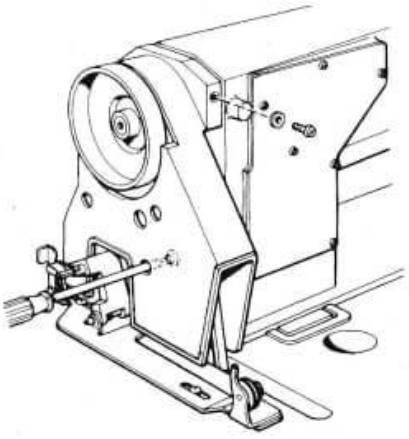

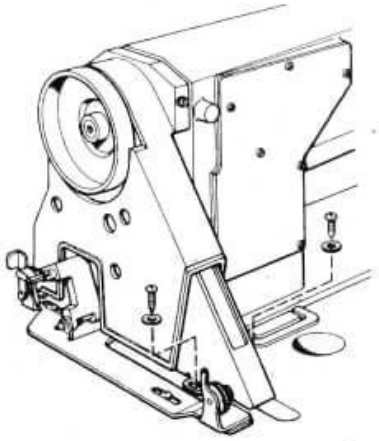

润滑

LUBRICATION

1 润滑 Lubrication

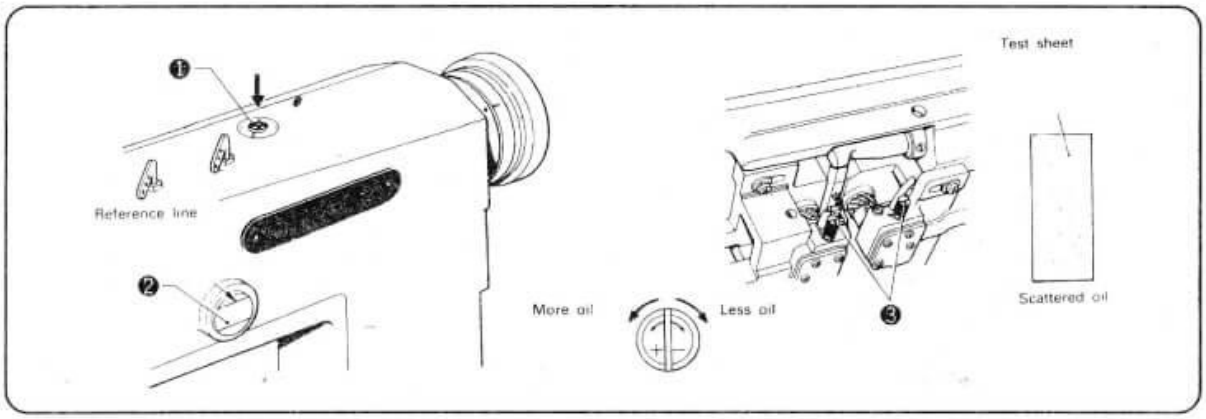

1.Filling the oil tank on top of the arm.

★ Add oil from oil cap ① until it reaches the top reference line in the gage glass ②.

★ Add more oil when the oil lever drops to the bottom reference line.

2.Adjustment of oil flow to the rotary hook

★ When replacing the rotary hook,be sure to turn adjustment screw ③ to adjust the oil supply to the rotary hook.
(The amount of oil scattering from the rotary hook should be as shown on the test sheet above for approximately every 10 seconds.)

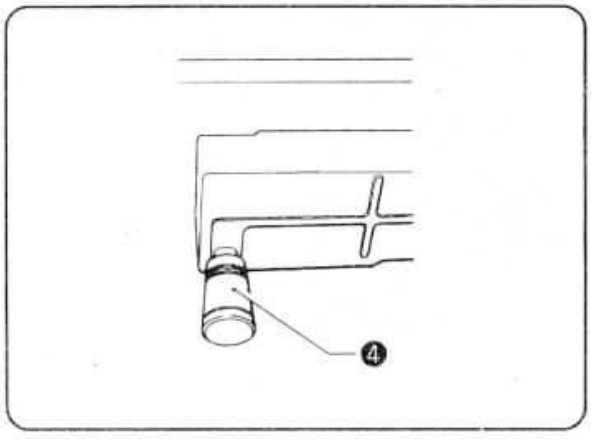

* 除去任何集在塑胶油器中的油器④。
* Remove any oil which has collected in the plastic oiler ④.

1.加油至臂顶油槽中。

* 从油盖处加油①直到油满到油窗上参考线②。
* 当油低于下线时，加多一点油。

2.梭头供油量的调整。

* 当更换梭头时，切记调整油量。

2 上油
Oiling

使用机器前切记滴一二滴油在箭头所指之处。

Before using the machine,be sure to wupply a drop or two of oil at each of the poins indicated by an arrow.

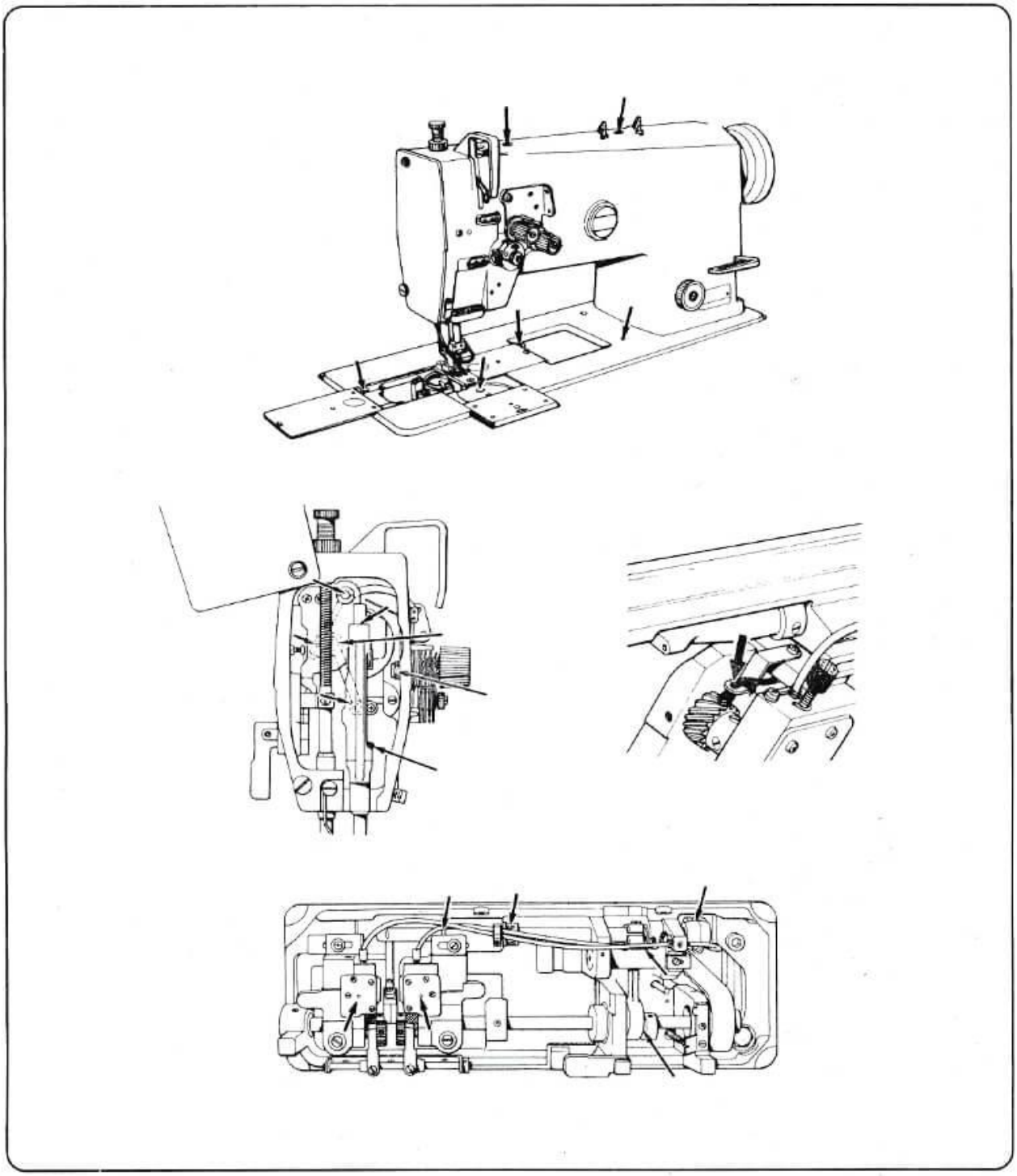

正确之操作

CORRECT OPERATION

1 接上针 To Attach the Needle

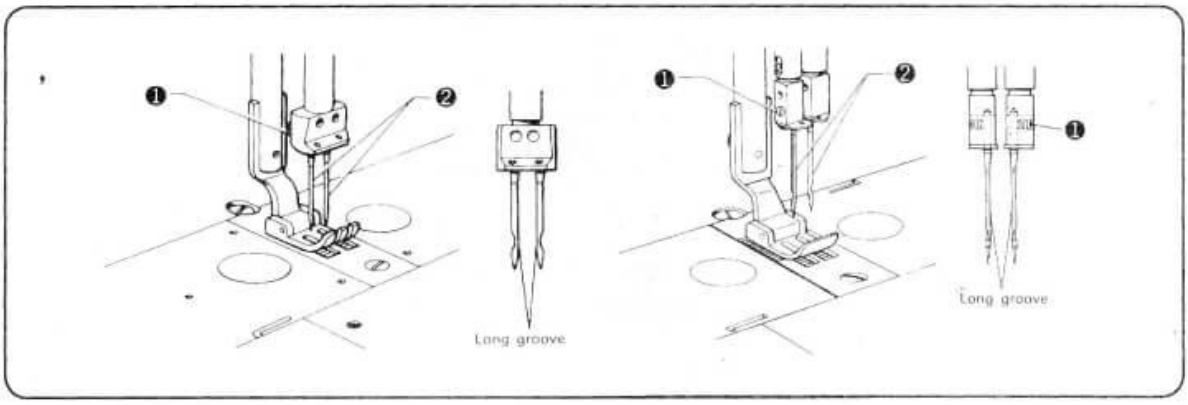

★ Loosen the screws ①,hold the needles ② with their long groove facing inward,insert them all the way into the needle bars,and re-tighten the screws ①.

★松开螺丝①，将针②的长沟向内，直接将针插入针夹中，再上紧螺丝①。

2 梭心更换方法 To Remove the Bobbin

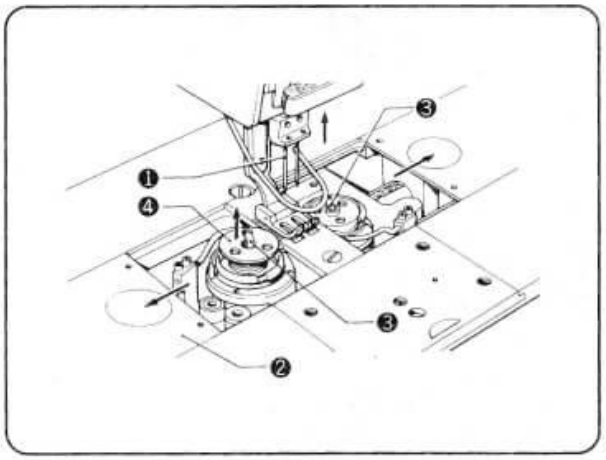

* 当欲更换梭心，或拿起梭壳时，切记关掉电源。

※ Be sure to turn the power off when replacing the bobbin and bobbin case.

1.Raise the needles ① to the highest postitions,and open the slide plates ② by moving them to the right and left.

2.Pull the rotary hook latches ③ upward,and then remove the bobbin ④.

1.提升针①至最高点，以左右移动方式，打开滑板②。

2.向上拉直回转梭闩③然后移去梭心④。

梭壳移动方法

To Remove the Bobbin Cases

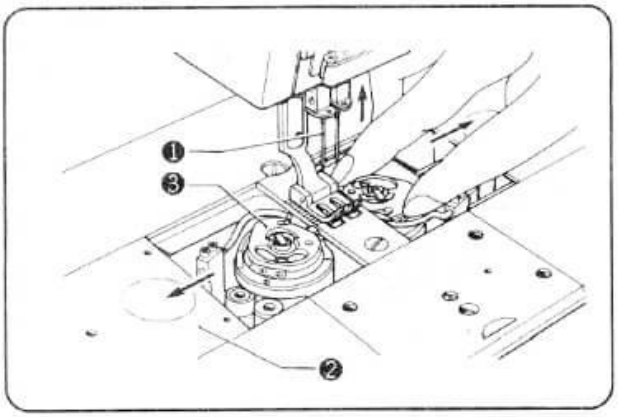

1.提高针①至最高位置，以左右移动方式，打开滑板②。
2.掀起回转梭闩，拿出梭壳③。
1.Raise the needles ① to the highest positions,and open the silde plates ② by moving them to the right and left.
2.Remove the bobbin cases by ③ grasping the latches.

3 绕底线的方法

To Wind the Lower Thread

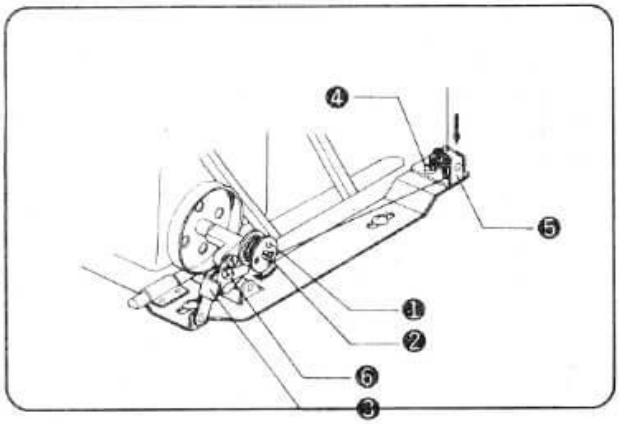

1.将梭心①推上绕线轴②。
2.将绕线器停止闩③一直往下推。
3.线在梭心①绕两三圈，（依据所指方向）然后操作机器。
4.如果线绕起来不平均时，松动导线螺丝④然后左右移动导线器⑤。
※当梭心①绕线过多或过少时，请调整螺丝⑥。
1.Push the bobbin ① onto the bobbin winder shaft ②.
2.Push the bobbin winder stop latch ③ all the way downward.
3.Wind the thread around the bobbin ① a few times(in the direction of the arrow),and then operate the machine.
4.If the thread cannot be wound evenly, loosen the thread guide screw ④,and move the thread guide ⑤ to the right or left as necessary.
※ To wind more thread onto the bobbin ①,make adjustment by tightening the screw ⑥.

4 梭心放置方法
To Attach the Bobbin

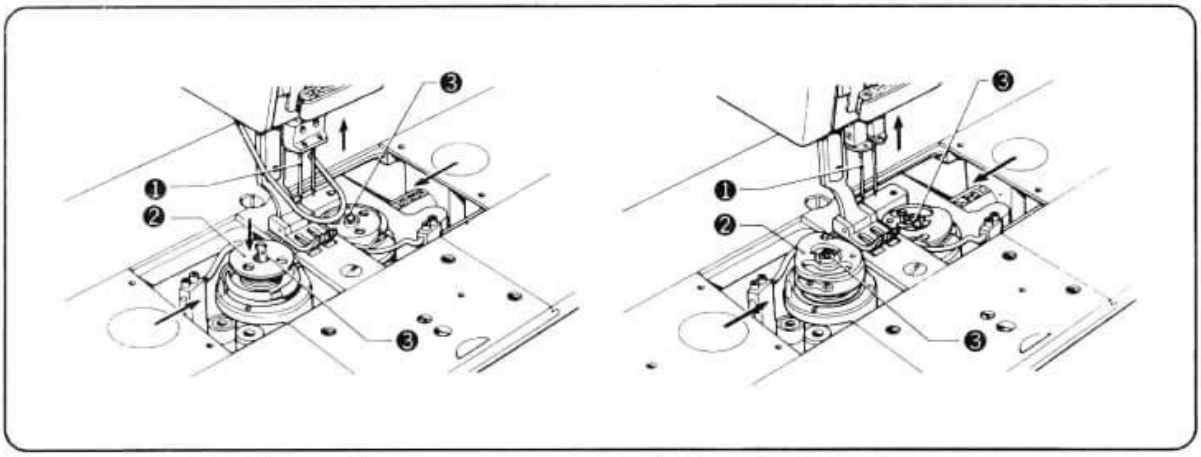

1.Raise the needles ① to highest positions.
2.Place bobbin ② into the rotary hook as shown above.
3.Push latch ③ of the rotary hook flat.
4.Close the bed slide.

1.将针①调至最高位置。
2.如上图所示，将梭心②装入梭头中。
3.将回转梭闩③装入。
4.将滑板关上。

1.Raise the needles ① to highest positions.
2.Place bobbin case ② into the rotary hook as shown above.
3.Push latch ③ of the rotary hook flat.
4.Close the bed slide.

1.将针①调至最高位置。
2.如上图所示，将梭心②装入梭头中。
3.将回转梭闩③装入。
4.将滑板关上。

5 穿底线
Lower Threading

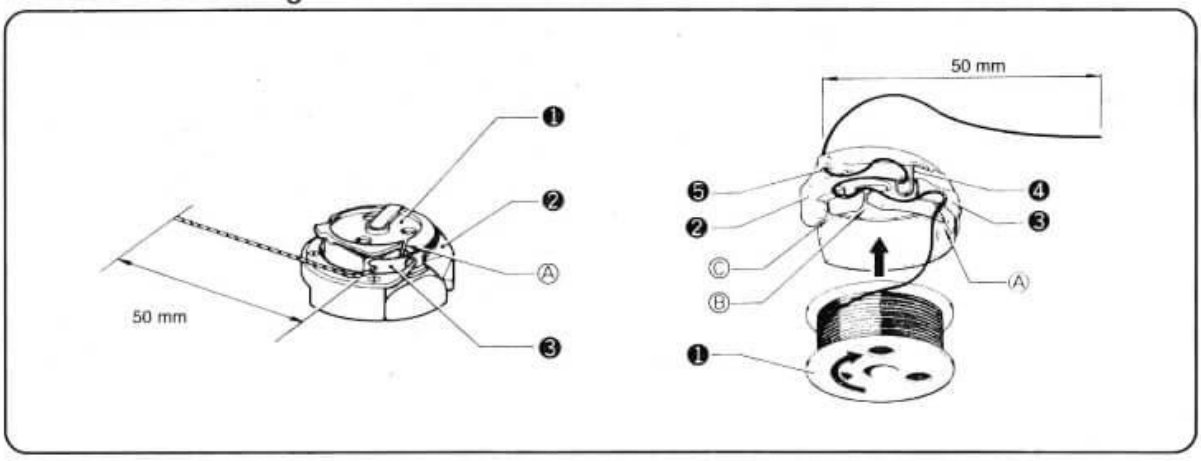

1.Insert the bobbin ② into the rotary hook ①.
2.Pass the thread through slot A and under the tension spring ③.
3.Pass the thread through the needle plate and pull out about 50 mm.

1.将梭心①插入梭头②中。
2.将线穿过 A 孔而且在弹簧③下。
3.将线穿过针板并拉出大约 50mm。

1.Insert the bobbin ① into the bobbin case ②.
2.Pass the thread through slot A and under the tension spring ③.
3.Pass the thread through slots B and C,and then through the thread-loosening -prevention spring ④.
4.Pass the thread through the thread hole ⑤ and pull out about 50 mm.

1.将梭心①插入梭壳②中。
2.将线穿过 A 孔而且在弹簧③下。
3.将线穿过 B 孔 C 及处，然后穿过防松弹簧④。
4.将线穿过线孔并拉出约50mm。

6 穿上线
Upper Threading

842

Raise the thread take-up to the highest position.

将天平升至最高位置

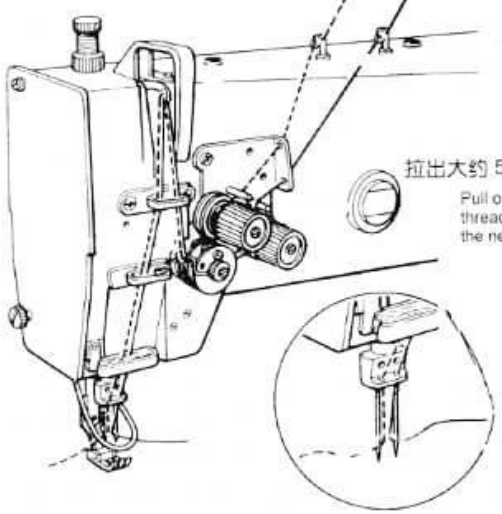

Pass the thread through the needle eyes from inside to outside.

将线穿过针眼由内至外

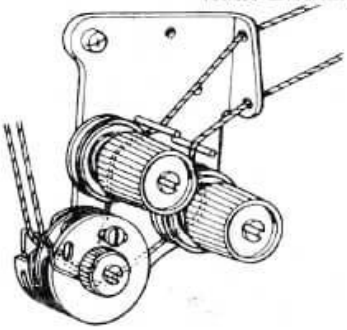

棉线
Cotton thread

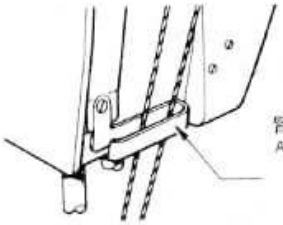

845

Raise the thread take-up to the highest position.

将挑线杆升至最高位置

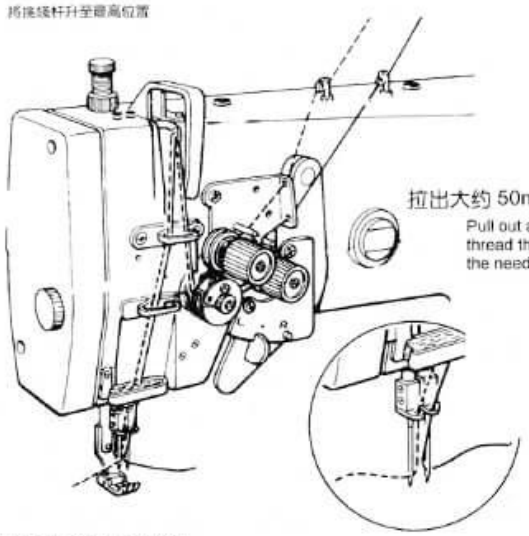

将线由内而外穿过针眼

ass the threads through the needle eyes from inside to utsid

合成线
Synthetic thread

毛毡
Felt

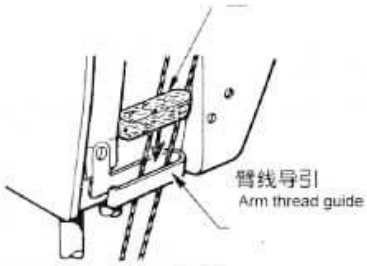

如用合成线在臂线导引处便用毛毡

If synthetic thread is used,use the felt (included) in the arm thread guide

7 压脚压力的调整
Adjustment of the Presser Foot Pressure

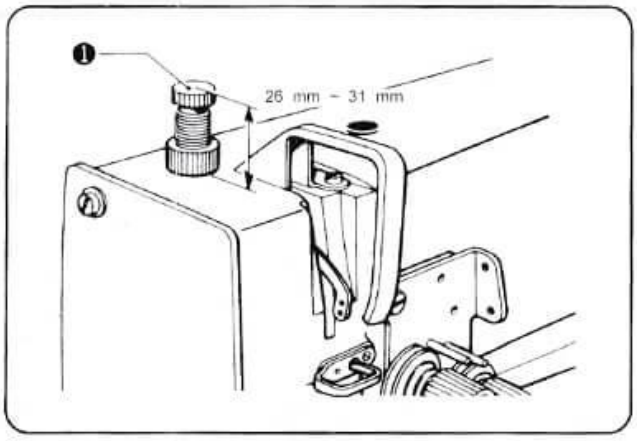

Use 用途	Presser foot pressure 压脚压力	Adjustment screw height 调整螺丝
For the material 薄料	3 kg	31 mm
For medium thick materials 中厚料	4 kg	28 mm
For thick material 厚料	5 kg	26 mm

★ djust the presser foot pressure by turning the presser foot adjustment screw ①. ＊以转压脚来调整压脚压力。

8 针目粗细的调整　842
Adjustment of the Stitch Length　842

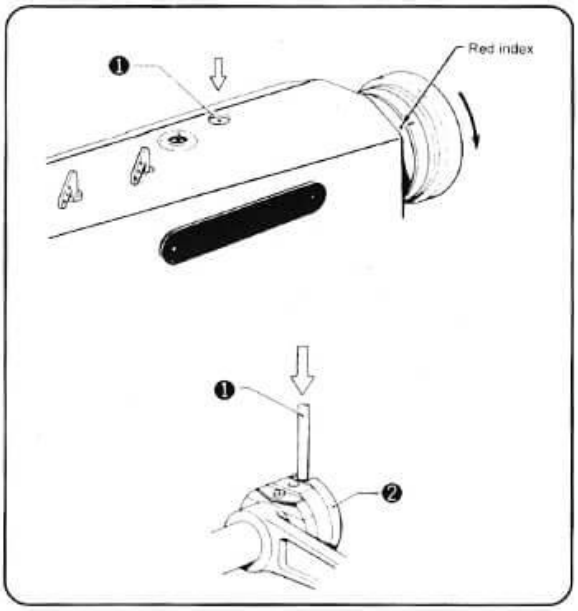

＊停止缝纫机，固定调整器按扭①然后向前转动皮带轮以使调整器进入偏心轮②中之沟，继续转动皮带使红指标与刻度所期望的指标成一直线。松去调整按扭。

※机器运转中勿压调整按扭，同时确定按扭①在起动机器前是向上的。

★ Stop the sewing machine.Hold the feed regulator button ① depressed and turn the pulley slowly forward so that the feed regulator button ① enters the groove in the eccentric wheel ②.Continue turning the pulley and align the red index with the desired setting on the scale.
Release the feed regulator button ①.

※ Do not press the feed regulator button ① during sewing machine operation.Also,make sure the button is up before starting the sewing machine.

缝合长度之调整　845
Adjustment of the Stitch Length　845

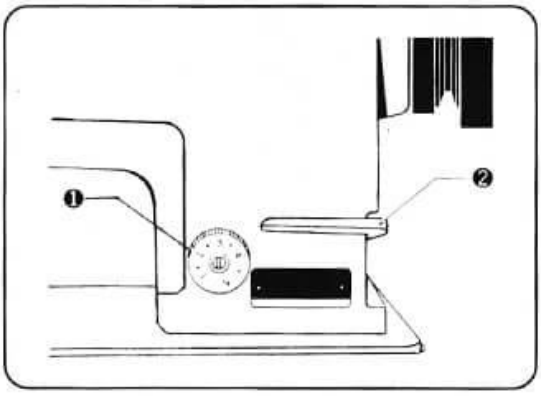

★ Stop the machine and turn the feed adjustment dial ① to the desired stitch length.The larger the number,the longer the stitch.

★ The material will be fed backward when the reverse lever ② is pressed down,and forward again when it is released.The lever will automatically return to its original position when released.

1.停止机器然后转动针数调整盘①调至所需的缝合长度号码愈大，缝合愈长。

2.压下倒缝送料扳手，缝料将反向，当倒缝送料板手恢复至原位置时，又开始正常缝纫。

9 线的松紧度 Thread Tension

1.Thread Tension 线的松紧度



优良平衡缝合
Good even stitches



上线松紧度太强或下线松紧度太弱
Upper thread tension too strong or lower thread tension too weak



上线松紧度太弱或下线松紧度太强
Upper thread tension too weak or lower thread tension too strong

Tension of lower thread 下线的松紧度

用途 Use / 线 Thread		中厚料 For medium thick	厚料 For thick
棉 Cotton	松紧度 Tension	50~70g 50â70g	60~80g 60â80g
	度号n° Count	#50	#50
达克龙合成料 Dacron	松紧度 Tension	35~45g 35â45g	60~70g 60â70g
	度号n° Count	#50	#30

＊下线之松紧因线与布的类别不同而异
而且可以转动下线松紧调节螺丝①来调整。
＊以转动线松紧螺帽②来调整上线的松紧。

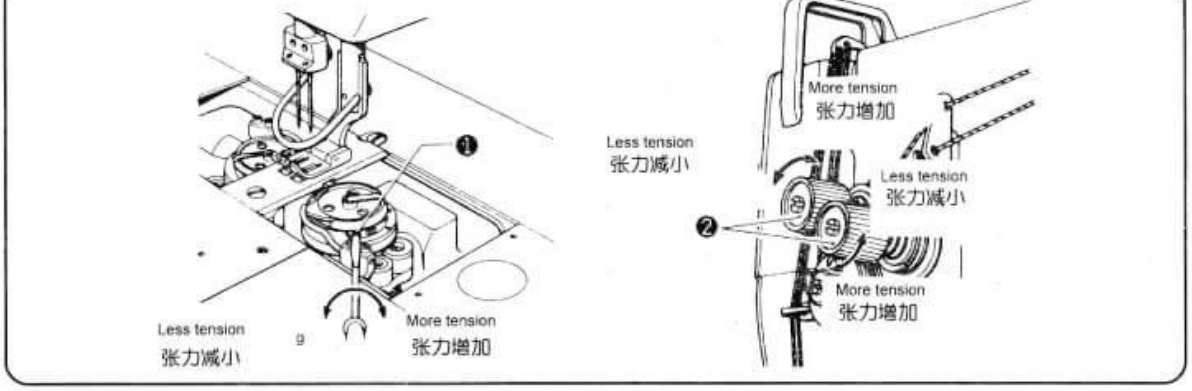

★ The tension of the lower thread varies with the kind of cloth and thread,and can be adjusted by turning the lower thread tension adjustment screw ①.

★ Adjust the tension to the upper thread by turning the thread tension nut ②.

※ After the tension of the lower thread has once been adjusted,it is hereafter necessary to adjust only the tension of the upper, thread to obtain a good even stitch.

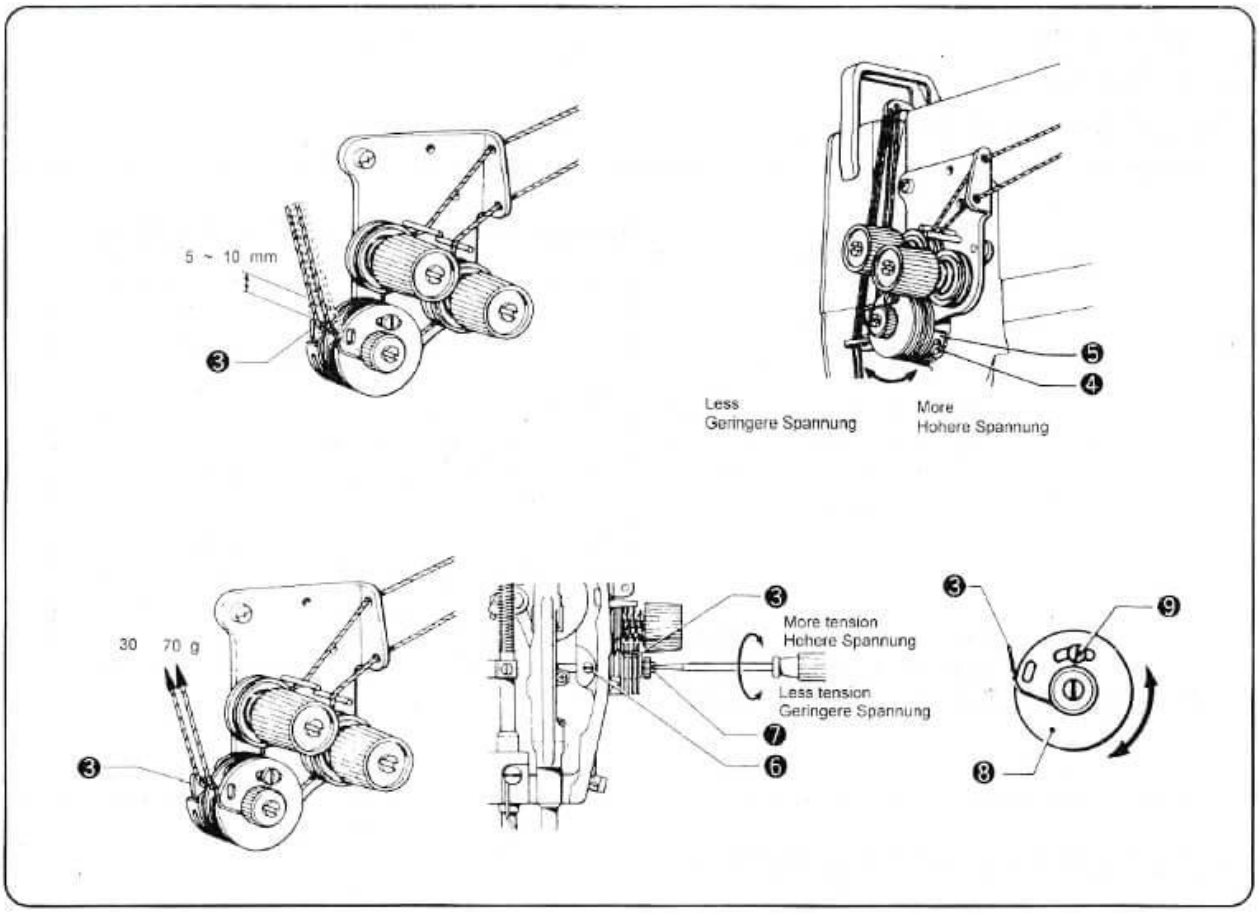

2.Thread take-up spring

Operating range of thread take-up spring

★ The standard operating range of the thread take-up spring is 5~10 mm.

The operating range of the thread take-up spring ③ can be adjusted by the thread take-up stopper ⑤ after loosening the screw ④.

Tension of the thread take-up spring

★ The standard tension of the thread take-up spring is 30~70 grams.

Adjust the tension of the thread take-up spring ③ by loosening the screw ⑥ and turning the thread tension stud ⑦.

Thread take-up spring timing

★ The take-up spring guide ⑧ shoule be at the center for standard thread take-up spring ③ timing adjustment.To adjust the timing of the thread take-up spring ③,loosen set screw ⑨ and turn the take-up spring guide ⑧.

2.线的调节弹簧

调节弹簧的操作范围

* 标准的操作范围是 5~10mm。

调节弹簧③的操作范围可用线调节停止器⑤于松线螺丝后④来调整。

线调节弹簧的松紧度

* 标准的线调节弹簧松紧度是 30~70grams。

松掉螺丝⑥转动线松紧螺帽⑦来调整线调节弹簧③的松紧度。

线调节弹簧时间的测定

* 调节弹簧轴⑧应在中心位置，作为标准的线调节弹簧③，松紧的调整。松掉螺丝⑨，转动调节弹簧轴⑧来调整弹簧的松紧度。

停止针杆（右和左） 845

10 To Stop the Needle Bars(right and left) 845

停止针杆的运作

1.To Stop operation of the needle bar

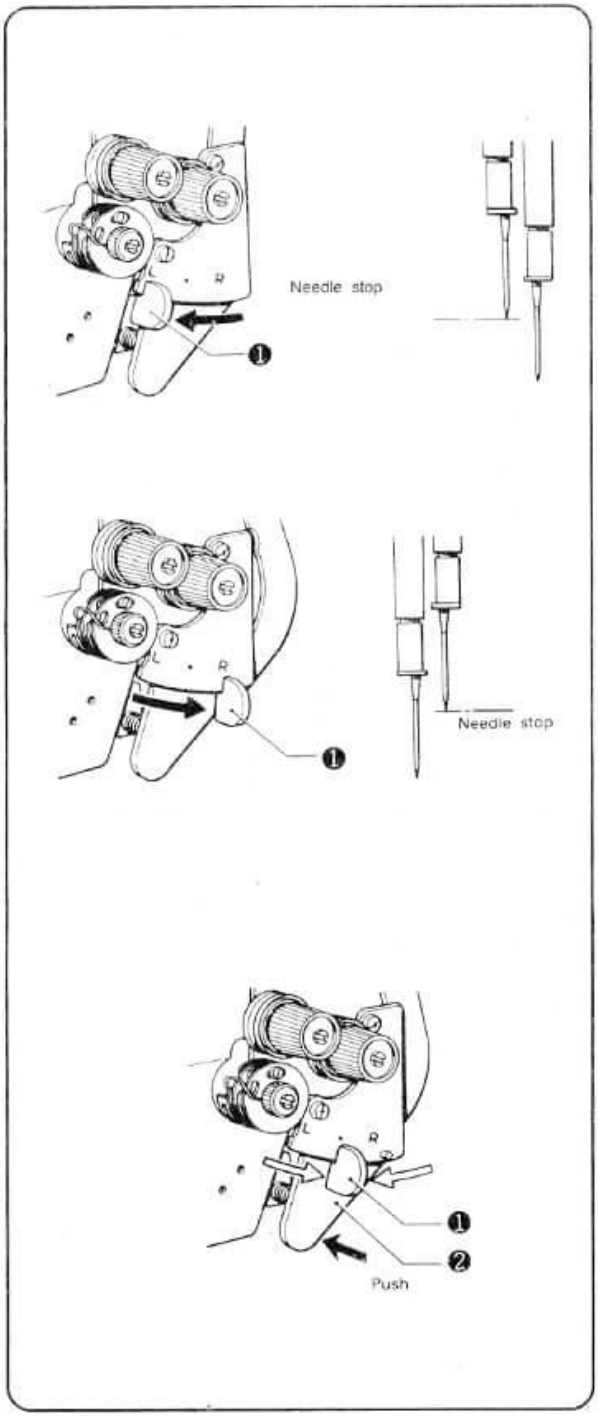

(1)To stop operation of the left needle bar:
Move the stop lever ① to the "L" position.
(2)To stop operation of the right needle bar:
Move the stop lever ① to the "R" position.
(3)To resume twin-needle sewing:
Press the push lever ②.The stop lever ① will then return to its original position automatically.
※ The stop lever can be moved while the machine is operation, but it is better to do so by first stopping the machine temporarily with the thread take-up lever at its highest position.

(1)移动停止平衡杆①至"L"位置，以停止左针棒的运作。
(2)移动停止平衡杆①至"R"位置，以停止右针棒的运作。
(3)恢复双针缝纫
恢复平衡杆②停止平衡杆①会自动回到原来位置。
※在机器运转时，停止平衡杆可以移动，但这样做最好是线调节平衡杆在最高位置时先暂时停止机器。

缝合号码
2.Number of stitches:quick-reference guide

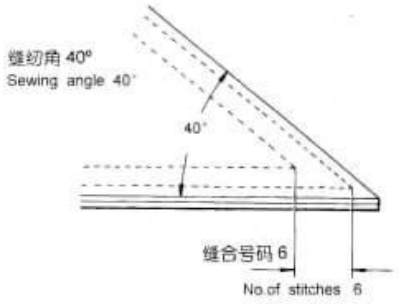

缝纫角 Sewing angle / 缝合号码 No.of Stitches	30°	40°	50°	60°	70°	80°	90°	100°	110°	120°	130°	140°
2					4.6	3.8	3.2	2.7	2.2	1.8	1.5	1.1
3			4.6	3.5	3.0	2.5	2.1	1.8	1.5	1.2		
4		4.4	3.4	2.8	2.3	1.9	1.6	1.3				
5	4.8	3.5	2.7	2.2	1.8	1.5	1.3					
6	4.0	2.9	2.3	1.9	1.5	1.3						
7	3.7	2.5	2.0	1.6								
8	3.0	2.2	1.7									

◆For 1/4" needle width:

◎ Determine the sewing pitch from the chart above to make beautiful corner stitching.

The number of stitches of the outer needle varies according to the combination of sewing angle and sewing pitch.

[Example]

For a sewing angle of 40° and a sewing pitch of 2.9mm,the number of stitches becomes 6.

适 1/4" 针宽

从上图表决定缝纫颠簸间距以造成美丽角缝。

外针缝合号码的变化乃依据缝纫角度及缝纫颠簸间距来决定。

〔例如〕

适合 40° 的缝纫角度及 2.9mm 缝纫颠距其缝合号码变成 6 号。

标准调整方法

STANDARD ADJUSTMENT

1 针及送布时间的调整
Adjustment of the Needle and Feed-Timing

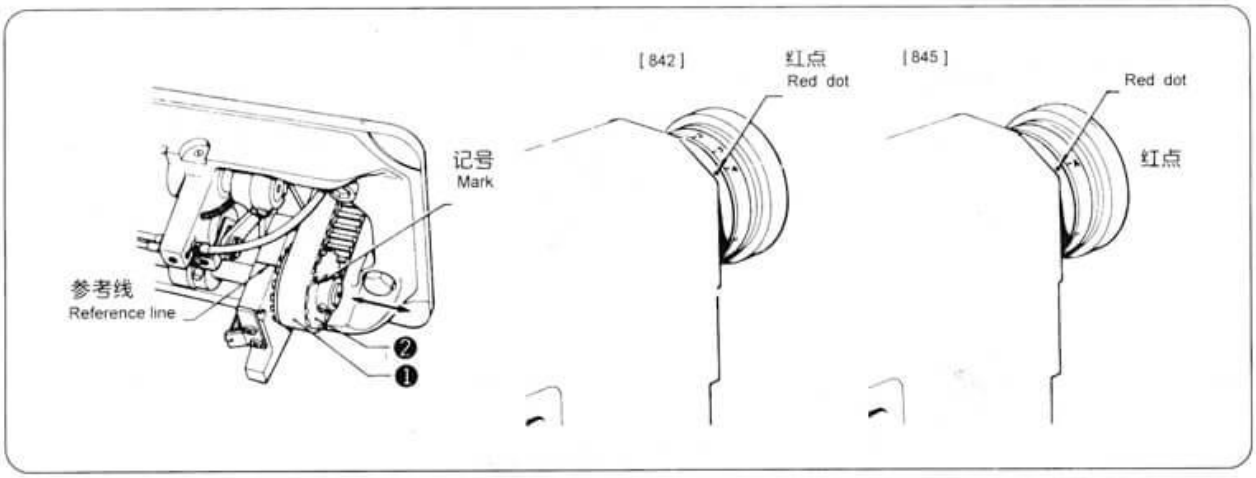

1.Remove the needles.
2.Tilt the machine head back and remove the timing belt ①.
3.Turn the machine pulley until the "A" mark is aligned with the red dot.
4.While holding the upper shaft so that it won't move,align the arrow on the lower belt pulley ② with the reference line on the arm bed,and attach the timing belt ①.
5.Return the machine head to its original position,and install the needles.
1.将针取下。
2.使机器头向后头倾斜，然后移开时配皮带①。
3.转动机器皮带轮直到"A"记号与红点成一直线止。
4.固定上轴使其不动，使下皮带轮的箭头与臂床上的参考线成一直线，然后接上时配皮带①。
5.恢复机头至原来位置，然后装上针。

2 针及回转梭头时配的调整
Adjustment of the Needle and Rotary Hook Timing

1. Needle and rotary hook point gap
针与回转梭头尖距离

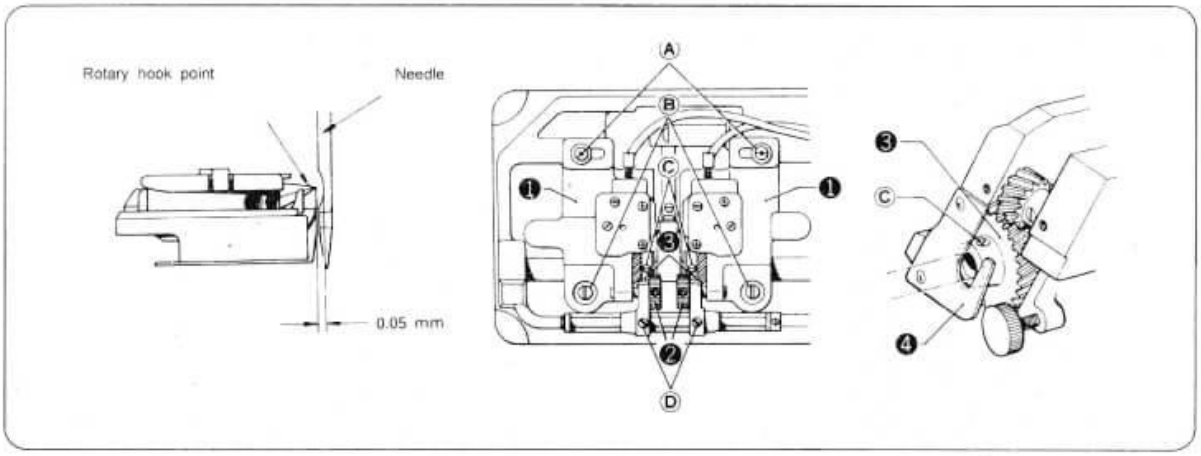

(1)Loosen screwsA,B,C,D,and shift the rotary hook base ① right or left until the clearance between the needles and rotary hook points is 1~3 mm.

(2)Tighten screw D,and then turn adjustment screw ② until the needle to rotary hook point gao is 0.05 mm.

(3)Firmly tighten screwsA,B,and C when the adjustment is completed.

Note

※ Tighten screw C so that the rotating hook shaft gear ③ lightly touches plate ④.
Also,be sure not to change the position of the screw stop for set screw C of gear ③.

(1)松掉螺丝 A,B,C,D 移去左或右回转梭头基座①。
直至针与回转梭头尖的距离是 1~3 mm。

(2)上紧螺丝 D，然后转调整螺丝②直到针到回转梭头尖的距离为 0.05 mm。

(3)在完成调整后，锁紧螺丝 A,B 及 C。

注意：

上紧螺丝 C，如此回转的梭头轴的齿轮③轻轻接触在板上④。

但要确定装齿轮③螺丝 C 时，不要改变齿轮位置。

回转梭头与针板间的间隙

2. Clearances between rotary hooks and needle plate

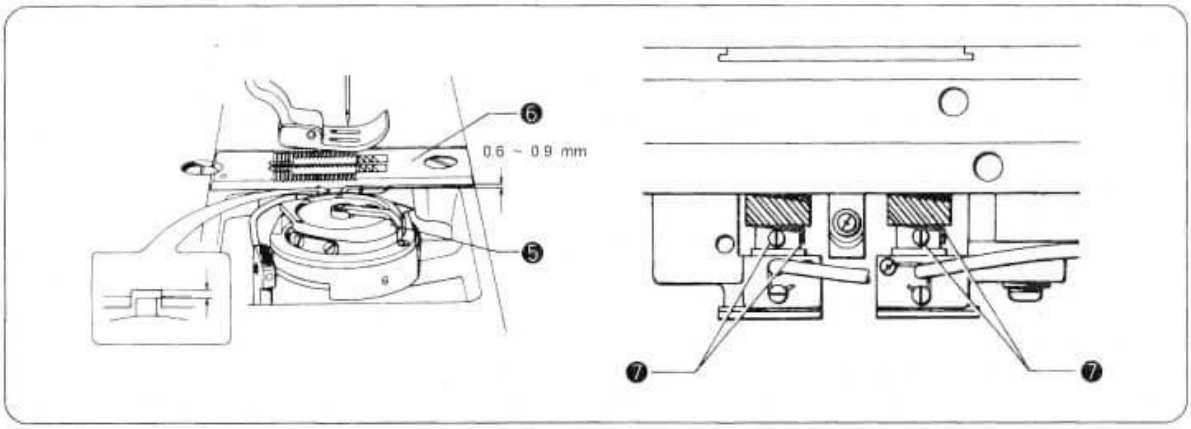

★ Loosen the screws ⑦,and raise or lower the rotary hooks ⑤ until the clearance between the rotary hooks ⑤ and the needle plate ⑥ are 0.6~0.9 mm.

★松去螺丝⑦提高或降低回转梭头⑤直到针板⑥与回转梭头⑤间的间隙为 0.6~0.9 mm。

针杆提升距离与高度

3.Needle Bar Lift Stroke and Height

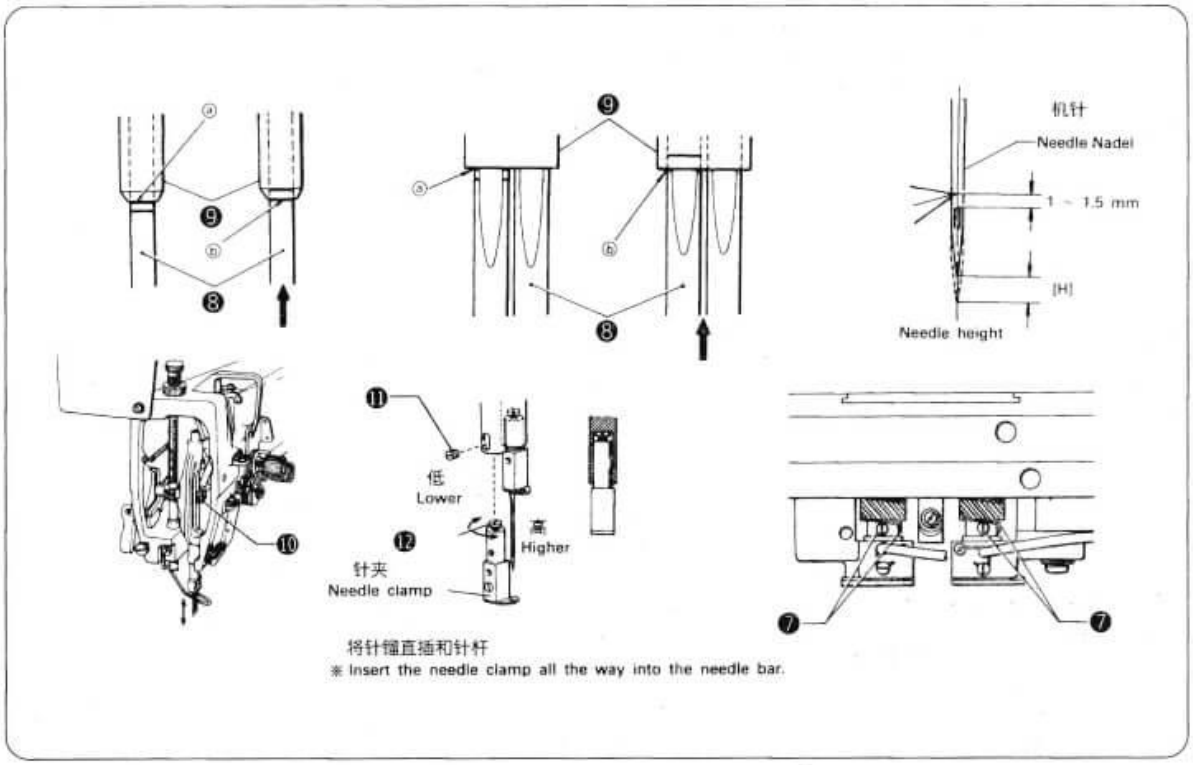

	842		845		845			845			845
	-3	-5	-3	-5	-3	-5	-7	-3	-5	-7	-1
Stitch length 缝合长度	2 mm	3 mm	2 mm	3 mm				3 mm			2 mm
Needle height针高[H]	2.4 mm							2.4 mm			2.0 mm

Needle bar height(842)

(1)Set the feed adjustment dial to the "0" position.

(2)When the needle bar ⑧ is in its lowest position,the needle position reference line ⓐ of the needle bar must be aligned with the bottom edge of the needle bar support ⑨.Loosen the set screw ⑩,and align the needle position reference line ⓐ of the needle bar with the bottom edge of the needle bar supper ⑨.

Needle bar lift stroke

(1)Turn the feed-adjustment dial to 2 or 3.

(2)When the needle bar ⑧ is in H mm (2.4mm or 2.0mm) above its lowest position,needle position reference line"b"of the needle bar is aligned with the bottom edge of the needle bar.At this time,the rotary hook point must be aligned with the needle center. Loosen the three set screws ⑦,and align the rotary hook point with the needle center.

(3)When the rotary hook point is aligned with the needle center, confirm that the space between the top of the needle eye and rotary hook point is 1~1.5 mm.

(Model 845)

Remove the set screw ⑪ turn the needle clamp screw ⑫ ,and adjust so that the space between the rotary hook point and the top of the needle eye is 1~1.5 mm.

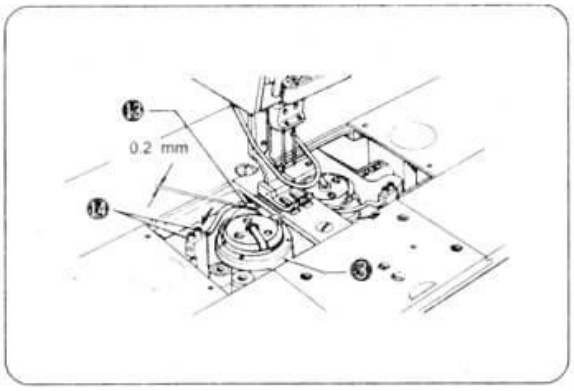

4.Clearances between rotary hooks and bobbin case openers

★ Adjust the clearances between the rotary hooks ③ and the bobbin case openers ⑬ to about 0.2 mm (when the bobbin case openers ⑬ have fully retracted in the direction of the arrow) by loosening screw ⑭ and moving the bobbin case opener ⑬ to the right or left.

回转梭头尖与梭头突起部位的间隙

★调整回转梭头③与内梭头突起部位 ⑬ 的距离到0.2mm(当内梭头突起部位已完全依箭头方向缩回时)，调整方式是先松掉螺丝⑭然后再左右移动内梭头突起部位 ⑬

3 压脚高度的调整 Adjustment of the Presser Foot Height

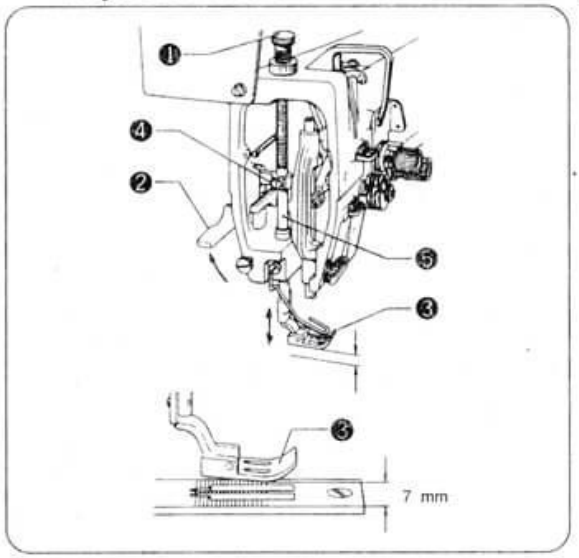

1.Loosen the screw ①.

2.Remove the face plate.

3.Raise the presser foot ③ by using the presser foot lifter ②.

4.Loosen screw ④ and raise or lower the presser guide so that the presser foot ③ will rise to about 7 mm above the needle plate.

※ Be careful not to turn the presser bar.

1.松掉螺丝①。

2.移去面板。

3.用压脚上升器②提起压脚③。

4.松掉螺丝④然后一升或下降压标，如此压脚③会上升大约高于针板7mm。

※小心勿转动压杆⑤。

4 送布齿高度的调整 Adjustment of the Feed Dog Height

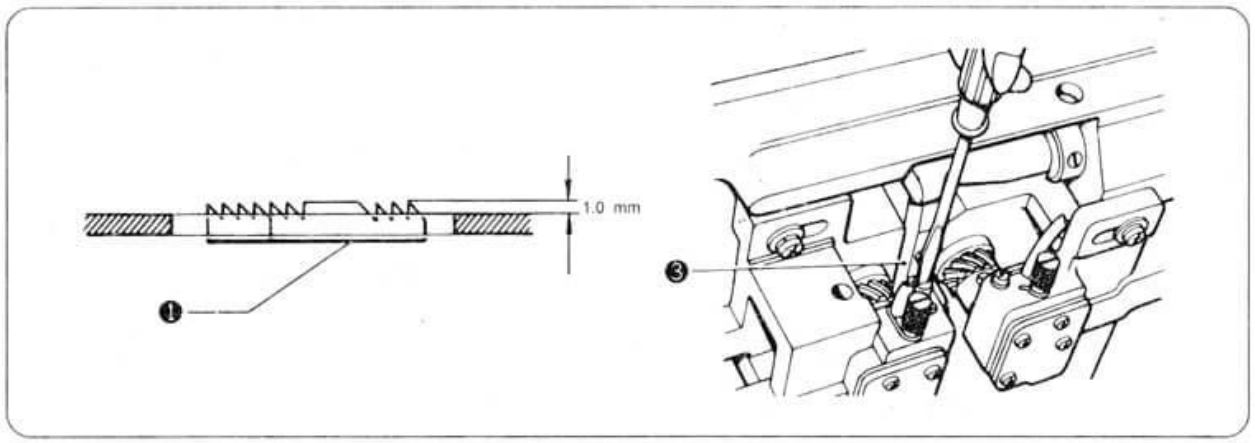

1.Turn the pulley until the feed dog ① rises to the highest position.

2.Loosen screw ② and raise or lower the feed dog holder ③ so that the feed dog ① will rise to about 1.0 mm above the needle plate.

1.转动皮带轮直到送布齿①升至最高点。

2.松掉螺丝②提高或下降送布齿固定器③，如此送布齿会上升高于针板 1.0 mm。

5 如何变更针杆组件
How to Change Gauges

关掉电源
Turn the power switch off.

1 移去滑板
Remove the slide plate.

2 移去针
Remove the needle.

3 移去针夹
Remove the needle clamp.

用压脚提升器提高压脚
Raise the presser foot by using the presser foot lifter.

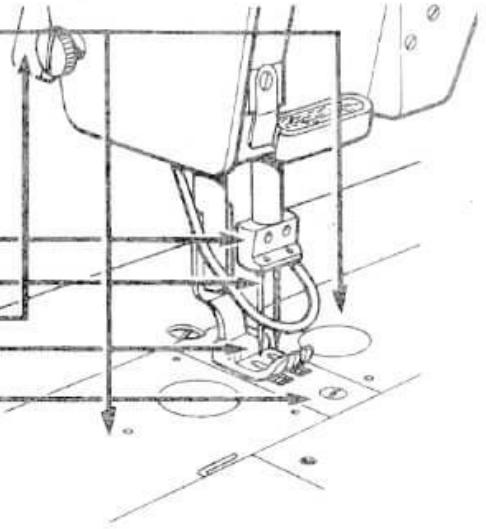

4

5 移去压脚
Remove the presser foot.

6 移去针板
Remove the needle plate.

7 移去送布牙
Remove the feed dog.

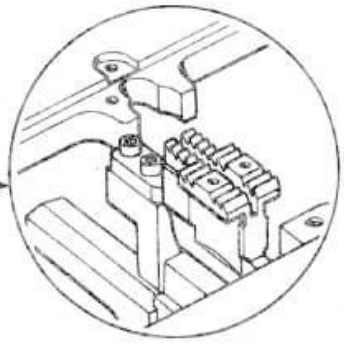

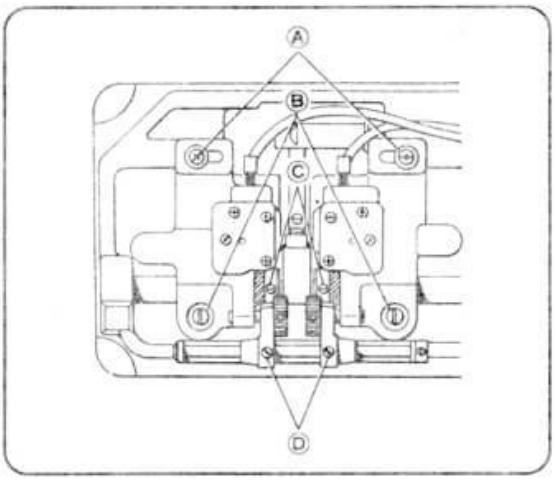

Adjusting the rotary hook base

★ Make the following adjustment when replacing the current gange with one wider.The feed dog cannot be installed if this adjustment is not made.Loosen screw A,B,C, and D, and shift the rotary hook base right or left.

调整回转梭头基座

★当更换不同尺寸时做下列调整，本调整未做前勿装设送布齿，松掉螺丝 ABC 及 D，然后左右移动回转梭头基座。

Order 顺序	What to do 做什么
1 接上针夹 Attach the needle clamp.	★ Loosen screw ① and align the needles so that the needles will fall in the centers of the needle holes in the feed dog. 松掉螺丝，对准针以便使针落入在送布齿中的针孔中心 Long groove 长凹槽 送布牙 Feed dog
2 接上针 Attach the needle.	
3 接上送布齿 Attach the feed dog.	针杆低位置 Needle bar down position 5841 5845 — 2.4 mm 5872 5847 — 2.0 mm 5845 5875 — 2.4 mm 5848 — 2.0 mm
4 针杆提升距离的调整 Adjustment of needle bar lift strke.	
5 恢复机头至原来位置 Return the machine head to its original postition	当针杆在最低位置时，针杆的针位参考线与针杆座的底缘成一直线 当针杆高于其最低点 2 或 2.4mm 时，针杆的针位参考线与针杆座的底缘成一直线，此时，回转梭头尖一定要与针心成一直线。 When the needle bar is in its lowest position,the needle position reference line ⓐ of the needle bar is aligned with the bottom edge of the needle bar bushing. When the needle bar is 2 or 2.4 mm above its lowest position,needle position reference line ⓑ of the needle bar is aligned with the bottom edge of the needle bar bushing.At this time,the rotary hook point must be aligned with the needle center.

6 移动回转梭头基座
Move the rotary base.

Shift the rotary hook base to the approximate position (within 1~3 mm).
※ The rotary hook base will not move unless screws A,B,C and D are loosened. Tighten screw D,and turn the adjustment screw until the needle to rotary hook gap is 0.05mm.After adjustment,firmly tighten screws A,B and C.

移动回转梭头基座至大约的位置（1~3mm 之内）
※除非螺丝 ABC 及 D 松掉，不要移动回转梭头基座。

7 回转梭头与针的距离
Clearance between rotary and needle.

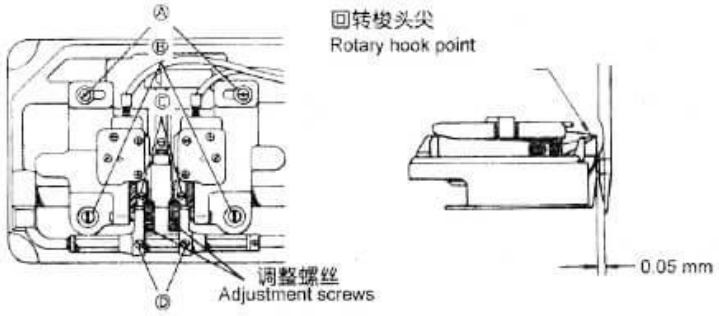

8 回转梭头时配与针的高度
Rotary hook timing and needle height.

9 恢复机头至原来位置
Return the head to its original position.

松掉三组螺丝②然后使回转梭头尖与针中心成一直线
Loosen the three set screws ②,and align the rotary hook point with the needle center.

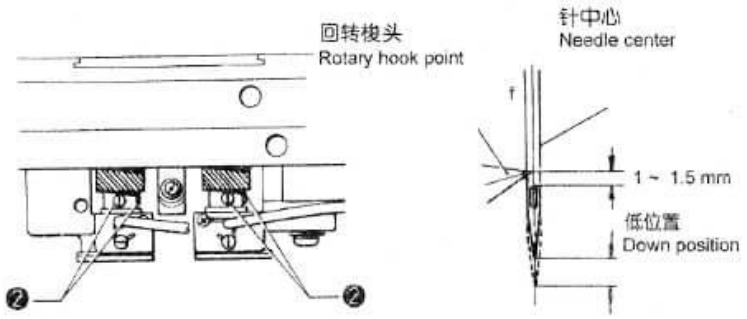

10 接上针板
Attach the needle plate.

11 接上压脚
Attach the presser foot.

842
845 — 2.4 mm

故障检查指南

TROUBLESHOOTING GUIDE

在呼叫服务站前，确定先检查以下各项

Be sure to check the following before calling an authorized service station.

问　题　Problem	检查页数　Where to check (page)
1.Sewinh machine pulley doesn't turn. 皮带轮不转 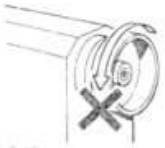	● Is a breader or fuse blown? ● Is the power cord disconnected? 断电器或保险丝断了? 电源未接妥?
上线与底线会断 2. Needle thread and bobbin thread break 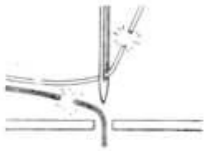	针头弯曲? 针头钝了? 针装置适当吗? (P.12) 机器适当地穿线了吗? (p.14 . 15) 回转梭头适当地润滑了吗? (p.10) 回转梭头中有灰尘或是线? ● Is the needle tip bent? ● Is the needle tip blunt? ● Is the needle properly installed?(P.12) ● Is the machine properly threaded?(p.14 and 15) ● Is the rotary hook properly lubricated?(p.10) ● Is dust or thread in the rotary hook?
缝合线不配合 3. Seams don't match 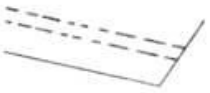	压脚压力太弱? (p.16) 送布齿太低? (p.26) 内梭壳损坏? V形皮带张力太低? (p.8) ● Is the presser foot pressure too weak?(p.16) ● Is the feed dog too low?(p.26) ● Is the bobbin scratched? ● Is the V-belt tension too low?(p.8)
跳针 4. Skipped stitches 	针尖弯了吗? 针是否装置适当? 压脚压力太弱? (p.16) 机器适当地穿线了吗? (p.14-15) 针尖钝了吗? 缝纫速度太快了? ● Is the needle tip bent? ● Is the needle properly installed? ● Is the presser foot pressure too weak?(p.16) ● Is the machine properly threaded?(p.14 and 15) ● Is the needle tip blunt? ● Is the sewing speed too fast?
线的紧度不够 5. Poor thread tightening 	调线弹簧运作范围太小? (p.18) 针线松紧或与底线松紧太低? (p.16) 内梭壳损坏? 机器适当穿了吗? (p.14-15) ● Is the thread take-up spring cperating range too small?(p.18) ● Is the needle thread tension and/or bobbin thread tension too low?(p.16) ● Is the bobbin scratched? ● Is the machine properly threaded?(p.14 and 15)
断针 6.Broken needles 	针尖弯曲? 针尖钝? 针是否通过送布齿的针孔中心? ● Is the needle tip bent? ● Is the needle tip blunt? ● Does the needle pass the center of needle hole in the feed dog?

Caution

If problem 2 to 6 above are not due to the cause to the right,check the needle and feed timing,or the needle and totary hook timing.If the problem persists,turn the power off and consult your dealer.

注意：如上述问题 2 至 6 不适合在上述原因时，检查针与送布牙的时候配，或者针与回转梭头的时配。

如果问题持续，关掉电源与你的经销商洽商。

A. 机壳部分/Machine boby

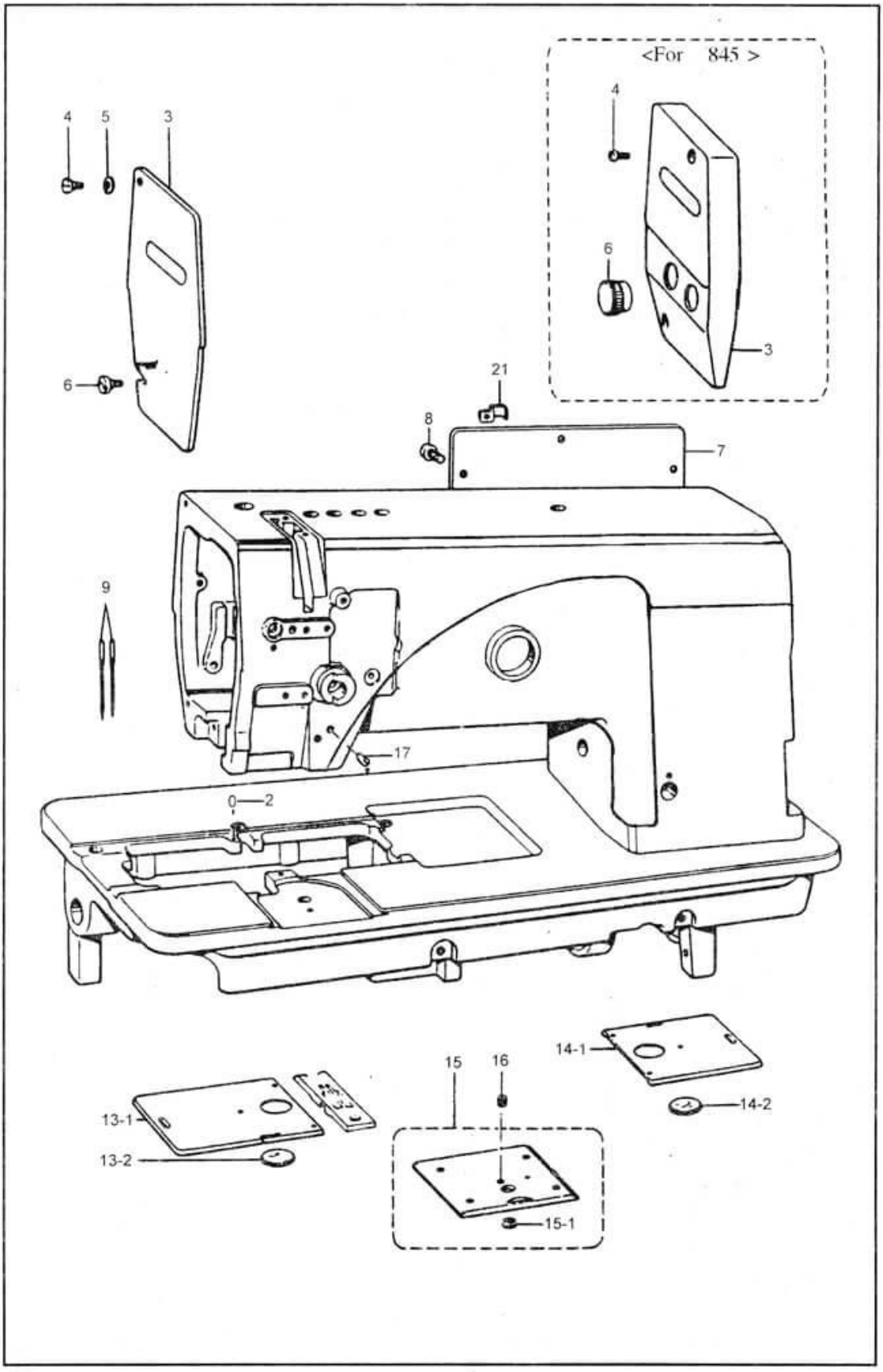

A.机壳部分/Machine body

序号 REF NO	件号 CODE	NAME OF PARTS	名　　称	数量 QTY
2	113386000	PIN	针板销	1
3	S07316009	FACE PLATE	面板	1
4	S07317001	STUD SCREW 3.57	面板上螺钉	1
5	146598001	APRING WACHIER	面板上螺钉垫圈	1
6	129984002	SCREW 3.57	面板下螺钉	1
7	S02499009	REAR COVER	后窗板	1
8	062681012	SCREW 4.37X8	后窗板螺钉	7
<-3>				
9	107415014	NEEDLE DPX5(#14)	机针	2
<-5>				
9	107415014	NEEDLE DPX5(#19)	机针	2
<-7>				
9	107415014	NEEDLE DPX5(#22)	机针	2
13-1	S34307001	SLIDE PLATE(L)	左推板	1
13-2	S07320000	BOBBIN WINDOW	透视窗	1
14-1	S34310001	SLIDE PLATE(R)	右推板	1
14-2	S34311001	BOBBIN WINDOW	透视窗	1
15	S07320000	SLIDE PLATE(F)ASSEMBLY	前推板组件	1
16	S36663001	SET SCREW M5X0.8	前推板紧定螺钉	1
17	S34438001	SET SCREW 4.37	螺钉	2
<自动切线/THREAD TRIMMER>				
15	116010001	SLIDE PLATE (F)ASSEMBLY	前推板组件	1
21	S07327001	CORD HOLDER	电线固定板	3
< 845 >				
3	S07327001	FACE PLATE	面板	1
4	113760001	SCREW 3.57X10	面板上螺钉	2
6	159928009	FACE PLATE CAP	面板塞	2

◎印有★符号的零件请参照P32~33页指示

◎Refer to page 32~33 for items marked with an asterisk (★)

B. 上轴机构/Upper shaft mechanism

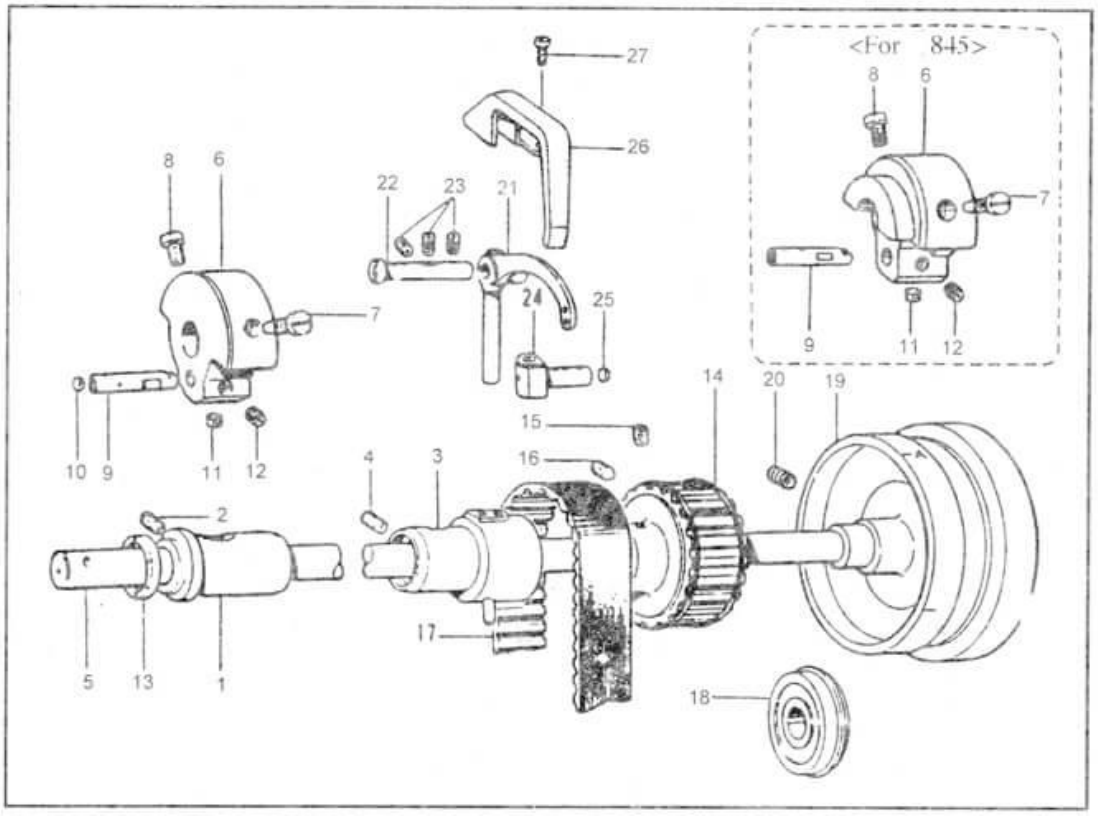

C. 针杆机构 /Needle bar rocking mechanism

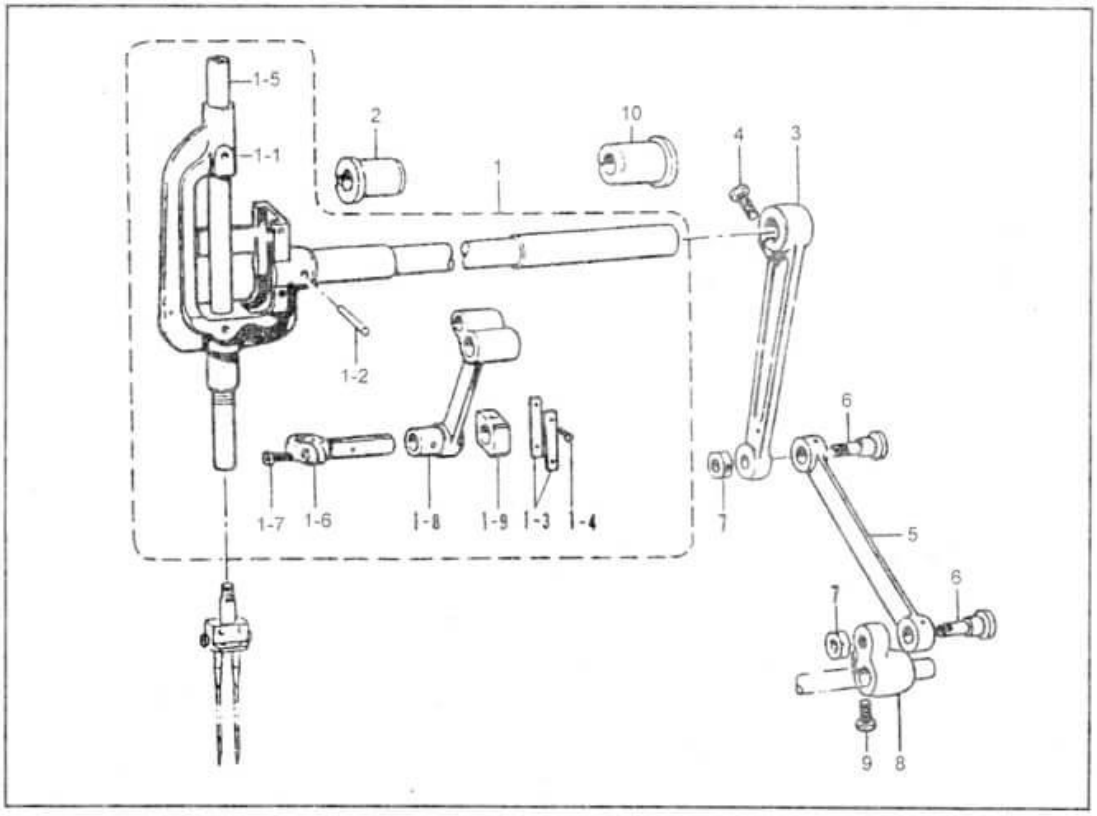

B. 上轴机构/Upper shaft mechanism

序号 REF NO	件号 CODE	NAME OF PARTS	名　　称	数量 QTY
1	S38270001	UPPER SHAFT BUSH(L)	上轴前轴套	1
2	014781032	SET SCREW 6.35	上轴前轴套紧定螺钉	1
3	S07330201	UPPER SHAFT BUSH (M)ASSEMBLY	上轴中轴套	1
4	014780622	SET SCREW 6.35	上轴中轴套紧定螺钉	1
5	S07329001	UPPER SHAFT	上轴	1
6	S38396000	THREAD TAKE-UP CRANK	针杆曲柄	1
7	100250001	SCREW7.14	针杆曲柄定位螺钉	1
8	146141001	SET SCREW7.14	针杆曲柄螺钉	1
9	S38398001	NEEDLE BAR CRANK	针杆曲柄销	1
10	113014000	PUSHER	塞子	1
11	101706001	SET SCREW 6.35	针杆曲柄销定位螺钉	1
12	100251001	SET SCREW 6.35	针杆曲柄销固定螺钉	1
13	112576001	THREAD TAKE-UP CRANK RING	上轴前轴套套圈	1
14	S38242051	TIMING BELT WHEEL(U)ASSEMBLY	上齿形带轮	1
15	014771022	SET SCREW 6.35	上齿形带轮固定螺钉	1
16	016771032	SET SCREW 6.35X10	上齿形带轮定位螺钉	1
17	S38244000	TIMING BILT	同步齿形带	1
18	158115001	BALL BEARING 6204ZZNR	轴承	1
19	144614109	PULLEY	上轮	1
20	S33689002	SET SCREW 5.95X14	上轮螺钉	2
< 845 >				
21	S38392001	THREAD TAKE-UP	挑线杆	1
< 845 >				
21	S38392001	THREAD TAKE-UP	挑线杆	1
22	S07334001	THREAD TAKE-UP SHAFT	挑线连杆铰链轴	1
23	014781032	SET SCREW 6.35	挑线连杆铰链轴螺钉	3
24	113024000	THREAD TAKE-UP SLIDE BLOCK	挑线杆连接柱	1
25	113024000	PUSHER	塞子	1
26	S07339109	THREAD TAKE-UP COVER	挑线防护罩	1
27	062670512	SCREW 3.57X5	挑线防护罩螺钉	2
< 845 >				
24	113024000	THREAD TAKE-UP SLIDE BLODK	挑线杆连接柱	1
6	S38396000	THREAD TAKE-UP CRAND	针杆曲柄	1
9	S38398001	NEEDLE BAR CRANK	针杆曲柄销	1
<自动切线/THREAD TRIMMER>				
19	144614109	PULLEY	上轮	1

C 针杆机构/Needle bar rocking mechanism

序号	件　　号	NAME OF PARTS	名　称	数量
1	159359301	NEEDLE BAR ROCK SHAFT ASSEMBLY	针杆支架、摆轴组件	1
1-1	112588101	NEEDLE BAR SUPPORT	摆针轴	1
1-2	S30570001	TAPER PIN	锥销	1
1-3	112590001	GUIDE PLATE	导轨衬板	2
1-4	102731004	SCREW 2.38	导轨衬板螺钉	4
1-5	159360201	NEEDLE BAR	针杆	1
1-6	112592001	NEEDLE BAR CLAMP	针杆连接柱	1
1-7	112593001	SCREW 3.57X8	针杆连接柱螺钉	1
1-8	112721001	NEEDLE BAR CRAND ROD	三眼连杆	1
1-9	★	NEEDLE BAR GUIDE SLIDE BLOCK	针杆支架滑块	1
2	112594001	NEEDLE BAR ROCK SHAFT BUSH(L)	摆轴前轴套	1
3	112595000	NEEDLE BAR CONNECTING ROD	摆轴大连杆	1
4	105351002	SCREW 6.35	螺钉	1
5	112596101	NEEDLE BAR ROCK LINK	摆轴小连杆	1
6	112597101	NEEDLE BAR ROCK LINK STUD	摆轴连杆螺钉	2
7	101268002	NUT 7.94	摆轴连杆螺母	2
8	112598001	NEEDLE BAR CONNECTING CRANK	摆轴曲柄	1
9	S01304001	SCREW 6.35X18	摆轴曲柄螺钉	1
10	112764001	NEEDLE BAR ROCK SHAFT BUSH(R)	摆轴后轴套	1

C.(845) 针杆机构/Needle bar rocking mechanism

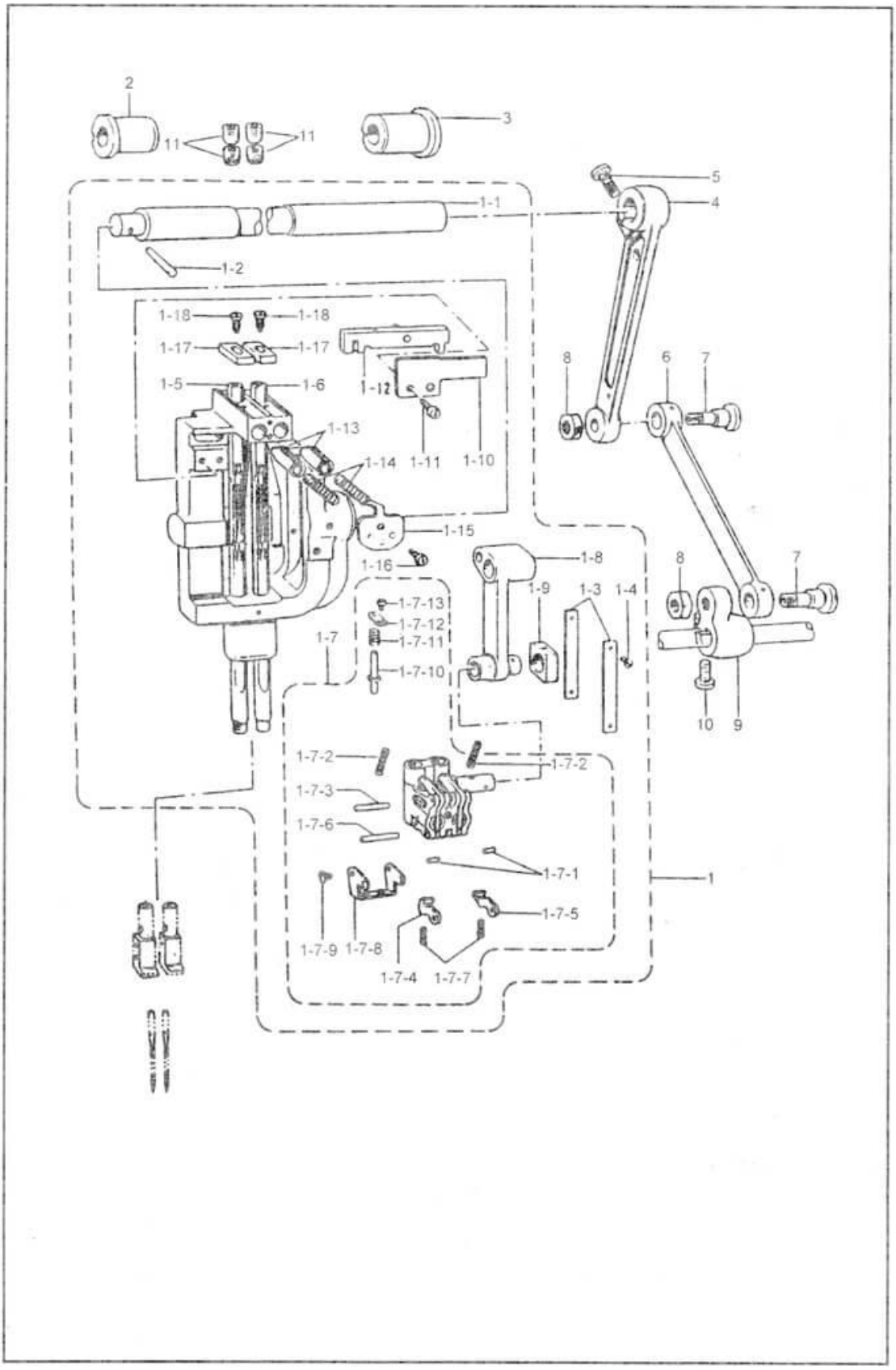

C.针杆机构(845用)/Needle bar rocking mechanism(For 845)

序号 REF NO	件号 CODE	NAME OF PARTS	名 称	数量 QTY
1	159359301	NEEDLE BAR ROCK SHAFT ASSEMBLY	针杆组件	1
1-1	112588101	NEEDLE BAR ROCK SHAFT	摆针轴	1
1-2	107030001	TAPER PIN	锥销	1
1-3	112590001	GUIDE PLATE	导片	2
1-4	102731004	SCREW 2.38	螺钉	4
<-3,-5>				
1-5	159360201	NEEDLE BAR(L)ASSEMBLY	针杆（左）	1
1-6	112592001	NEEDLE BAR(R)ASSEMBLY	针杆（右）	1
<-7>				
1-5	159360201	NEEDLE BAR(L)ASSEMBLY	针杆（左）	1
1-6	112592001	NEEDLE BAR(R)ASSEMBLY	针杆（右）	1
1-7	112593001	NEEDLE BAR CLAMP ASSEMBLY	针杆钳组件	1
1-7-1	149604001	PIN 1.5X5.8	销	2
1-7-2	149605001	SPRING	弹簧	2
1-7-3	149827001	PIN 2X15.8	销	1
1-7-4	149606001	CLUTCH STOPPER(L)	离合制止器（左）	1
1-7-5	149607001	CLUTCH STOPPER(R)	离合制止器（右）	1
1-7-6	149608001	PIN 2X17.8	销	1
1-7-7	112609001	SPRING	弹簧	2
1-7-8	149609001	SPRING HOLDER	弹簧座	1
1-7-9	100105005	SCREW 2.38	螺钉	2
1-7-10	149610001	PIN	销	1
1-7-11	149611101	SPRING	弹簧	1
1-7-12	149612101	PIN COVER	销导片	1
1-7-13	114447002	SCREW 2.38	螺钉	1
1-8	149613001	NEEDLE BAR CRANK ROD	三眼连杆	1
1-9	150816001	SLIDE BLOCK	针杆支架滑块	1
1-10	S07574001	SLIDE BLOCK GUIDE PLATE	滑动导片	1
1-11	062670812	SCREW 3.57X8	螺钉	2
1-12	S07575001	SLIDE BLOCK ASSEMBLY	滑动组件	1
1-13	149621001	NEEDLE BAR STOPPER	针杆制止器	2
1-14	14962201	SPRING	弹簧	2
1-15	149623001	SPRING COVER	弹簧盖	1
1-16	060660512	SCREW 3.18X5	螺钉	1
1-17	149624001	NEEDLE BAR ROTATE STOPPER	针杆防转导块	2
1-18	149625001	SCREW 3.18	螺钉	2
2	149625001	NEEDLE BAR ROCK SHAFT BUSH(L)	摆轴前轴套	1
3	112764001	NEEDLE BAR ROCK SHAFT BUSH(R)	摆轴后轴套	1
4	112595000	NEEDLE BAR CONNECTING ROD	摆轴大连杆	1
5	105351002	SCREW 6.35	螺钉	1
6	112596101	NEEDLE BAR ROCK LINK	摆轴小连杆	1
7	112597101	NEEDLE BAR ROCK LINK STUD	摆轴连杆螺钉	2
8	101268002	NUT 7.94	摆轴连杆螺母	2
9	112598001	NEEDLE BAR CONNECTING CRANK	摆轴曲柄	1
10	S01304001	SCREW 6.35X18	摆轴曲柄螺钉	1
11		SCREW 7.94	螺钉	4

D. 压脚机构/Presser foot mechanism

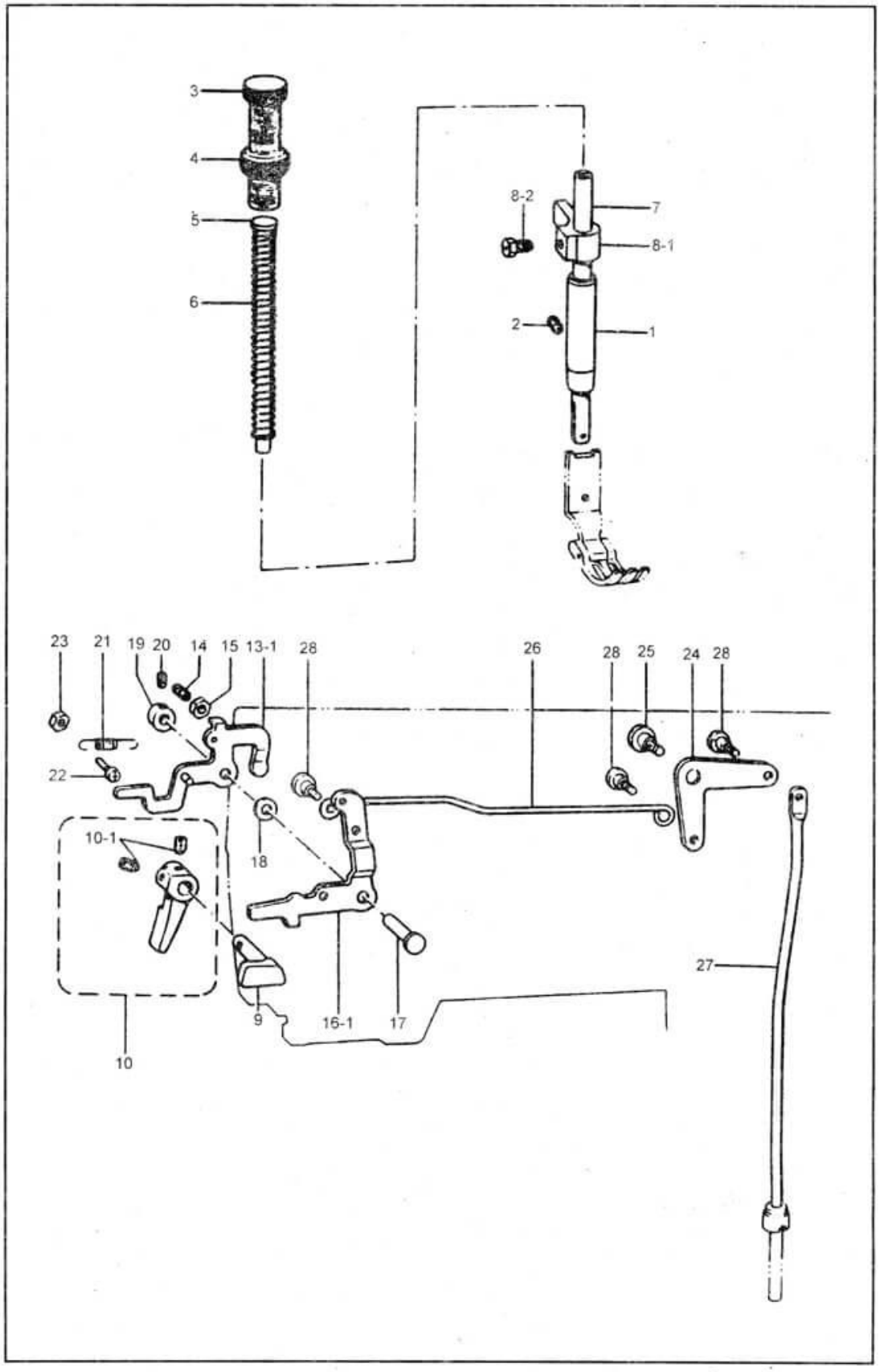

D.压脚机构/Presser foot mechanism

序号 REF NO	件号 CODE	NAME OF PARTS	名　　称	数量 QTY
1	145472001	PRESSER BAR BUSH	压杆轴套	1
2	014781032	SET SCREW 6.35	压杆轴套螺钉	1
3	S31012001	PRESSER ADJUSTING SCREW	调压螺钉	1
4	S31013001	NUT	调压螺母	1
5	141208001	PRESSER SPRING GUIDE	压杆弹簧导柱	1
6	S07346101	PRESSER SPRING	压杆弹簧	1
7	S07345001	PRESSER BAR	压杆	1
8-1	147513001	PRESSER BAR GUIDE CLAMP	压杆导架	1
8-2	142403001	SCREW 5.95	压杆导架螺钉	1
9	S07347101	PRESSER BAR LIFTER CRANK	压杆提升凸轮	1
10	S31006001	PRESSER BAR LIFTER LEVER	压脚扳手	1
10-1	062351216	SET SCREW 4.76	压脚扳手螺钉	2
13-1	S07353001	TENSION RELEASE PLATE ASSEMBLY	膝提前内板	1
14	S07356001	SET SCREW 6.35	前内板调压螺钉	1
15	150556001	NUT-6.35	前内板调压螺母	1
16-1	S07348001	PRESSER LIFTER LEVER	膝提前外板	1
17	S07349001	PRESSER LIFTER LEVER STUD	膝提前拔销	1
18	S07350001	WASHER	膝提内外板垫	1
19	139096001	SET COLLAR	前拔销紧圈	1
20	014680422	SET SCREW 4.37	前拔销紧圈螺钉	2
21	S07355001	PRESSER LIFTER LEVER SPRING	膝控前板拉簧	1
22	062671412	SCREW 3.57X14	膝控前板螺钉	1
23	021670102	NUT 3.57	螺母	1
24	S07358001	KNEE LIFTER LEVER	膝控提前升后杠杆	1
25	145480101	STUD SCREW 6.35	拉杆螺钉	1
26	S07357001	KNEE LIFTER CONNECTOR	膝拉提升拉杆	1
27	S07359001	KNEE LIFTER BAR	膝拉提升杆	1
28	145478101	STUD SCREW 4.76	膝拉提升杆螺钉	3
<自动切线/THREAD TRIMMER>				
13-1	S07353001	TENSION RELEASE PLATE ASSEMBLY	膝提前内板	1

E. 送布机构/Feed mechanism

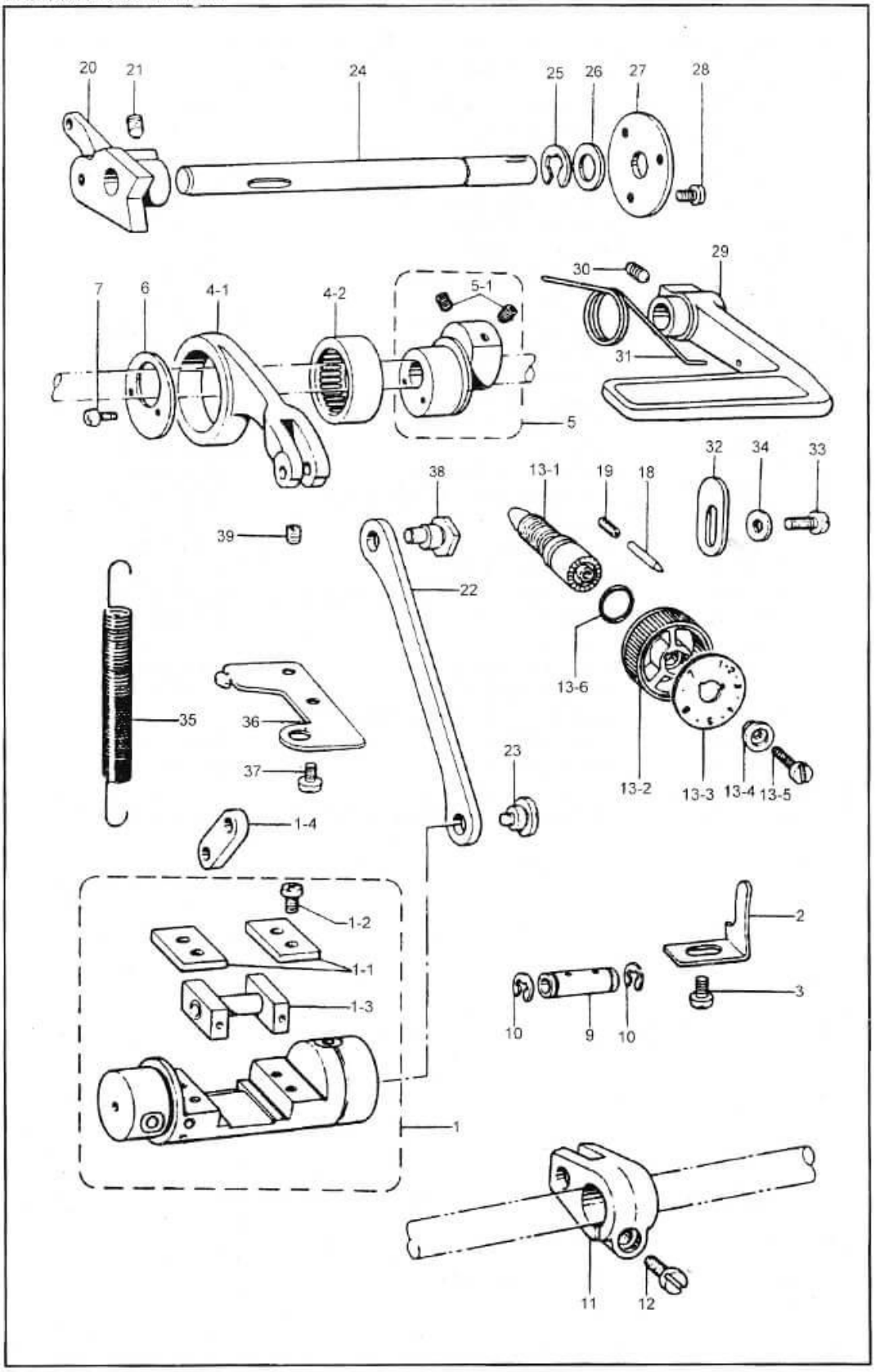

E.送布机构/Feed mechanism

序号 REF NO	件号 CODE	NAME OF PARTS	名　　称	数量 QTY
1	S07366001	FEED REGULATOR ASSEMBLY	送布调整轴组件	1
1-1	S07363001	SLIDE BLOCK GUIDE PLATE	滑块导板	2
1-2	062681012	SCREW 4.37X10	螺钉	4
1-3	S07364001	FEED REGULATOR SLIDE ASSEMBLY	倒缝滑块组件	1
1-4	143613001	FEED ROCK ARM LINK	送布摇动臂连板	1
2	S07379001	FEED REGULATOR STOPPER	送布调整轴挡片	1
3	062710612	SCREW 4.76X6	送布调整轴挡片螺钉	1
4-1	143612000	FEED ROCK CONNECTING ROD	送布摇动连杆	1
4-2	118954000	NEEDLE BEARING	针状轴承	1
5	148802301	LEVEL FEED ECCENTRIC WHEEL	送布偏心轮	1
5-1	014771022	SET SCREW 6.35	送布偏心轮螺钉	2
6	S07378001	BEARING COVER	轴承挡片	1
7	062670812	SCREW 3.57X8	轴承挡片螺钉	2
9	143616001	FEED ROCK ARM STUD	送布曲柄销	1
10	048060342	STOP RING E6	卡簧	2
11	148495001	FEED ROCK ARM	送布曲柄	1
12	S01304001	SCREW 6.35X18	送布曲柄螺钉	1
13-1	159361001(845)	LENGTH REGUALATING SCREW	针距调节螺钉	1
13-2	129500010(845)	STITCH LENGTH CONTROL DIAL	针距表盘	1
13-3	S07674009(845)	STITCH LENGTH CONTROL PLATE	针距表盘刻度板	1
13-4	142746002	LENGTH CONTROL PLATE SUPPORTER	针距表盘套	1
13-5	129458002	SCREW 4.76	螺钉	1
13-6	108549001	ORING	针距调节螺杆O型圈	1
18	145502001	PIN	止动销	1
19	100328001	SPRING	止动销弹簧	1
20	S07368101	FEED REGULATOR	针距座	1
21	118853001	SET SCREW 5.95	针距座定位螺钉	2
22	S07369001	FEED REGULATOR CONNECT LINK	针距连杆	1
23	S07370101	STUD SCREW 5.95	针距连杆螺钉	1
24	S07371001	FEED REGULATOR LEVER SHAFT	倒缝扳手轴	1
25	048060342	STOP RING E8	卡簧	1
26	025100132	PLAIN WASHER 10	倒缝扳手挡板垫圈	1
27	147504001	STOPPER WASHER	倒缝扳手轴挡板	1
28	062670712	SCREW 3.57X5	倒缝扳手挡板螺钉	3
29		RECERSE LECER	倒缝扳手螺钉	1
30	118853001	SET SCREW 5.95	螺钉	1
31	S07375001	SPRING	倒缝扳手复位簧	1
32	S07380001	RECERSE LEVER STOPPER	限位板	1
33	062711012	SCREW 4.76X10	限位板螺钉	1
34	025710232	PLAIN WASHER 4.76	限位螺钉垫圈	1
35	S07376001	FEED REGULATOR SPRING	针距座弹簧	1
36	S07377001	SPRING HOOK	弹簧吊勾	1
37	062710612	SCREW 4.76X10	弹簧吊勾螺钉	2
38	S12698001	FEED REGULATOR ECCENTRIC WHEEL	送布调整偏心轴	1
39	014760622	SET SCREW 4.76	送布调整偏心轴螺钉	1
<自动切线/THREAD TRIMMER>				
24	S07371001	FEED REGULATOR LEVER SHAFT	倒缝扳手轴	1
29	S07374009	REVERSE LEVER	倒缝扳手	1

F.送料轴机构 /Feed shaft mechanism

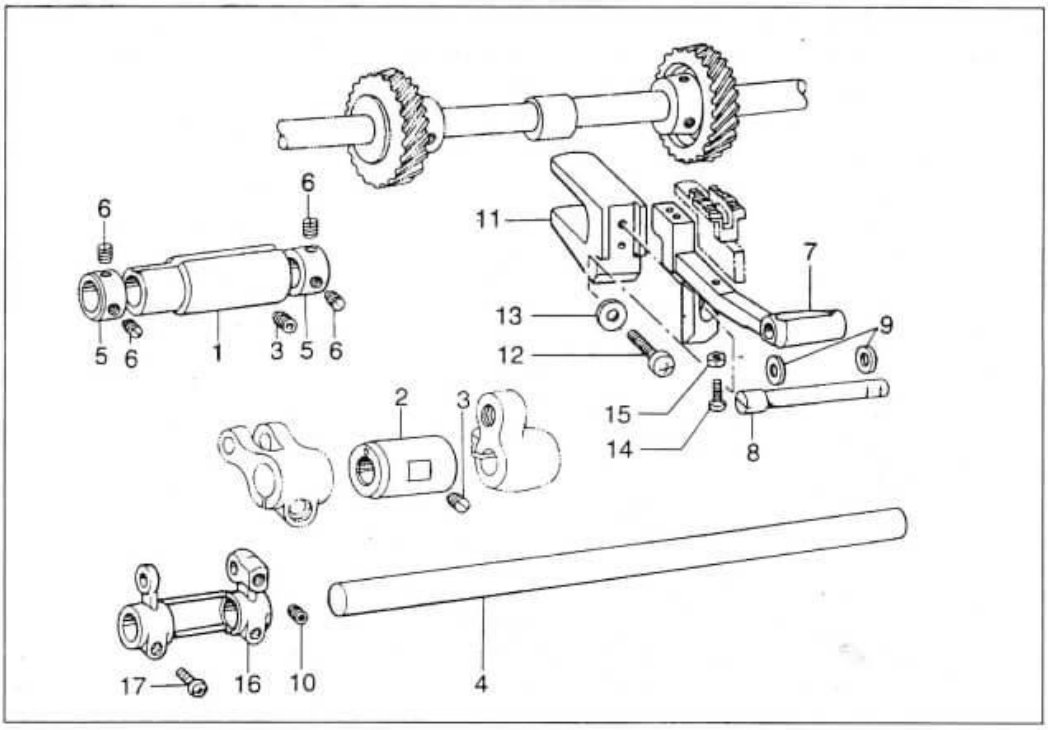

F. 送料轴机构/Feed shaft mechanism

序号 REF NO	件号 CODE	NAME OF PARTS	名 称	数量 QTY
1	148494001	FEED SHAFT BUSH(L)	送料轴前套	1
2	S07386001	FEED SHAFT BUSH(R)	送料轴后套	1
3	014781032	SET SCREW 6.35	轴套固定螺钉	2
4	S38271001	FEED ROCK SHAFT SET	送料轴	1
5	113074001	SET COLLAR	上推环	2
6	101706001	SET SCREW 6.35	上推环螺钉	4
7	S07387001	FEED BAR	牙架	1
8	148491001	FEED BAR SHAFT	牙架销	1
9	143591001	THRUST RING	牙架销垫圈	2
10	014760622	SET SCREW 4.37	牙架销螺钉	1
11	112656001	FEED BAR FORK	抬牙叉	1
12	062761412	SCREW 5.95X14	抬牙叉固定螺钉	1
13	025060132	PLAIN WASHER	抬牙叉固定螺钉垫圈	1
14	062661212	SCREW 3.18X12	送料牙调整螺钉	1
15	021660102	NUT 3.18	送料牙调整螺母	1
<自动切线/THREAD TRIMMER>				
16	S38272000	FEED ROCK BASE ARM	牙架曲柄	1
17	062681212	FEED BAR	牙架曲柄螺钉	1

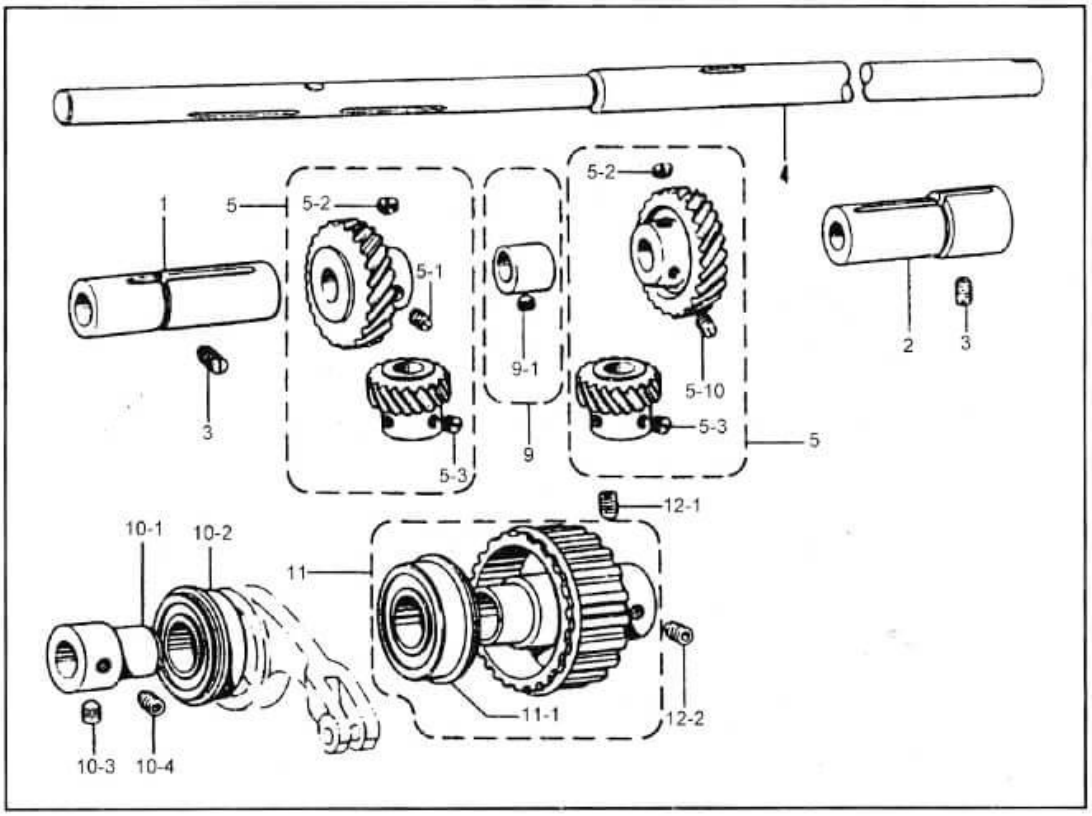

J.下轴机构/Feed shaft mechanism

序号 REF NO	件号 CODE	NAME OF PARTS	名　　称	数量 QTY
1	S38293000	ROTARY HOOK BASE BUSH(L)	下轴前轴套	1
2	S38249001	ROTARY HOOK BASE BUSH(R)	下轴中轴套	1
3	014781032	SET SCREW 6.35	轴套螺钉	2
4	S38253001	LOWER SHAFT	下轴	1
5	S12445001	SPIRAL GEAR ASSEMBLY(A)	梭轴齿轮组件	2
5-1	112684001	SET SCREW 6.36	齿轮定位螺钉	2
5-2	100251001	SET SCREW 6.35	固定螺钉	4
5-3	131007001	SET SCREW 6.35	齿轮螺钉	6
9	181486001	VERTICAL FEED ECCENTRIC WHEEL	抬牙偏心轮	1
9-1	112684001	SET SCREW 6.35	抬牙偏心轮螺钉	1
10-1	S07447001	BALL BEARING RUSH	轴承衬套组件	1
10-2	072600480	BALL BEARING 6004ZZNR	滚珠轴承6004ZZNR	1
10-3	148821001	SET SCREW 6.35	轴承衬套定位螺钉	
10-4	014771022	SET SCREW 6.35	轴承衬套螺钉	1
11	S38237001	TIMING PULLEY (D)ASSEMBLY	下齿形带轮组件	1
11-1	072600480	BALL BEARING 6204ZZNR	滚珠轴承6204ZZNR	1
12-1	014771022	SET SCREW 6.35	下齿形带轮螺钉	1
12-2	148821001	SET SCREW 6.35	下齿形带轮定位螺钉	1
<自动切线/THREAD TRIMMER>				
4	S38252001	LOWER SHAFT	下轴	1
11	S12445001	TIMING PULLEY (D) ASSEMBLY	下齿形带轮组件	1

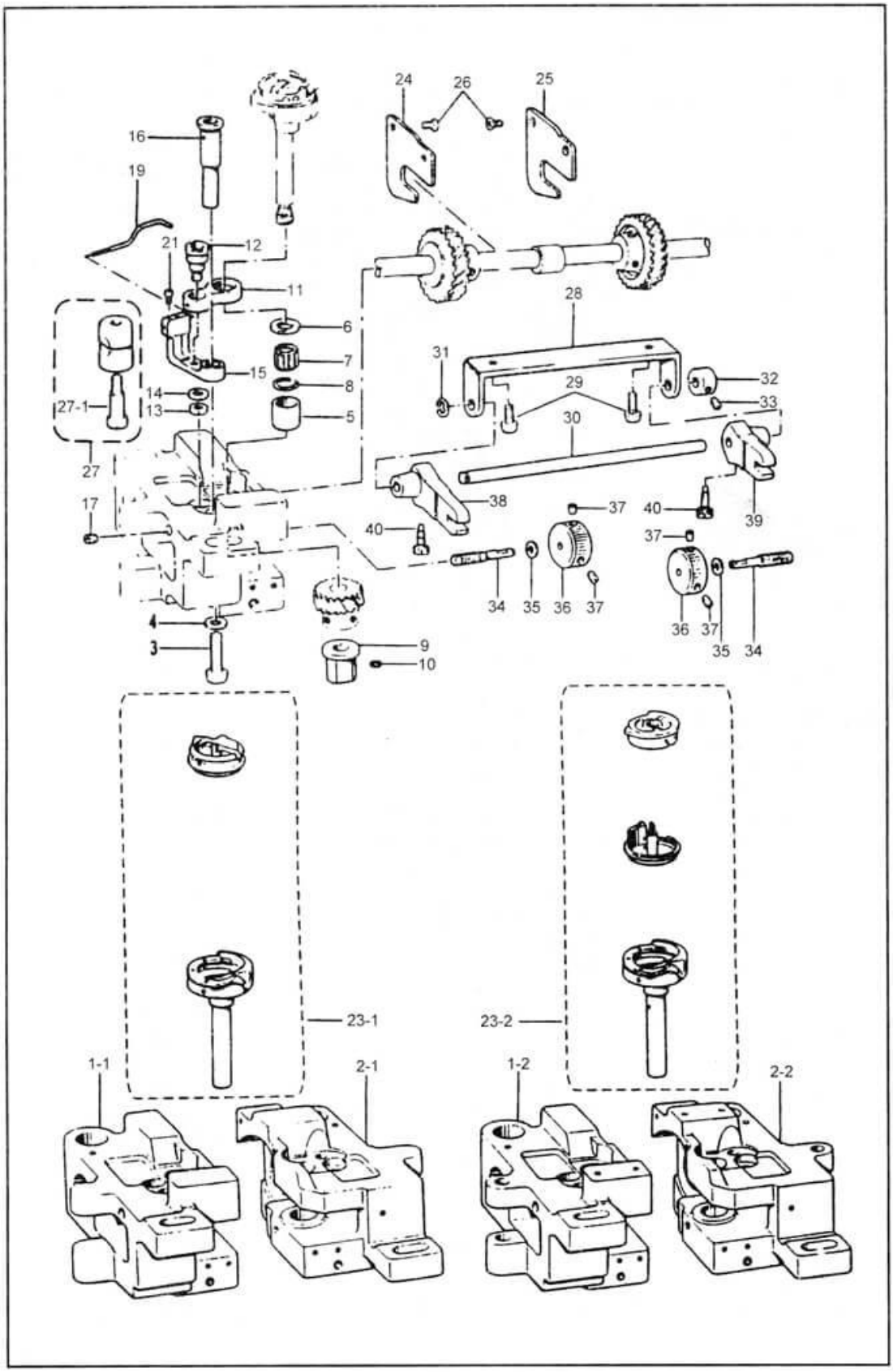
24
26
25
16
19
21
12
11
6
7
8
5
15
14
13
27-1
27
17
28
31
29
30
32
33
38
37
40
39
34
35
36
4
3
9
10
23-1
23-2
1-1
2-1
1-2
2-2

H .旋梭机构/Rotary hook mechanism

序号 REF NO	件号 CODE	NAME OF PARTS	名　　称	数量 QTY
3	062782512	SCREW 6.35X25	梭架固定螺钉	2
4	100197002	WASHER	梭架固定螺钉垫圈	2
< 845 >				
5	S07418001	ROTARY HOOK SHAFT BUSH(U)	梭轴上轴套	2
15	110161006	OPENER LEVER	分线摆动连杆	2
< 845 >				
5	S07418001	ROTARY HOOK SHAFT BUSH(U)	梭轴上轴套	2
15	110161006	OPENER LEVER	分线摆动连杆	2
7	S07420000	NEEDLE BAARING	滚针轴承	2
8	S07419001	STOP RING	梭轴上轴套挡圈	2
9	S07417001	ROTARY HOOK SHAFT BUSH(D)	梭轴下轴套	2
10	013710512	SET SCREW 4.76	梭轴下轴套螺钉	2
11	112692101	OPENER LINK	分线连杆	2
12	S38211051	OPENER LINK SHAFT	分线连杆连接轴	2
13	148005001	NUT 4.76	螺母	2
14	025710232	PLAIN WASHER 4.76	垫圈	2
16	S13021001	OPENER LEVER SHAFT	摆动杆轴	2
17	013711012	SET SCREW 4.76	摆动杆轴固定螺钉	2
19	S38212001	OPENER	分线勾	2
21	154965001	SET SCREW 3.18	分线勾固定螺钉	4
23-1	★	ROTARY HOOK ASSEMBLY	旋梭组件	2
23-2	★	ROTARY HOOK ASSEMBLY	旋梭组件	2
24	S07436001	GEAR GUIDE	齿轮挡片（左）	1
25	S07437001	GEAR GUIDE	齿轮挡片（右）	1
26	108960002	SCREW 3.57	齿轮挡片螺钉	4
27	S07658001	PING SLEEVE ASSEMBLY	销紧套和管组件	2
27-1	112700001	SCREW 5.95	销紧套管螺钉	2
28	S07430001	ADJUSTING BAR SUPPORTER	调整杆支架	1
29	062711012	SCREW 4.76X10	螺钉	2
30	S07431001	ADJUSTING BAR	调整杆	1
31	048040342	STOP PING E4	调整杆卡簧	1
32	159436001	SET COLLAR	止推环	1
33	014680622	SET SCREW 4.37	止推环螺钉	1
34	S07434101	ROTARY HOOK BASE ADJUSTING SCREW	梭架调整螺栓	2
35	025680132	PLAIN WASHER 4.37	梭架调整垫片	2
36	S07435001	ROTARY HOOK BASE ADJUSTING DIAL	调整旋钮	2
37	014680622	SET SCREW 4.37	旋钮紧固螺钉	4
38	S34436001	ADJUSTING FORKED LEVER(L)	调整叉杆（左）	1
39	S34435001	ADJUSTING FORKED LEVER(R)	调整叉杆（右）	1
40	131226001	NEEDLE SET SCREW 3.57	调整叉杆固定螺钉	2
< 842 >				
1-1	S07416201	ROTARY HOOK BASE(L)	梭架（左）	1
2-1	S07414201	ROTARY HOOK BASE(R)	梭架（右）	1
6	S07421001	THRUST RING(A)1.5MM	轴承端盖	2
< 845 >				
4-2	S07416201	ROTARY HOOK BASE(L)	梭架（左）	1
2-2	S07414201	ROTARY HOOK BASE(R)	梭架（右）	1
6	S07421001	THRUST RING(A)1.2MM	轴承端盖	2
<自动切线/THREAD TRIMMER>				
1-1	S07416201	ROTARY HOOK BASE(L)	梭架（左）	1
2-1	S07414201	ROTARY HOOK BASE(R)	梭架（右）	1
6	S07421001	THRUST RING(A)1.7MM	轴承端盖	2
<自动切线/THREAD TRIMMER>				
1-2	S07416201	ROTARY HOOK BASE(L)	梭架（左）	1
2-2	S07414201	ROTARY HOOK BASE(R)	梭架（右）	1
6	S07421001	THRUST RING(A)1.4MM	轴承端盖	2

◎印有★符号的零件请参照P31页指示

◎Refer to page 31 for items marked with an asterisk (★)

k. 润滑部份 /Lubrication

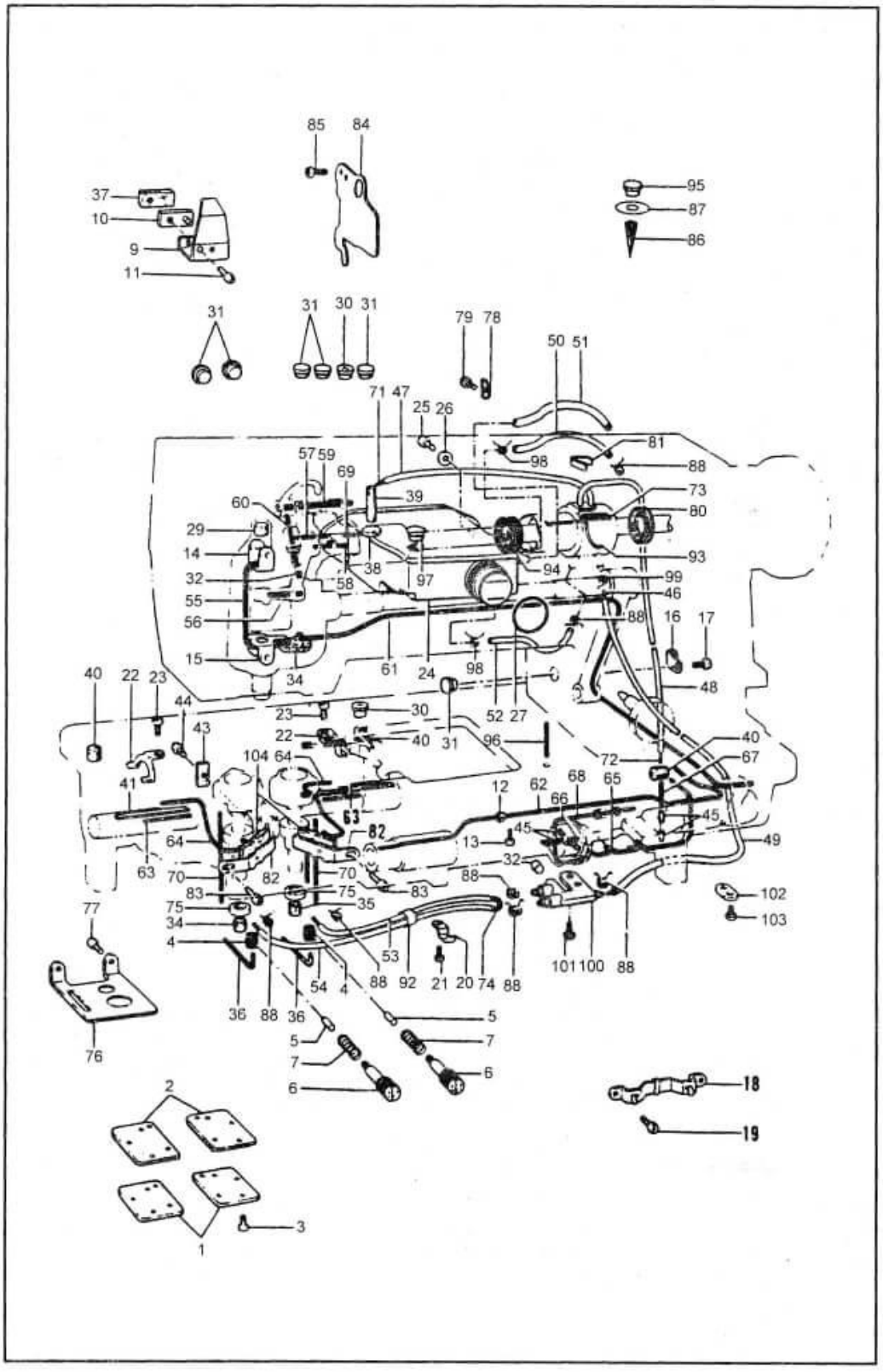

k.润滑机构/Lubrication

序号 REF NO	件号 CODE	NAME OF PARTS	名　　称	数量 QTY
1	S07448001	ROTARY HOOK BASE COVER	梭架盖	2
2	S07449000	ROTARY HOOK BASE PACKING	梭架垫片	2
3	062670815	SCREW 3.57X8	回油盒螺钉	8
4	S07477000	RUBBER RING	油量调节套	2
5	S07478000	RUBBER PRESSER	油量调节塞	2
6	S38292001	OIL ADJUSTING SCREW	油量调节螺钉	2
7	S38299001	SET SPRING	油量调节簧	2
9	150988001	OIL STOPPER PLATE	挡油板	1
10	112717001	OIL STOPPER PLATE PRESSER	挡油压板	1
11	062711212	SCREW 4.76X12	挡油板螺钉	1
12	112743001	WICK SUPPORTER	送料轴油线支架	1
13	060670512	SCREW 3.57X5	送料轴油线支架螺钉	1
16	112739001	WICK SUPPORTER	油线支架	1
17	062670512	SCREW 3.57X5	油线支架螺钉	1
18	143673001	WICK HOLDER	油线支架	1
19	062660412	SCREW 3.18X4	油线支架螺钉	2
20	142268001	CORD HOLDER(L)	油管支架	1
21	062670512	SCREW 3.57X5	螺钉	1
22	S07471001	WICK HOLDER	油线支架	2
23	062670512	SCREW 3.57X5	螺钉	2
24	S38417001	OIL TAND ASSEMBLY	油盒组件	1
25	062711012	SCREW 4.76X8	油盒盖螺钉	2
26	025710232	PLAIN WASHER 4.76	油盒盖螺钉垫片	2
27	081030070	O RING P30	油窗O形圈	1
30	140890009	OIL CAP	油塞	2
31	104821009	OIL CAP	油塞	5
32	142274009	OIL CAP	油塞	2
34	S07474000	FELT	毛毡	1
35	151927001	CLUTCH FELT	毛毡	2
36	S07476000	FELT	毛毡	2
37	148762001	FELT	毛毡	1
38	S38269000	UPPER SHAFT BUSH(L)FELT	上轴前套毛毡	1
39	S07571000	FELT	毛毡	1
40	112753001	FELT	毛毡	3
41	113362001	ROTARY HOOK BASE BUSH®FELT	梭架轴前套毛毡	2
43	112759001	FELT	毛毡	1
44	100257010	SCREW 3.57	螺钉	1
45	148743001	FELT	毛毡	4
46	S07460100	WIRE	油线	1
47	S07453000	OIL TUBE	油管	1
48	S07454000	OIL TUBE	油管	1
49	S07455100	OIL TUBE	油管	1
50	S07456000	OIL TUBE	油管	1
51	S07457100	OIL TUBE	油管	1
52	S07810000	OIL TUBE	油管	1
53	S07458100	OIL TUBE	油管	1
54	S07459100	OIL TUBE	油管	1
55	S07465000	WICK(20CM)	油线	1
56	112728001	WICK(5CM)	油线	1
57	114693001	WICK(3CM)	油线	1
58	112735000	WICK(4.5CM)	油线	1
59	S36670000	WICK(13CM)	油线	1
60	S03289001	WICK4X4(4CM)	油线	1
61	112736000	WICK(44CM)	油线	1
62	152974001	WICK4X4(35CM)	油线	1
63	S38481000	WICK(3.2CM)	油线	2
64	108802001	WICK(25CM)	油线	2

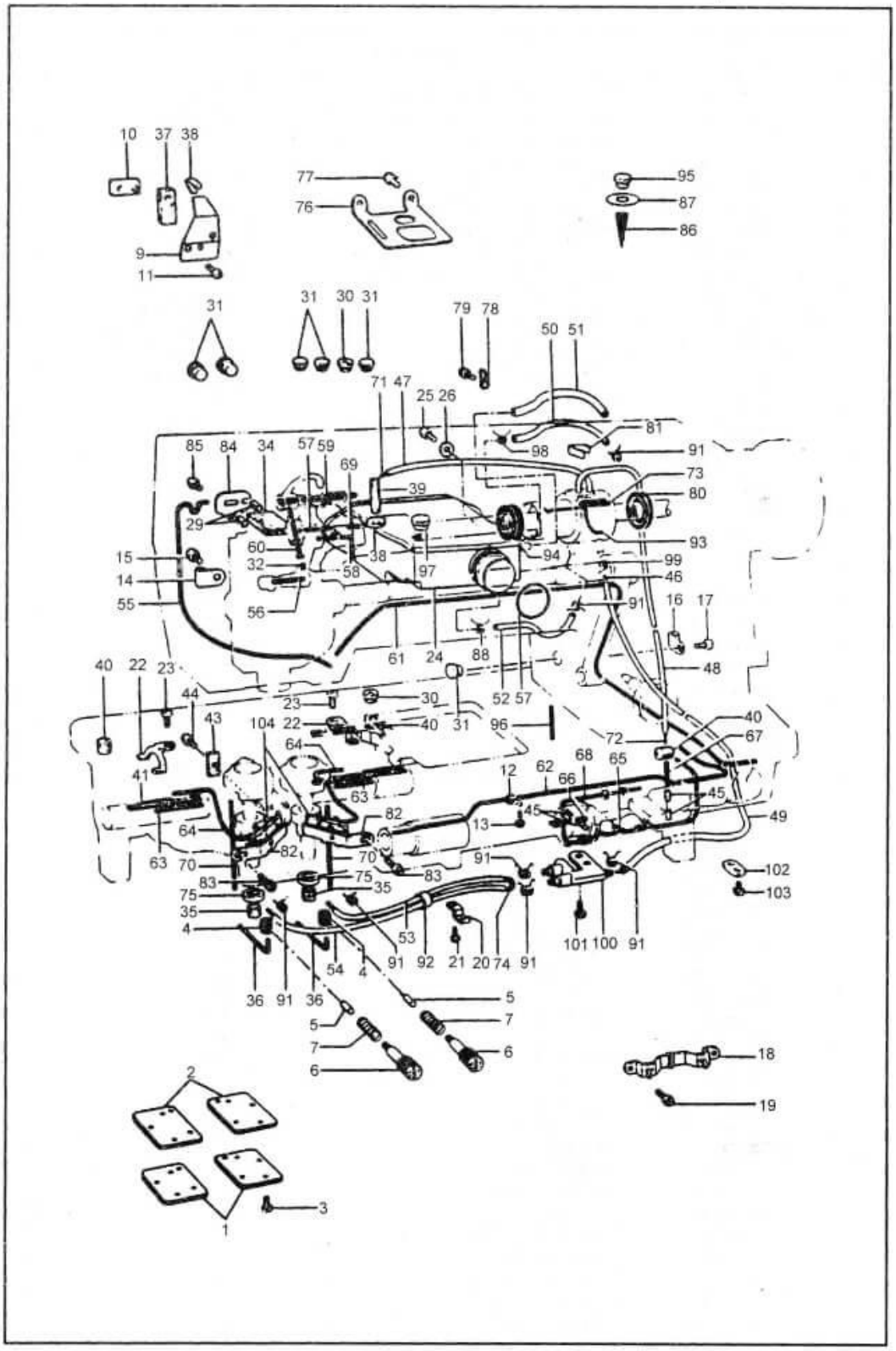
10 37 38
9
11
77
76
95
87
86
31
31 30 31
79 78
50 51
71 47
25 26
81
85 84 34 57 59 69
98
91
73
39
80
29
93
60
38
94
99
15
32
58
97
46
14
55
56
91
16 17
61 24 88
48
40 22 23
44
23
30
52 57
43
104 22
40 31
96
40
72
67
64
68 65
41
12 62 66
63
45
82
13
49
64
82
70
91
102
63 70
83
75
83
103
75
35
35
4
53
101 100 91
91 92 21 20 74 91
54 4
36 91 36
5
5
7
7
6
6
18
19
2
3
1

K. 润滑机构/Lubrication

序号 REF NO	件号 CODE	NAME OF PARTS	名 称	数量 QTY
65	108802001	WICK 4X4(25MM)	油线	1
66	S03289001	WICK 4X4(4MM)	油线	1
67	111191001	WICK (3.5MM)	油线	1
68	112750000	WICK (11MM)	油线	1
69	S07462000	WICK (2.5MM)	油线	1
70	S07463000	WICK (7MM)	油线	2
71	S34184000	WICK 4X4(30MM)	油线	1
73	S03289001	WICK 4X4(4MM)	油线	1
74	S07464100	WICK (53MM)	油线	1
75	156070002	SPACER	毛毡支座	2
76	S07466001	DUST PROTECTOR	防尘盖	1
77	062670512	SCREW 3.57X8	防尘盖螺钉	2
78	S07467001	TUBE HOLDER	油管支架	1
79	062680812	SCREW 4.37X8	油管支架螺钉	1
80	S07468000	OIL SEAL	油封	1
82	S21195001	WICK HOLDER	油线支架	2
83	062670512	SCREW 3.57X8	油线支架螺钉	2
86	S07473000	OIL FILTER	滤油网	1
87	S07481009	OIL SEAT	注油标贴	1
92	146253000	OIL TUBE	油管	1
93	S09369000	WICK(7CM)	油线	1
94	S09364000	OIL SEAL	油封	1
95	112758009	OIL CAP	油盖	1
96	111191001	WICK(3.5CM)	油线	1
97	104821009	OIL CAP	油盖	1
98	S027876001	TUBE CLAMP	油管夹头	2
99	S07876001	TUBE CLAMP	油管夹头	1
100	S14189100	TERMINAL	油管接头	1
101	062670612	SCREW 3.57X6	油管接头螺钉	2
103	062670612	SCREW 3.57X6	螺钉	1
< 842 >				
9	150988001	OIL STOPPER PLATE	挡油板	1
14	112719001	FELT HOLDER(U)	毛毡支架（	1
15	112720101	FELT HOLDER(D)	毛毡支架（上）	1
84	S07472001	INTERRUPT PLATE	护板 下）	1
85	062670512	SCREW 3.57X5	螺钉	2
88	S07469001	TUBE CLAMP	油管夹头	7
< 845 >				
16	112739001	WICK SUPPOPIT	油线支架	
17	062670512	SCREW 357X5	油线支架螺钉	

L . 过线压线机构 /Threading mechanism

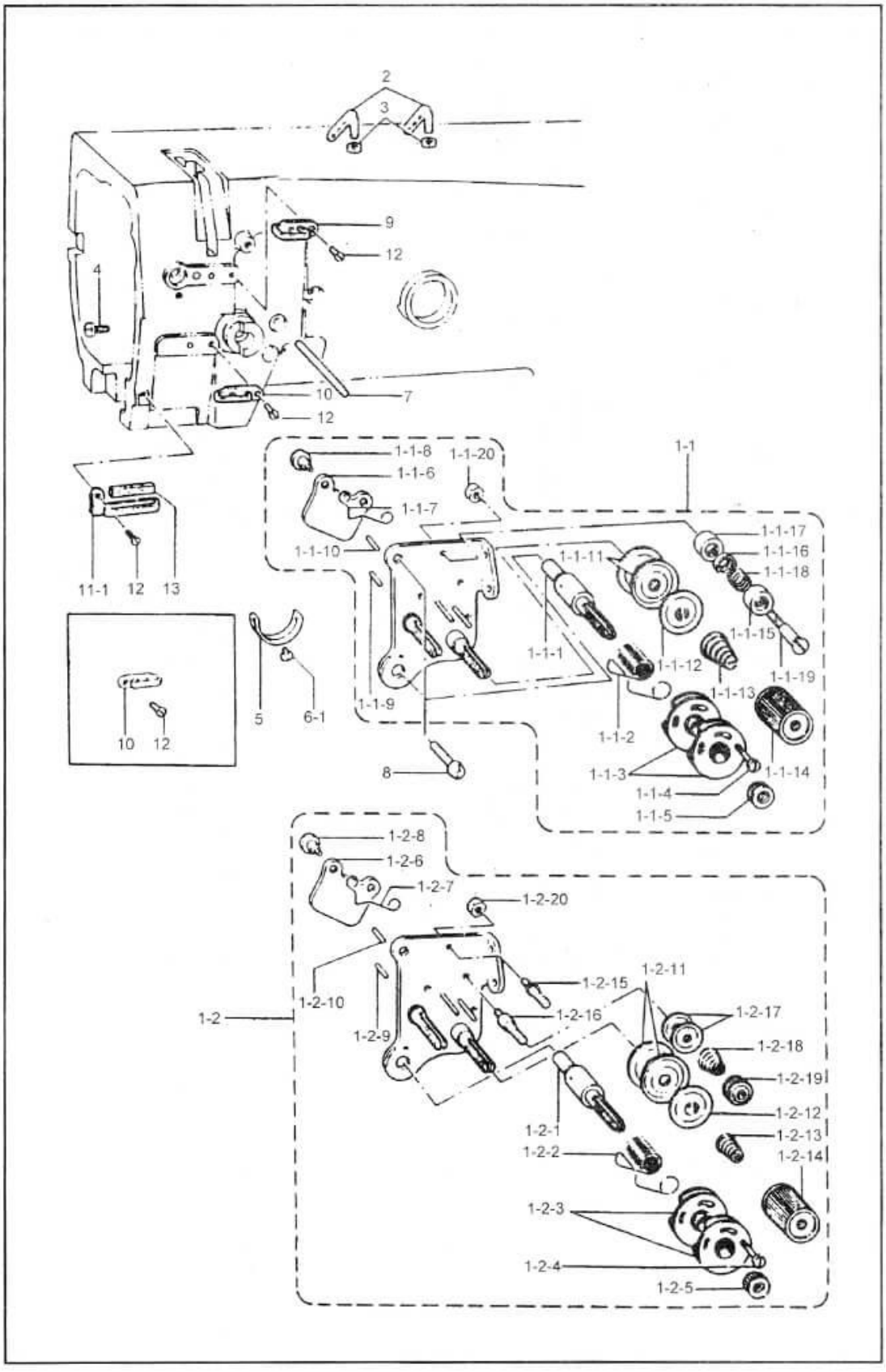

L .过线压线机构/Thread mechanism

序号 REF NO	件号 CODE	NAME OF PARTS	名　　称	数量 QTY
2	140527001	THREAD RETAINER	三眼线勾	2
3	150553003	NUT 5.95	三眼线勾螺母	2
4	100064002	SCREW 3.57	挑线簧螺栓紧固螺钉	1
5	112709007	STOPPER	挑线簧调整板	1
6-1	062670512	SCREW 3.57X5	挑线簧调整板螺钉	1
7	S07493001	TENSION RELTASE BAR	松线顶杆	1
8	062680812	SCREW 4.37X8	夹线器固定螺钉	1
9	108266001	ARM THREAD GUIDE(U)	上过线勾	1
12	108960002	SCREW 3.57	线勾螺钉	3
1-1-1	144680001	TENSION STUD	挑线簧螺栓	1
1-1-2	155491001	THREAD TAKE-UP SPRING	挑线簧	1
1-1-3	108254001	SPRING GUIDE ASSEMBLY	挑线导线器组件	2
1-1-4	144682001	SCREW 2.38	螺钉	1
1-1-5	108265009	TENSION NUT	夹线螺母	1
1-1-6	S07487001	TENSION RELEASE PLATE	松线板	1
1-1-7	118320001	TENSION RELEASE SPRING	松线板簧	1
1-1-8	112712001	STUD SCREW 3.57	松线板螺钉	2
1-1-9	158769001	TENSION RELEASE PIN(R)	松线针（L）	1
1-1-10	S07488001	TENSION RELEASE PIN(L)	松线针（R）	1
1-1-11	145446001	TENSION DISC	夹线板	4
1-1-12	159805001	TENSION DISE PRESSER	夹线压板	2
<-3>				
1-1-13	144105000	TENSION SPRING	夹线簧	2
<-5>				
1-1-13	144105000	TENSION SPRING	夹线簧	2
1-1-14	14956609	TENSION NUT	夹线螺母	2
1-1-20	021670102	NUT 3.57	螺母	2
<标准用/STANDARD>				
1-1	★	NEEDLE THREAD TENSION ASSEMBLY	夹线器组件	1
1-1-15	144685001	THREAD GUIDE CAP	夹线螺母	2
1-1-16	144686001	THREAD GUIDE DISC	夹线片	2
1-1-17	144687001	THREAD GUIDE BRACKET	夹线压板	2
1-1-18	144688001	THREAD GUIDE SPRING	夹线簧	2
1-1-19	144689001	THREAD GUIDE STUD SCREW	夹线螺钉	2
10	112658001	ARM GHREAD GUIDE(M)	大线勾	1
11-1	112715001	ARM THREAD GUIDE(D)	导线夹	1
13	114941001	FELT	毛毡	1
<自动切线/STANDARD TRIMMER>				
1-2	★	NEEDLE THREAD TENSION ASSEMBLY	夹线器组件	1
1-2-15	158771001	THREAD GUIDE SHAFT(L)	夹线螺钉（左）	1
1-2-16	158771001	THREAD GUIDE SHAFT(R)	夹线螺钉（右）	1
1-2-17	144504001	THREAD GUIDE DISC	夹线片	4
1-2-18	15460001	PRE-TENSION SPRING(A)	夹线簧	2
1-2-19	155510001	TENSION NUT	夹线螺母	2
10	112658001	ARM THREAD GUIDE(M)	导线夹	2

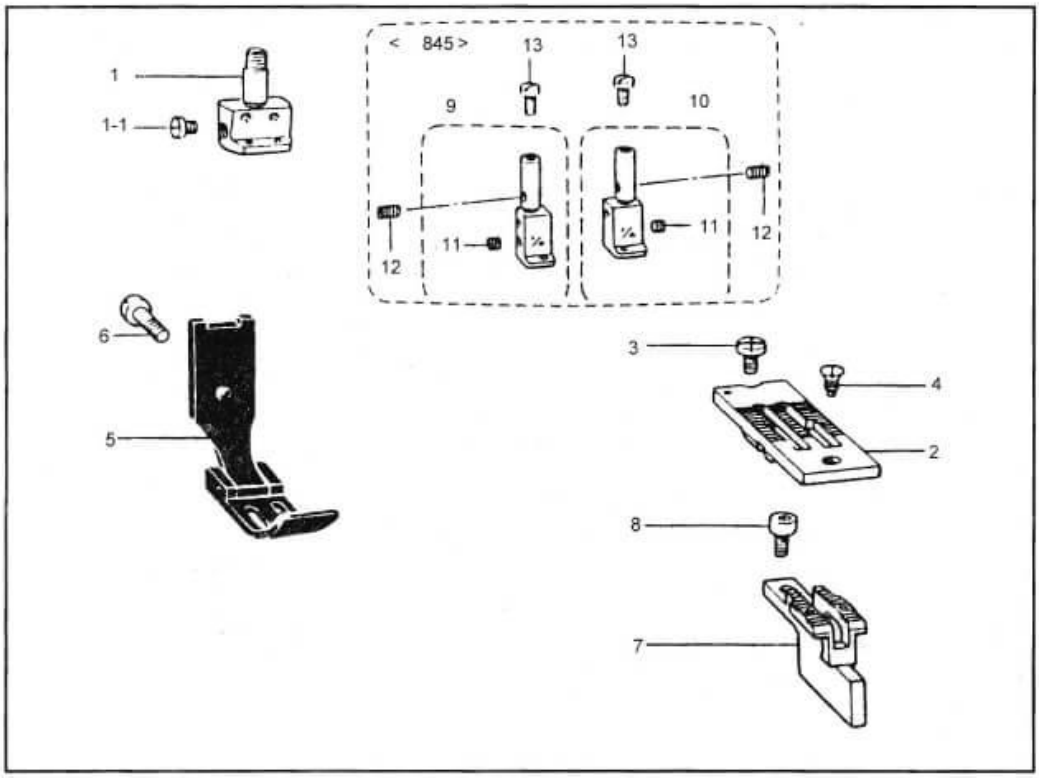

G.针组零件/Gauge parts

序号 REF NO	件号 CODE	NAME OF PARTS	名 称	数量 QTY
1-1	★	SCREW 3.57	螺钉	2
2	★	NEEDLE PLATE ASSEMBLY	针板	1
3	S11244001	SCREW 4.37	螺钉	1
4	100032004	SCREW 4.37	螺钉	1
5	★	PREESES FOOT ASSEMBLY	压脚	1
6	113050001	SCREW 3.57	螺钉	1
7	★	FEED DOG	送布牙	1
8	S07494001	SCREW 3.18	螺钉	2
< 842 >				
1	★	NEEDLE CLAMP ASSEMBLY	针夹	1
< 845 >				
9	★	NEEDLE CLAMP ASSEMBLY	针夹（左）	1
10	★	NEEDLE CLAMP ASSEMBLY	针夹（右）	1
11	013660412	SCREW 3.18X4	螺钉	2
12	S13085001	SCREW 3.18	螺钉	2
13	149831101	SCREW 3.18	螺钉	2

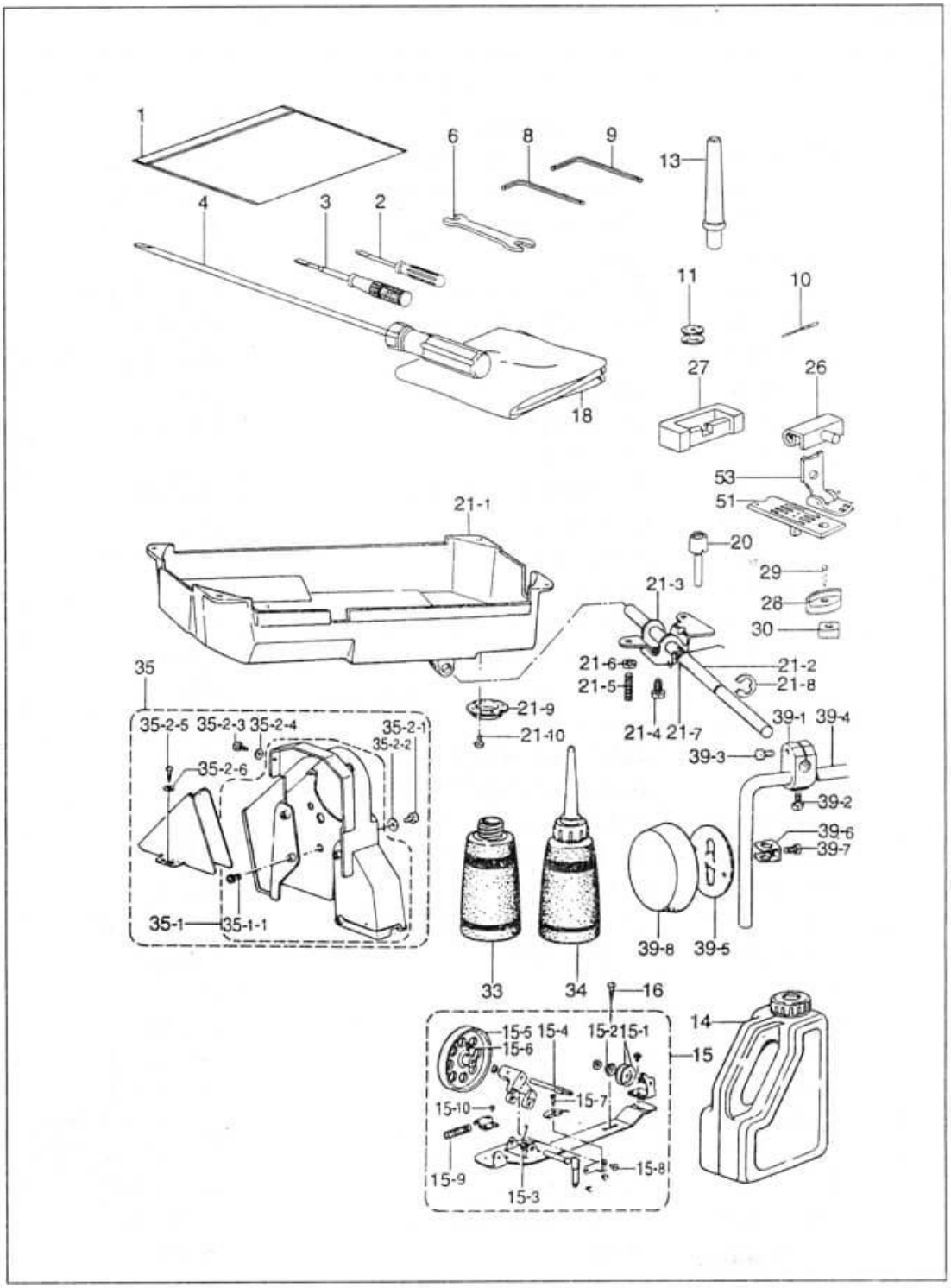
1
6
8
9
13
4
3
2
11
10
18
27
26
53
51
21-1
20
29
21-3
28
30
21-6
21-2
21-5
21-8
21-4
21-7
21-9
21-10
35
35-2-5
35-2-3
35-2-4
35-2-1
35-2-2
35-2-6
35-1
35-1-1
39-1
39-4
39-3
39-2
39-6
39-7
39-8
39-5
33
34
16
15-5
15-4
15-2
15-1
15-6
15-7
15-10
15-9
15-3
15-8
14
15

Z1.附属部份/Accessories

序号 REF NO	件号 CODE	NAME OF PARTS	名　　称	数量 QTY
1	122991001	ACCESSORY BAG	附件袋	
2	142443001	SCREW DRIVER, 1.9X52	螺丝刀（大）	
3	118837001	SCREW DRIVER, 3.4X70	螺丝刀（中）	
4	S17774001	SCREW DRIVER, 4.7X250	螺丝刀（小）	
6	100887001	SPANNER	双头扳手	
8	142002001	HEXAGONAL WRENCH 2	六角扳手（小）	
9	142721001	HEXAGONAL WRENCH3	六角扳手（大）	
10	107415011	NEEDLE DPX5 (#14)	机针DPX5(＃14)	
11	112781101	BOBBIN, ST	梭芯	
13	100477009	HEAD REST	机头支柱	
14	154702101	OIL TANK	油壶	
15	117963110	BOBBIN WINDER ASSY	绕线器组件	
15-1	145446003	TENSION DISC	过线夹线板	
15-2	100401001	TENSION SPRING	过线夹线簧	
15-3	117969001	SPRING	弹簧	
15-4	117970001	BOBBIN WINDER SHAFT	绕线轴	
15-5	S18634001	BOBBIN WINDER	绕线轮	
15-6	100366002	SET SCREW, (FT)SM4/37X5	螺钉	
15-7	100657001	SCREW, SM3.18	螺钉	
15-8	100659001	SHOULDER SCREW WHEEL STOPPER	螺钉	
15-9	100662001	BOBBIN WINDER WHEEL STOPPER	止动橡皮	
15-10	S39086001	SCREW, PAN SM3.57-40X3.5	螺钉	
16	100666002	WOOD SCREW, ROUND M5.5X20	木制螺钉	
18	144222001	HEAD COVER	机头罩	
20	145573000	KNEE LIFER COMPLYING BAR	膝控提升顶杆	
21	S38297001	OIL PAN ASSY	油盘组件	
21-1	S38273000	OIL PAN	油盘	
21-2	S38276001	OIL PAN KNEE LIFTER SHAFT	膝控铰链轴	
21-3	146037001	KNEE LIFTER	膝控限位架	
21-4	146367001	BOLT, SM5.95	膝控限位架螺钉	
21-5	104885101	SET SCREW, SM5.95	膝控限位调节螺钉	
21-6	100022004	NUT, SM5.95	膝控限位调节螺母	
21-7	S15889001	TWIST SPRING	膝控复位簧	
21-8	146293001	RETAININGG RING, E10	开口挡圈	
21-9	153230101	DRAIN	排油圈	
21-10	062670512	SCREW, PAN SM5.57-40X5	排油圈螺钉	

Z1.附属部份/Accessories

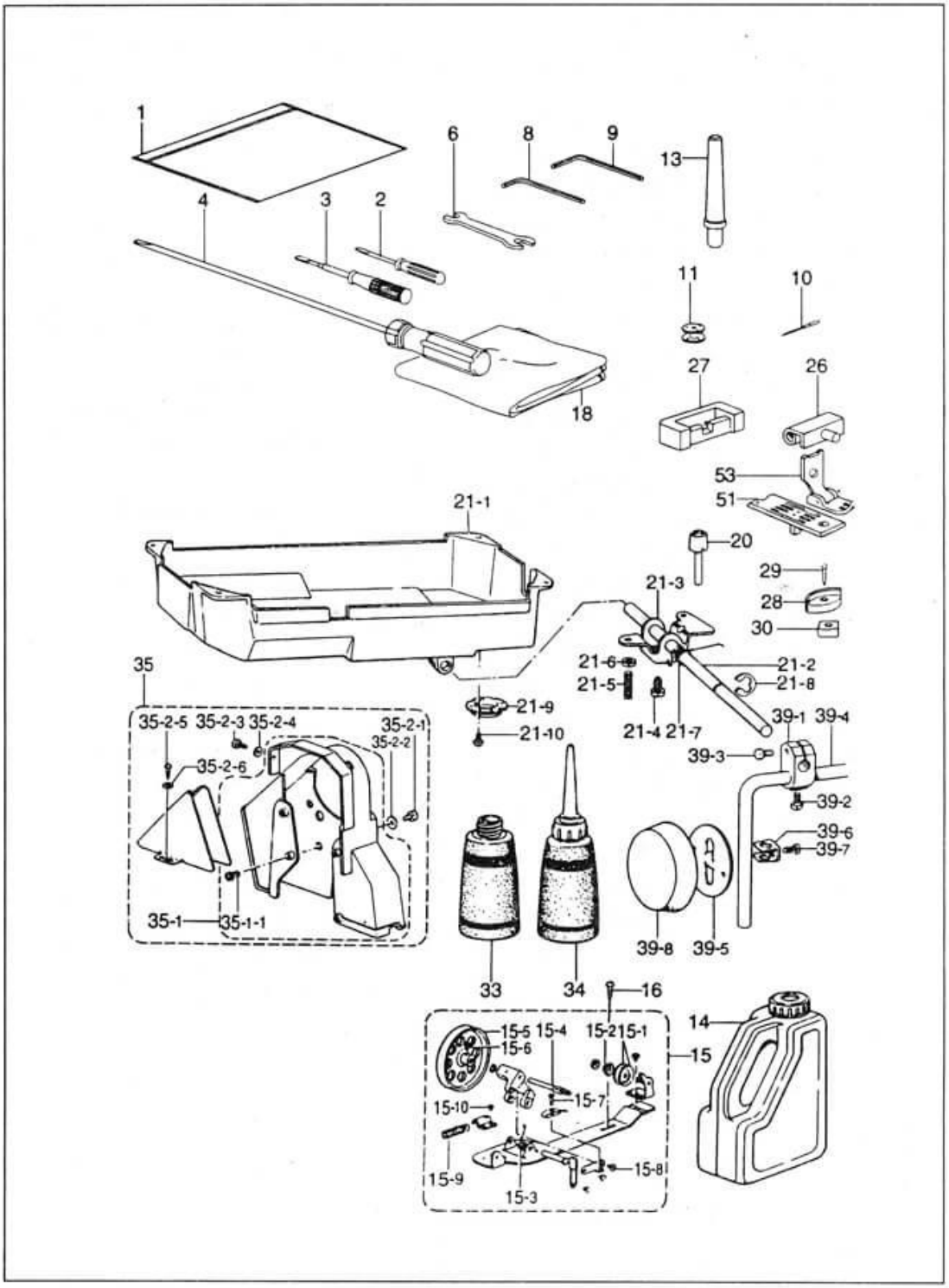

Z1.附件部份/Accessories

序号 REF NO	件号 CODE	NAME OF PARTS	名　　称	数量 QTY
26	143882001	HEND HINGE	机头勾座	2
27	143910009	RUBBER CUSHION	橡皮垫	2
28	148890109	HEAD CUSHION	机头防震垫片	4
29	109714000	NAIL	钉子	8
30	S07561009	OIL PAN CUSHIN	机头防震钉块	1
33	114486002	OILER	小油壶	1
34	114483002	OILER ASSY	油壶	1
35	183480009	BELT COVER ASSY	上皮带防护罩组件	1
35-1	S08468009	BELT COVER COLLAR ASSY	上皮带防护罩	4
35-1-1	S07660000	RUBBER COLLAR	上皮带防护罩橡皮胶圈	4
35-2-1	062712012	SCREW, PAN SM4.76-32 X 20	上皮带防护罩固定螺钉	4
35-2-1	025050332	WASHER, PALIN L5	螺钉垫圈	1
35-2-3	062680812	SCREWPAN SM4.37-40 X 8	上皮带防护罩固定螺钉	1
35-2-4	025680232	WASHER, PLAN M4.37	螺钉垫圈	2
35-2-5	100666002	WOOD SCREW , ROUND M5.5 X 20	下皮带防护罩木螺钉	2
35-2-6	025750132	WASGER, PLAIN S5.56	木螺钉垫圈	1
39	181427001	KNEE LIFTER ASSY	膝控碰块配件	1
39-1	146039001	KNEE LIFTER JOINT	碰块弯杆接头	1
39-2	100463001	BOLT, SM7.94	弯杆接头支头螺钉	1
39-3	017762013	BOLT, SM5.95 X 20	弯杆接头锁紧螺钉	1
39-4	104619002	KNEE LIFTER BAR	膝控碰块弯杆	1
39-5	114966001	KNEE LIFTER PLATE	膝控碰块	1
39-6	114967001	KNEE LIFTER PLATE STOPPER	碰块架	1
39-7	110087001	BOLT,SM5.95	碰块垫螺栓	1
39-8	140503001	KNEE LIFTER PLATE COVER	碰块垫	1
		OPTION PARTS	备用零件	
37		HEIGHT GAUGE, PORTRY HOOK B831	----------	1
38		GAUGE, NEEDLE&PRESSER BAR	----------	1

旋梭厂牌及规格对照表

★	23-1	★	23-2
			
842	(Koban)KRT12-5M	845	(Koban)KRT12-5LM
	(Hirose)HSH-12-15L		(Hirose)HSH-12-15MM
842-	(Koban)KRT12-5BFC1	845-	(Koban)KRT12-5LMKC1
(-3)(-5)80	(Hirose)HSH-12-15L(TR1)	(-3)(-5)80	(Hirose)HSH-12-15MM(3)TR
842	(Koban)SKRT12-5MK	845	(Koban)SKRT12-5LMK
	(Hirose)HSH-12-15LC+CP-12C		(Hirose)HSH-12MC+CP-12MC
842	(Koban)SKRT12-5BFKC	845	(Koban)SKRT12-5LMKC1
(-3)(-5)80	(Hirose)HSH-12-15LTR1+CP-12CTR1	(-3)(-5)80	(Hirose)HSH-12MC(3)+CP-12MC(3)

针距组件对照表/GAUGE PARTS LIST
842(标准用) /FOR 842(Standard)

针距 Needle Gauge	分级 Subclass	X-1 针夹 Needle Clamp Assemly	X-2 针板 Needle Plate	X-7 送布牙 Feed Dog	X-5 压脚 Presser Foot Assembly	A13-1 左滑板 Slide Plate (L)Assembly
3/32"(2.4mm)	-3	42100332-00	42200332-00	42300332-01	4240332-00	42A013-0101
	-5			42300332-02		
1/8"(3.2mm)	-3	42100108-00	42200108-00	42300108-01	42400108-00	
	-5			42300108-02		
5/32"(4.0mm)	-3	42100532-00	42200532-00	42300532-01	42400532-00	
	-5			42300532-02		
3/16(4.8mm)	-3	42100316-00	42200316-00	42300316-01	42400316-00	
	-5			42300316-02		
1/4"(6.4mm)	-3	42100104-00	42200104-00	42300104-01	42400104-00	
	-5			42300104-02		
	-7			★42300104-03		
5/16"(7.9mm)	-3	42100516-00	42200516-00	42300516-01	42400516-00	
	-5			42300516-02		
3/8"(9.5mm)	-3	42100308-00	42200308-00	42300308-01	42400308-00	
	-5			42300308-02		
1/2"(12.7mm)	-3	42100102-00	42200102-00	42300102-01	42400102-00	
	-5			42300102-02		
5/8(15.9mm)	-3	42100508-00	42200508-00	42300508-01	42400508-00	
	-5			42300508-02		
1"(25.4mm)	-3	42110000-00	42210000-00	42310000-01	42410000-00	
	-5			42310000-02		
11/4"(31.8mm)	-3	42110104-00	42210104-00	42310104-01	42410104-00	42A013-0102
	-5			42310104-02		
13/8"(34.9mm)	-3	42110308-00	42210308-00	42310308-01	42410308-00	
	-5			42310308-02		
11/2(38.1mm)	-3	42110102-00	4221012-00	42310102-01	42410102-00	
	-5			42310102-02		
※2"(50.8mm)	-3	42120000-00	42220000-00	42320000-01	42420000-00	42A013-0103
	-5			42320000-02		

◎印有★符号的为厚料用。其针孔尺寸如右图所示。

◎Needle hole dimensions for heavy materials(indicated by a ★) are shown in figure at the right

◎印有此※符号之针距仅供LJ842使用

◎This mark ※ For 842 use only

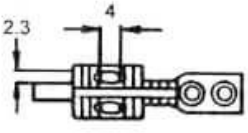

842 (切线用) /For 842 (Thread Trimmer)

针距 Needle Gauge	分级 Subclass	X-1 针夹 Needle Clamp Assemly	X-2 针板 Needle Plate	X-7 送布牙 Feed Dog	X-5 压脚 Presser Foot Assembly	A13-1 左滑板 Slide Plate (L)Assembly	R-14 扫线杆 Thread wiper
					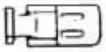		
1/8″(3.2mm)	-3	42100108-00	42200108-10	42300108-11	42400108-00		
	-5			42300108-12			
5/32″(4.0mm)	-3	42100532-00	42200532-10	42300532-11	42400532-00		
	-5			42300532-12			
3/16″(4.8mm)	-3	42100316-00	42200316-10	42300316-11	42400316-00		
	-5			42300316-12			
1/4″(6.4mm)	-3	42100104-00	42200104-10	42300104-11	42400104-00		42TR014-0000
	-5			42300104-12			
	-7			★42300104-13			
5/16″(7.9mm)	-3	42100516-00	42200516-10	42300516-11	42400516-00	42A013-0101	
	-5			42300516-12			
3/8″(9.5mm)	-3	42100308-00	42200308-10	42300308-11	42400308-00		
	-5			42300308-12			
1/2″(12.7mm)	-3	42100102-00	42200102-10	42300102-11	42400102-00		
	-5			42300102-12			
5/8″(15.9mm)	-3	42100508-00	42200508-10	42300508-11	42400508-00		
	-5			42300508-12			
1″(25.4mm)	-3	42110000-00	42210000-10	42310000-11	42410000-00		
	-5			42310000-12			
11/4″(31.8mm)	-3	42110104-00	42210104-10	42310104-11	42410104-00	42A013-0102	42TR014-0100
	-5			42310104-12			
11/2″(38.1mm)	-3	42110102-00	42210102-10	42310102-11	42410102-00		
	-5			42310102-12			

◎印有★符号的为极厚料用。其针孔尺寸如右图所示。

◎Needle hole dimensions for heavy materials(indicated by a ★) are shown in figure at the right

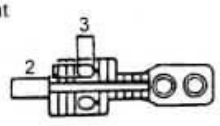

845(标准用) / 845 (Standard)

针距 Needle Gauge	分级 Subclass	X-9,10 针夹 Needle Clamp Assemly 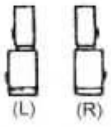 (L) (R)	X-2 针板 Needle Plate 	X-7 送布牙 Feed Dog 	X-5 压脚 Presser Foot Assembly 
1/8"(3.2mm)	-3	(L)45100108-00	42200108-00	42300108-01	42400108-00
	-5	(R)45100108-00		42300108-02	
5/32"(4.0mm)	-3	(L)45100532-00	42200532-00	42300532-01	42400532-00
	-5	(R)45100532-00		42300532-02	
3/16"(4.8mm)	-3	(L)45100316-00	42200316-00	42300316-01	42400316-00
	-5	(R)45100316-00		42300316-02	
1/4"(6.4mm)	-3	(L)45100104-00	42200104-00	42300104-01	42400104-00
	-5	(R)45100104-00		42300104-02	
	-7			★42300104-02	
5/16"(7.9mm)	-3	(L)45100516-00	42200516-00	42300516-01	42400516-00
	-5	(R)45100516-00		42300516-02	
3/8"(9.5mm)	-3	(L)45100308-00	42200308-00	42300308-01	42400308-00
	-5	(R)45100308-00		42300308-02	
7/16"(11.1mm)	-3	(L)45100716-00	42200716-00	42300716-01	42400716-00
	-5	(R)45100716-00		42300716-02	
1/2"(12.7mm)	-3	(L)45100102-00	42200102-00	42300102-01	42400102-00
	-5	(R)45100102-00		42300102-02	
5/8(15.9mm)	-3	(L)45100508-00	42200508-00	42300508-01	42400508-00
	-5	(R)45100508-00		42300508-02	

◎印有★符号的为极厚料用。其针孔尺寸如右图所示。

◎Needle hole dimensions for heavy materials(indicated by a ★) are shown in figure at the right

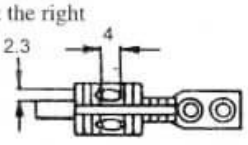

845（切线用）/ For 845 (Thread Trimmer)

针距 Needle Gauge	分级 Subclass	X-9,10 针夹 Needle Clamp Assemly	X-2 针板 Needle Plate	X-7 送布牙 Feed Dog	X-5 压脚 Presser Foot Assembly
		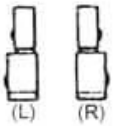			
1/8″(3.2mm)	-3	(L)45100108-00	42200108-10	42300108-11	42400108-00
	-5	(R)45100108-00		42300108-12	
5/32″(4.0mm)	-3	(L)45100532-00	42200532-10	42300532-11	42400532-00
	-5	(R)45100532-00		42300532-12	
3/16″(4.8mm)	-3	(L)45100316-00	42200316-10	42300316-11	42400316-00
	-5	(R)45100316-00		42300316-12	
7/32″(5.6mm)	-3	(L)45100732-00	42200732-10	42300732-11	42400732-00
		(R)45100732-00		42300732-12	
1/4″(6.4mm)	-3	(L)45100104-00	42200104-10	42300104-11	42400104-00
	-5	(R)45100104-00		42300104-12	
	-7			★42300104-14	
9/32″(7.1mm)	-3	(L)45100932-00	42200932-10	42300932-11	42400932-00
		(R)45100932-00		42300932-12	
5/16″(7.9mm)	-3	(L)45100516-00	42200516-10	42300516-11	42400516-00
	-5	(R)45100516-00		42300516-12	
3/8″(9.5mm)	-3	(L)45100308-00	42200308-10	42300308-11	42400308-00
	-5	(R)45100308-00		42300308-12	
7/16″(11.1mm)	-3	(L)45100716-00	42200716-10	42300716-11	42400716-00
	-5	(R)45100716-00		42300716-12	
1/2″(12.7mm)	-3	(L)45100102-00	42200102-10	42300102-11	42400102-00
	-5	(R)45100102-00		42300102-12	
5/8″(15.9mm)	-3	(L)45100508-00	42200508-10	42300508-11	42400508-00
	-5	(R)45100508-00		42300508-12	

◎印有★符号的为极厚料用。其针孔尺寸如右图所示。

◎Needle hole dimensions for heavy materials(indicated by a ★) are shown in figure at the right

