NISEN 尼森

SF737/747/757
系 列 SERIES

使 用 说 明 书
Operation Manual

超高速包缝机

SUPER HIGH SPEED OVERLOCK SEWING MACHINE

一、机壳部分 / Frame assemblies

序号 Ref.No	零件编号 Part No.	名称 Name		数量 Amt. Req.		
				3线	4线	5线
1	M1-1A	机壳	machine frame	1	1	1
2	M1-2	针线罩壳护板	needle thread cover plate	1	1	1
3	M1-3A	上节罩	upper oncde cover	1	1	1
4	M1-4A	上节罩垫	upper oncde cover pad	1	1	1
5	M1-5A	车壳上节	lather shell upper knot	1	1	1
6	M1-6	针杆座	needle plate	1	1	1
7	M1-7	上节垫片	upper washer	1	1	1
8	M1-8	油管	oil tube	1	1	1
9	M1-9	回油胶套	rear oil adhesive case	1	1	1
10	M1-10	油封	oil seal	1	1	1
11	M1-11	后盖板	rear cover	1	1	1
12	M1-12	后盖板油封	rear cover oil seal	1	1	1
13	M1-13	油封	oil seal	1	1	1
14	M1-14	盖板	cover	1	1	1
15	M1-15	油封垫	oil sear washer	1	1	1
16	M1-16	盖板垫	cover washer	1	1	1
17	M1-17	铆钉	rivet	4	4	4
18	M1-18A	机型牌	machine modle plate	1	1	1
19	M1-19	塑料管	model tube	1	1	1
20	M1-20	圆柱销	pin	2	2	2
21	M1-21	滤油网	oil screen	1	1	1
22	M1-22	卡簧	snap ring	1	1	1
23	M1-23	油封1	oil seal I	1	1	1
24	M1-24	油封11	oil seal II	1	1	1
25	M1-25	开口销	begin pin	4	4	4
26	M1-26	商标牌	trade mark plste	1	1	1
27	M1-28	标牌	mard plate	1	1	1
28	M1-29	油量调节销	oil amount adjusting pin	1	1	1
1	S064	车壳连接螺钉	screw	4	4	4
2	S065	左罩螺钉	screw	3	3	3
3	S054	针杆座螺钉	needle bar asm screw	2	2	2
4	S061	针杆座紧固螺钉	needle lind set screw	1	1	1
5	S009	针杆罩壳护板顶丝	needle thread cover plate top silk	1	1	1
6	S071	针杆罩壳护板紧固螺钉	needle thread cover plate set screw	1	1	1
7	S041	大盖轴调节螺钉	main cover bearing regulate screw	1	1	1
8	N03	大盖轴调节螺母	main cover bearing regulate nut	1	1	1
9	S032	后盖板螺钉	rear cover plate	11	11	11
10	S036	盖板螺钉	lower cover plate	2	2	2
11	S081	油盘连接螺钉	oil pan join screw	4	4	4
12	W14	油盘连接垫圈	washer	4	4	4
13	W03	油盘连接弹性垫圈	elasticity washer	4	4	4
14	S080	油盘连接内六角螺钉	nexagon socker screw	4	4	4
15	S044	螺钉	screw	1	1	1
16	S065	螺钉	screw	1	1	1

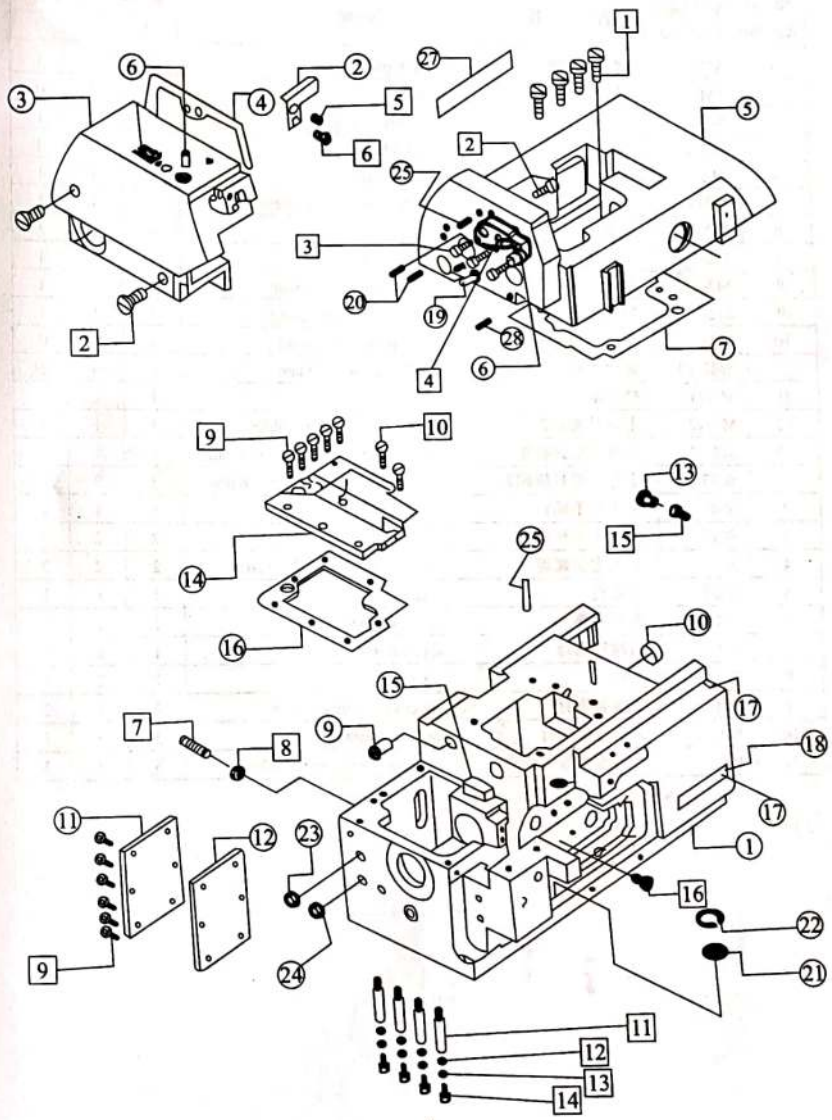

扫描全能王 创建

二、缝台部分 / Cloth plate assemblies

序号 Ref.No	零件编号 Part No.	名称 Name		数量 Amt. Req. 3	4	5
1	M2-1	缝台盖组件	cloth plate	1	1	1
	5M2-1	缝台盖组件	cloth plate	0	0	0
2	M2-2	垫圈	washer	1	1	1
3	M2-3	胶套	colloid cose	4	4	4
4	M2-4	胶套	colloid cose	1	1	1
5	M2-5	缝台盖防震螺钉	choth plate spring screw	1	1	1
6	M2-6	弹簧	spring	1	1	1
7	M2-7	缝台盖开启弹簧	cloth plate spring	1	1	1
8	M2-8	缝台盖扳手	cloth plate slider cover	1	1	1
9	M2-9	缝合盖簧	cloth plate cover spring	1	1	1
10	M2-10	缝台下罩壳	cloth plate lower plate	1	1	0
	5M2-10	缝台下罩壳	cloth plate lower plate	0	0	1
11	M2-11	挡油罩	washer	1	1	1
12	M2-12	上弯针密封板	upper looper sealing plate	1	1	1
13	M2-13	上弯针密封板垫	upper looper sealing plate washer	1	1	1
1	S037	上弯针密封板螺钉	upper looper sealing plate screw	3	3	3
2	S049	大盖扳手螺钉	set screw	1	1	1
3	S010	凸轮上罩螺钉	screw	2	2	2
4	N03	大盖定位螺母	set nut big cover stable screw	2	2	2
5	S083	台螺钉	screw	1	1	1
6	W11	台螺钉垫	screw washer	1	1	1
7	N01	台螺钉螺母	screw nut	1	1	1
8	W08	垫圈	washer	2	2	2
9	S012	大盖簧螺钉	big cover spring vscrew	2	2	2
10	S099	大盖连接螺钉	big cover join screw	3	3	3
11	W07	大盖连接螺钉垫圈	big cover join screw washer	3	3	3

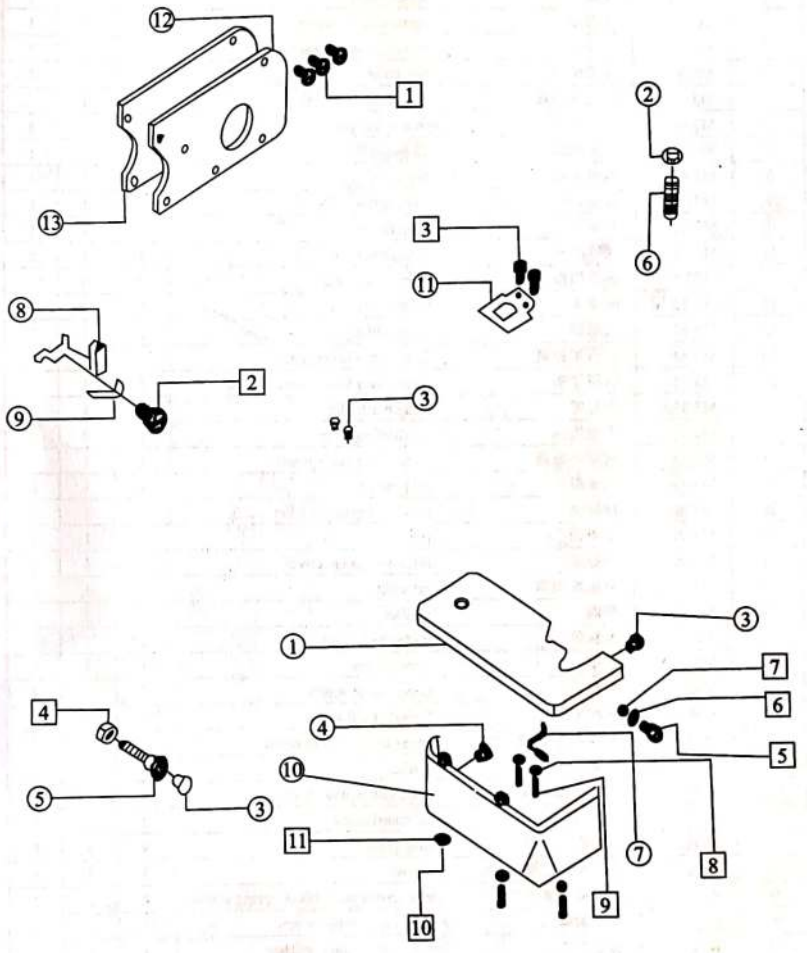

扫描全能王 创建

三、罩壳部分 / Cover assemblies

序号 Ref.No	零件编号 Part No.	名称 Name		数量 Amt. Req. 3	4	5
1	M3-12	上盖	upper cover	1	1	1
2	M3-2	上盖垫	upper cover washer	1	1	1
3	M3-3	过线架	thread guide supporter	1	1	1
4	M3-4A	皮带轮罩	belt cover	1	1	1
5	M3-5	机线罩壳簧	thread cover spring	1	1	1
6	M3-6	缝料挡板	cloth gude plate	1	1	1
7	M3-7	挡油板11	oil guide II	1	1	1
8	M3-8	前罩架销	pin	1	1	1
9	M3-9	前罩簧片	front spring	1	1	1
10	M3-10	前罩	front cover	1	1	1
11	M3-11	前罩挡板	front cover guard	1	1	0
	5M3-11	前罩挡板	front cover guard	0	0	1
12	M3-12	前罩架	front cover hinge	1	1	1
13	M3-13	前罩销	hinge pin	1	1	1
14	M3-14	前罩架弹簧	front cover hinge spring	1	1	1
15	M3-15	前罩架垫	front cover hinge washer	1	1	1
16	M3-16A	商标牌	trade mark plate	1	1	1
17	M3-17	进油指示	oil flow window	2	2	2
18	M3-18	前罩挡板簧	front cover snap guard	1	1	1
19	M3-19	挡油板1	oil guard I	1	1	1
20	M3-20	油标垫	oil idverl gauge washer	1	1	1
21	M3-21	上罩销	pin	1	1	1
22	M3-22A	油标盖	oil cover gauge cover	1	1	1
23	M3-23A	有机玻璃罩	oil sight	1	1	1
24	M3-24	垫圈	washer	1	1	1
25	M3-25	商标牌	trade mark plate	1	1	1
26	M3-26A	上罩	upper cover	1	1	1
1	S098	上盖螺钉	upper cover screw	4	4	4
2	S091	过线架螺钉	thread guard screw	2	2	2
3	S017	上罩簧片螺钉	upper cover spring screw	3	3	3
4	W17	垫圈	wather	2	2	2
5	S032	缝料挡板螺钉	cloth guide plate screw	5	5	5
6	S020	挡油板螺1	oil guard screw I	2	2	2
7	S090	挡板螺钉	snap plate	4	4	4
8	S082	铰链销固定螺钉	screw	3	3	3
9	S027	铰链板卡簧螺钉	front cover plate blkck spring screw	2	2	2
10	S024	前罩架螺钉	front cover hinge screw	3	3	3
11	W11	前罩架垫	front cover hinge washer	3	3	3
12	E02	卡簧	snap uing	1	1	1

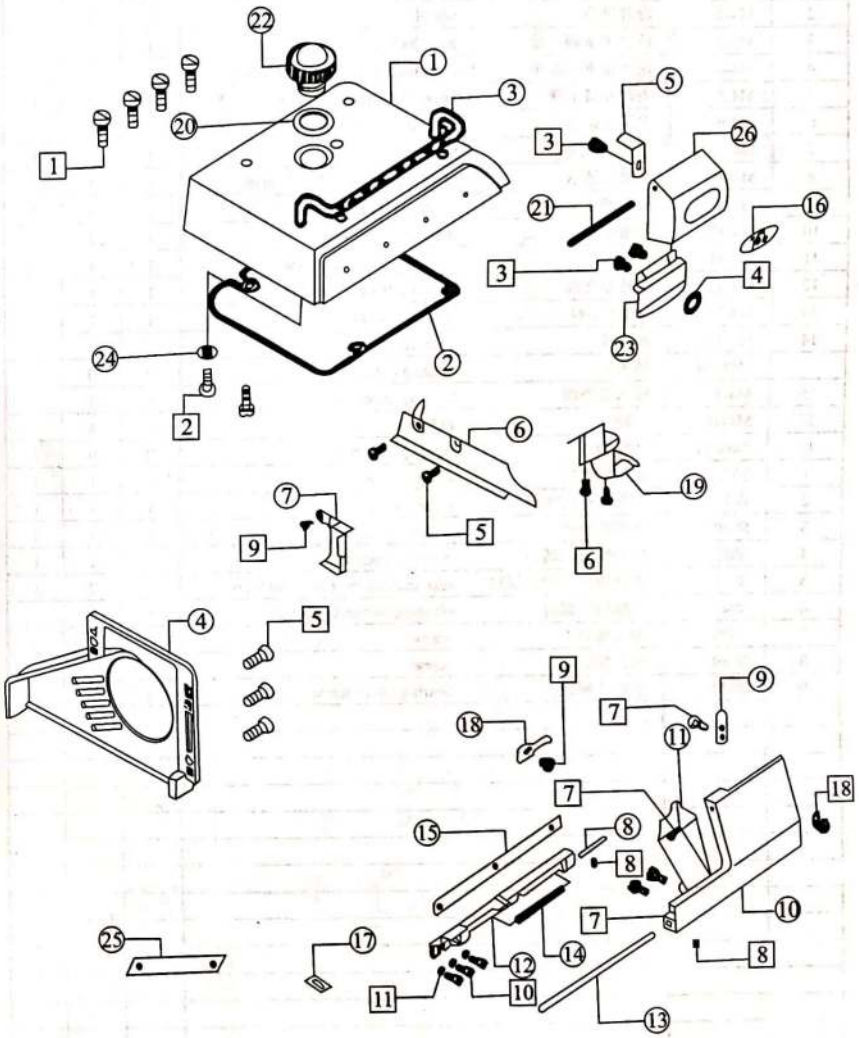

扫描全能王 创建

四、主轴部分 / Main shaft assemblies

序号 Ref.No	零件编号 Part No.	名称 Name		数量 Amt. Req. 3	4	5
1	M4-1	主轴	main shaft	1	1	1
2	M4-2	冷却风扇	wheel	1	1	1
3	M4-3	滚针轴承制动盖	rear shaft bearing cover	1	1	1
4	M4-4	滚针轴承制动垫	rear shaft bearing cover washer	1	1	1
5	M4-5	主轴弹簧垫圈	main shaft spring washer	1	1	1
6	M4-6	主轴中轴套	main shaft bysgubg asm	1	1	1
7	M4-7	主轴[密封圈	Seal ring	1	1	1
8	M4-8	主轴后轴承	main shaft queen shaft bearing	1	1	1
9	M4-9	油泵螺杆	oil pump worm	1	1	1
10	M4-10	主轴轴承	main shaft bearing	1	1	1
11	M4-11	卡簧	shaft end bushing washer	1	1	1
12	M4-12	主轴左套筒	main shaft light bushing	1	1	1
13	M4-13	轴承80200	bearing 80200	1	1	0
14	M4-14	轴承盖	bearing cover	0	0	1
	5M4-14	轴承盖	bearing cover	1	1	1
15	M4-15	轴承盖垫圈	bearing cover washer	1	1	1
16	M4-16	上轮	pulley	0	0	1
17	5M4-17	凸轮轴	bulgy pulley bearing	1	1	1
1	S073	皮带轮螺钉	pulley screw	1	1	1
2	W03	皮带轮螺钉垫圈	pulley screw washer	1	1	1
3	S070	皮带轮顶丝	pulley set screw	1	1	1
4	S085	皮带轮定位螺钉	pulley set screw	3	3	3
5	S032	滚针轴承止动盖螺钉	rear shafting bearint cover srew	1	1	1
6	S043	油泵蜗杆螺钉	oil pump worm screw	2	2	2
7	S078	油瓦螺钉	screw	1	1	1
8	S019	油孔螺钉	screw	3	3	3
9	S022	轴承盖螺钉	bearing cover screw			

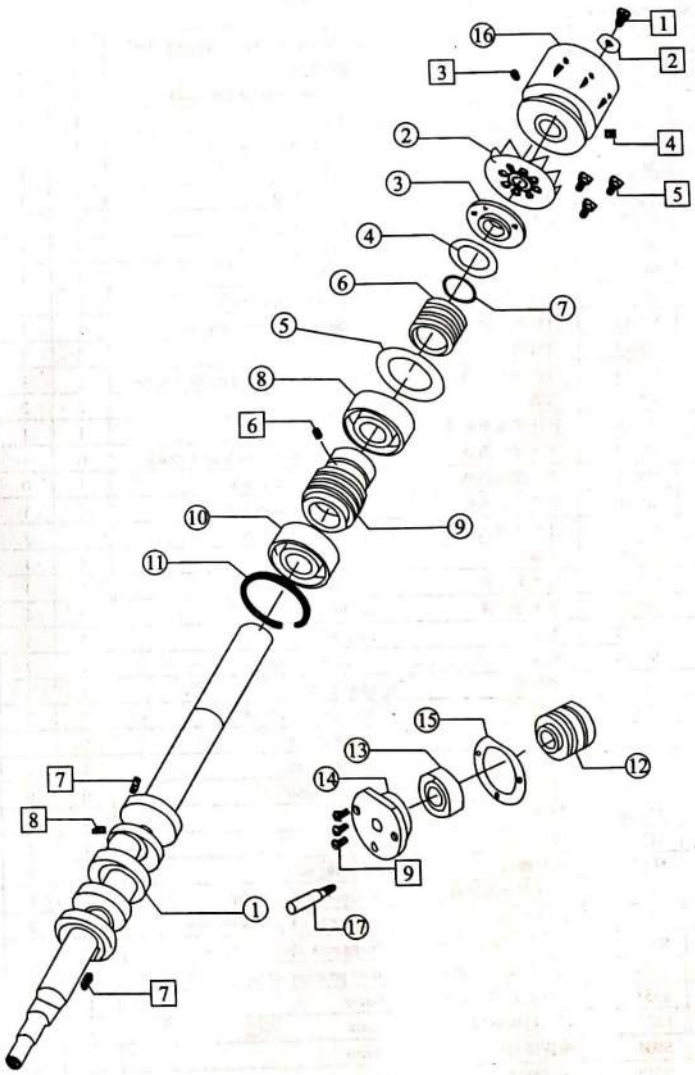

扫描全能王 创建

五、针杆部分 / Needle bar assemblies

序号 Ref.No	零件编号 Part No.	名称 Name		数量 Amt. Req. 3	4	5
1	M5-1	针杆曲柄轴	needle bur driving frame rock shaft	1	1	1
2	M5-2	针杆曲柄销	eccentric shaft	1	1	1
3	M5-3	针杆轴后套筒	needle bar shaft bushing back	1	1	1
4	M5-4	挡圈	snap ring	1	1	1
5	M5-5	针杆传动曲柄	throat driving crank	1	1	1
6	M5-6	油线	oi wick	1	1	1
7	M5-7	滚针轴承	needle bearing	1	1	1
8	M5-8	垫圈	washer ring	1	1	1
9	M5-9	针夹导线销	throat clip guide pin	1	1	1
10	M5-10	油线	oil wick	1	1	1
11	M5-11	针杆摆轴	throat bar rock crank	1	1	1
12	M5-12	行针轴左套筒	needle driving shaft bearing	2	2	2
13	M5-13	密封圈	seal ring	1	1	1
14	M5-14	行针轴右套筒	needle bar rear driving copper bearing	2	2	2
15	M5-15	挡圈	snap ring	1	1	1
16	M5-16	针杆摆轴平衡块	balance block	0	1	0
17	M5-17	针杆摆轴曲柄	needle bar frame rock shaft crank	1	0	1
	5M5-17	针杆摆轴曲柄	throat bar shaft crank	1	1	1
18	M5-18	针杆传动连杆	needle bar connecting rod	1	1	1
19	M5-19	针杆传动连杆销	connecting link pin	1	1	1
20	M5-20	垫圈	washer	1	1	1
21	M5-21	针平夹导套	throat clip guide bushing	1	1	1
22	M5-22	针夹导杆体	needle bar	1	1	1
23	M5-23	毛毡	oil felt	1	1	1
24	M5-24	油线	oil wick	1	1	1
25	M5-25	塑料管	plasties tube	2	2	2
26	M5-26	油线	oil wick	0	1	0
27	4M5-27	针古	needle clamp	1	0	0
	3M5-27	针古	needle clamp	0	0	0
	5M5-27	针古	needle clamp	0	0	1
28	M5-58	机针	needle	1	2	2
29	M5-59	油封	oil seal	4	4	4
1	S057	挡圈螺钉	snep ring screw	1	1	1
2	S102	针杆摆轴曲柄螺钉	hexagon socket screw	2	2	2
3	S055	针杆摆轴平衡块螺钉	balance block position screw	3	3	3
4	S043	行针传动连杆顶丝	frame rock shaft set screw	2	2	2
5	S074	行针传动连杆螺钉	shaft position screw	1	1	1
6	S053	针杆曲柄紧固螺钉	screw	1	1	1
7	S001	油线堵油螺钉	screw	1	1	1
8	S006	垫圈螺钉	screw	1	1	1
9	S012	垫圈螺钉	screw	5	5	5
10	S009	顶圈螺钉	screw	1	1	1
11	E01	卡簧	snap ring			

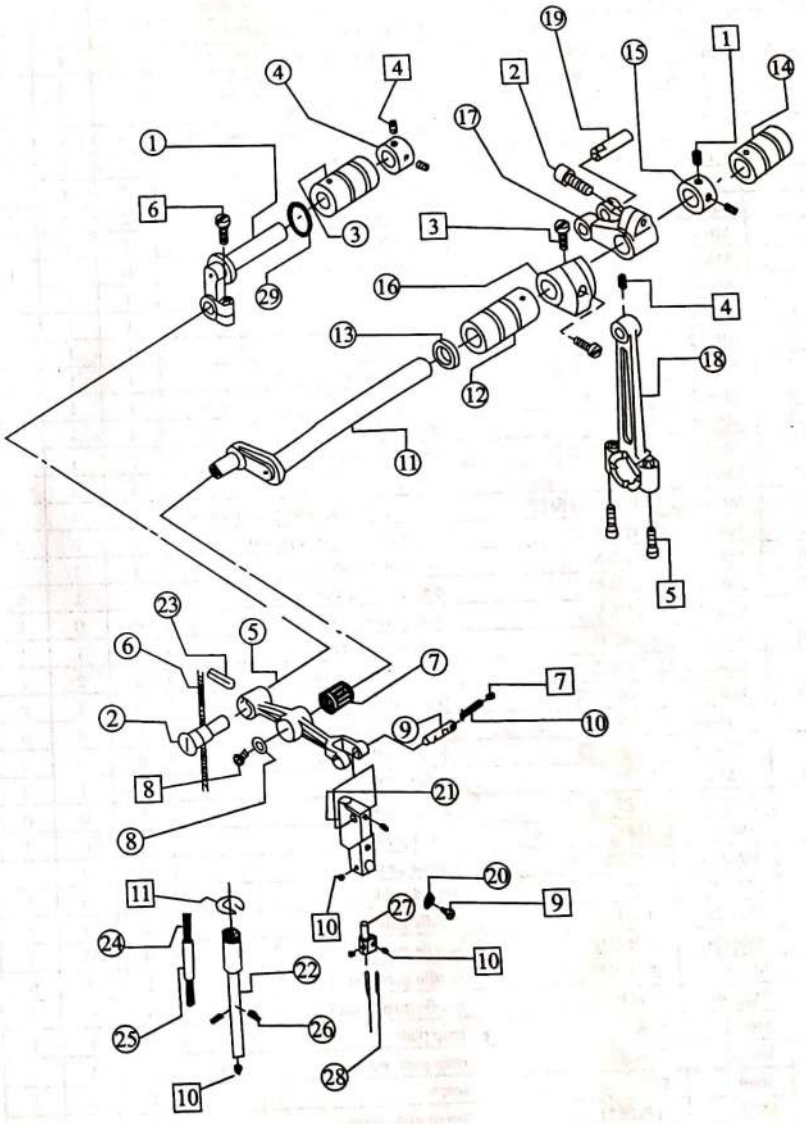

扫描全能王 创建

六、过线部分 / Thread guide assemlies

序号 Ref.No	零件编号 Part No.	名称	Name	数量 Amt. Req.		
				3	4	5
1	M6-1	弯针调压簧	thread tension spring	1	2	2
2	M6-2	夹线螺钉	thread tension screw	3	4	4
3	M6-3A	调压螺母	thread tension nut	3	4	4
4	M6-4	调压止动套	thread tension spring	3	4	4
5	M6-5A	调压止动盖	thread tension spring retainer house	3	4	4
6	M6-6	线片	thread tension disc	6	8	8
7	M6-7	夹线片垫	thread tension disc washer	3	4	4
8	M6-8A	过线板	thread guide	2	2	2
9	M6-9	挑线板	upper thread take-up	1	1	0
	5M6-9	挑线板	upper thread take-up	0	0	1
10	M6-10	硅油盒	oil box	1	1	1
11	M6-11	油毡垫架	oil felt	1	1	1
12	M6-12	过线架	thread guide	1	1	1
13	M6-13	硅油盒胶垫	oil box washer	1	1	1
14	M6-14	油毡垫	oil felt	1	1	1
15	M6-15	拦线板	tension spring	1	1	1
16	M6-16	拦线板去架	thread controller disc holder	1	1	1
17	M6-17	弹簧	spring	1	1	1
18	M6-18	拦线板导向套	thread controller disc guide bushing	1	1	1
19	M6-19	针板座键	threat plate positionign rod	2	2	2
20	M6-20	针板座	threat plate barcket	1	1	1
21	M6-21	过线架	thread mark guide	1	1	0
	5M6-21	过线架	thread mark guide	0	0	1
22	M6-22	护针挡	teat needle guard	1	1	1
23	M6-23	调压簧	thread tension spring	2	2	2
24	4M6-24	前护针挡	front needle guard	0	1	0
	3M6-24	前护针挡	front needle guard	1	0	0
	5M6-24	前护针挡	front needle guard	0	0	1
25	4M6-25	针板	throat plate	0	1	0
	3M6-25	针板	throat plate	1	0	0
	5M6-25	针板	throat plate	0	0	1
26	M6-26A	过线板	thread guide	1	2	1
27	5M6-27	过线	thread guide	0	0	1
28	5M6-28	护针I	needle guard I	0	0	1
29	5M6-29	护针挡II	needle guide II	0	0	1
30	M6-30	护针挡座	needle guard barcket	1	1	0
	5M6-30	护针挡座	needle guard barcket	0	0	1
31	M6-31	挡板	snap plate	1	1	1
32	M6-32	挡板垫	snap plate washer	1	1	1
1	S099	螺钉	screw	1	1	1
2	S035	针板螺钉	throat plate screw	2	2	2
3	S016	前护针板螺钉	fornt needle snap screw	1	1	1
4	S061	针板座螺	throat plat barcket screw	2	2	2
5	S015	过线架螺钉	thread guide holder screw	2	2	2

序号 Ref.No	零件编号 Part No.	名称	Name	数量 Amt. Req.		
				3	4	5
6	S033	硅油盒固定螺钉	oil box set screw	1	1	1
7	S072	硅油盒胶垫固定螺钉	oil box washer set screw	1	1	1
8	S005	后护针挡螺钉	rear needle guard screw	2	2	2
9	S023	护针挡螺钉	needle guard screw	1	1	1
10	W07	护针挡垫圈	needle tuard washer	1	1	1
11	S017	挑线螺钉	thread take up screw	2	2	2
12	S103	挡板螺钉1	snap plate screw I	2	2	2
13	S019	挡板螺钉11	snap plate screw II	1	1	1
14	S104	挡板定位螺钉	snap plate set screw	1	1	1
15	S045	护针挡座螺钉	screw	2	2	2

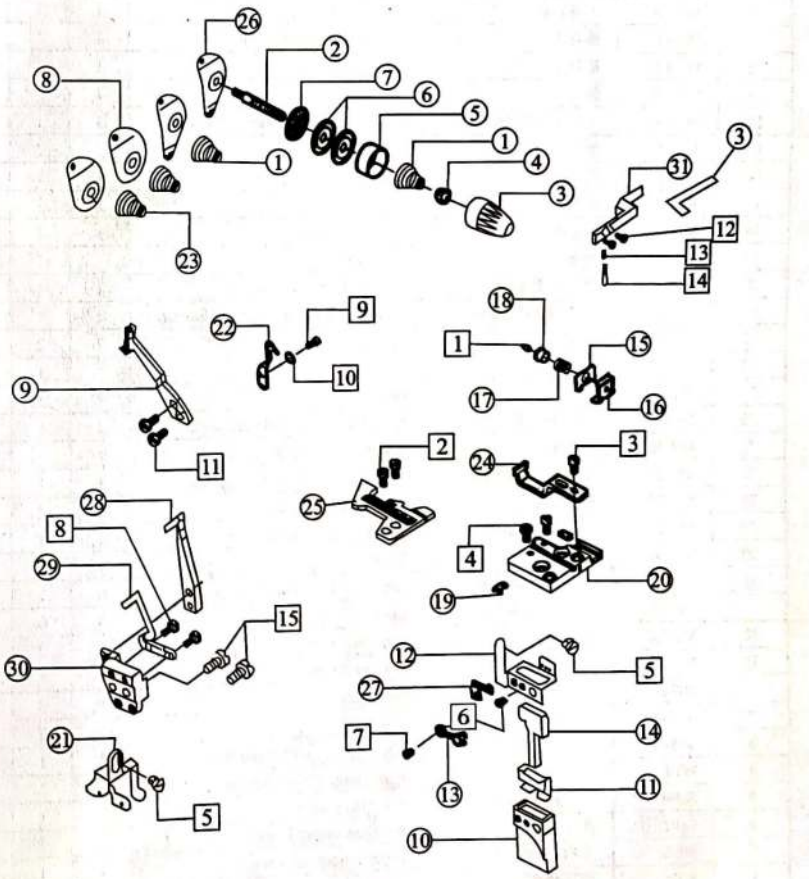

扫描全能王 创建

七、上弯针部分 / Upper looper assemlies

序号 Ref.No	零件编号 Part No.	名称	Name	数量 Amt. Req. 3	4	5
1	M7-1	弯针连杆	looper link	2	2	2
2	M7-2	弯针连杆摆架	looper link holder	2	2	2
3	M7-3	厚垫圈	thickness washer	0	1	0
	5M7-3	厚垫圈	thickness washer	1	0	1
4	M7-4	上弯针轴	upper looper shaft	1	1	1
5	M7-5	大垫圈	big washer	1	1	1
6	M7-6	上弯针轴后套筒	upper looper shaft rear bashing	1	1	1
7	M7-7	上弯针轴前套筒	upper looper shaft foot bushing	1	1	1
8	M7-8	上弯针轴油封	upper looper shaft oil seal	1	1	1
9	M7-9	上弯针轴曲柄	upper looper shaft crant	1	1	1
10	M7-10	上弯针摇杆	upper looper shaft bar	1	1	1
11	M7-11	摇杆销	connecting rod shaft pin	1	1	1
12	M7-12	摇杆卡片	washer	1	1	1
13	M7-13	油线	oil wick	1	1	1
14	M7-14	上弯针轴导块	upper looper slide bar slidel block	1	1	1
15	M7-15	油毡	oil felt	2	2	2
16	M7-16	油毡	oil felt	1	1	1
17	M7-17	油线	oil wick	2	2	2
18	M7-18	滤油板	acreen oil plate	1	1	1
19	M7-19	压板	felt plate	1	1	1
20	M7-20	导架座挡板	thread hlder snap plate	1	1	1
21	M7-21	上弯针轴导架座	upper looper shaft slide bar bracket	1	1	1
22	M7-22	油封	oil seal	2	2	2
23	M7-23	油管	oil tube	1	1	1
24	M7-24	油管	oil tube	1	1	1
25	M7-25	调线刻度板	thread amount regulating plate	1	1	1
26	M7-26	上弯针过线	upper looper thread guide	1	1	1
27	M7-27	上弯针轴过线板	upper looper shaft thread plate	1	1	1
28	M7-28	轴承挡板	shaft bearing guaid	2	2	2
29	M7-29	滚针端面轴承	lower looper holder copper	1	1	1
30	M7-30	弯针	looper	1	1	1
31	M7-31	上弯针摆动曲柄	upper looper crank bearing	0	1	0
	5M7-31	上弯针摆动曲柄	upper looper crank bearing	1	0	1
32	M7-32	穿线管	threading rube	2	2	2
33	M7-33	两孔过线板	two for thread guide	1	1	1
1	S074	连杆螺钉	shaft screw	8	8	8
2	S0384	弯针连杆止动螺钉	screw	2	2	2
3	S058	上弯针轴曲柄螺钉	upper looper shaft crank screw	1	1	1
4	W12	上弯针轴曲柄垫圈	upper looper shaft washer	1	1	1
5	S009	上弯针轴曲柄丝	link pin set screw	1	1	1
6	S101	摆动曲柄螺钉	nexagon socket screw	1	1	1
7	S036	上弯针轴螺钉	upper looper shaft screw	1	1	1
8	W04	弹簧垫圈	wather	1	1	1
9	S032	上弯针轴过线架螺钉	upper looper shaft thread guide screw	2	2	2

序号 Ref.No	零件编号 Part No.	名称	Name	数量 Amt. Req. 3	4	5
10	S027	调线刻度板螺钉	thread amount regulating plate	2	2	2
11	S037	调线刻度板螺钉	screw	1	1	1
12	S014	弯钉过线螺钉	looper shaft thread guide screw	2	2	2
13	W08	弯针过线垫圈	looper shaft thread guide washer	2	2	2
14	S097	上弯针轴导板螺钉	upper looper shaft thread plate screw	1	1	1
15	S062	上弯针轴导板螺钉	upper looper shaft thread plate screw	1	1	1
16	S012	导架座挡板螺钉	thread holder snap plate screw	1	1	1
17	S095	导线座挡板螺钉	thread holder snap plate screw	1	1	1
18	S015	上弯针紧固螺钉	upper looper set screw	1	1	1

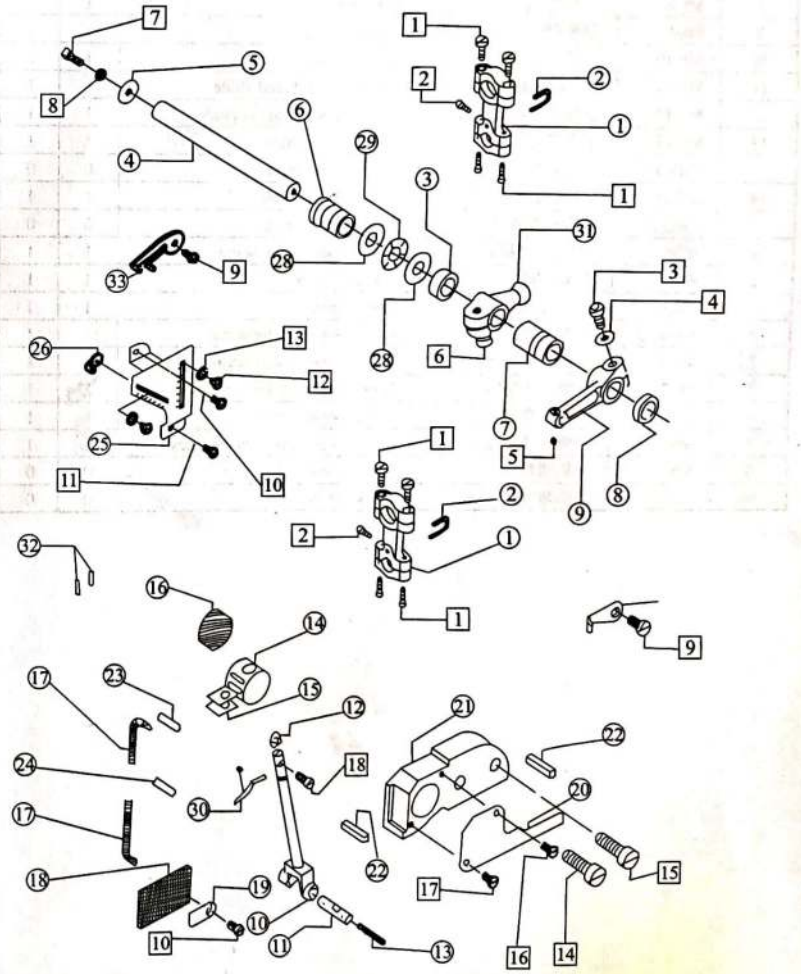

扫描全能王 创建

八、下弯针部分 / Lower looper assemblies

序 号 Ref.No	零件编号 Part No.	名 称	Name	数 量 Amt. Req.		
				3	4	5
1	M8-1	厚垫圈	lower looper shaft copper bushing	1	1	0
	5M8-1	厚垫圈	washer	0	0	1
2	M8-2	下弯针轴垫圈	lower looper shaft washer	1	1	1
3	M8-3	油封	oil seal	1	1	2
4	M8-4	下弯针前套筒	lower looper tront bushing	1	1	1
5	M8-5	下弯针后套筒	lower looper rear bushing	1	1	1
6	M8-6	下弯针架	lower looper holder	1	1	1
7	M8-7	下弯针曲柄垫片	lower looper crank washer	2	2	5
8	M8-8	下弯针	lower looper	1	1	0
9	M8-9	铜垫圈	copper washer	1	1	1
10	M8-10	过线	thread quide	1	1	1
11	M8-11	下弯针过线	lower looper thread guide	1	1	1
12	M8-12	下弯针三孔过先线	lower looper 3-thread guide	1	1	1
13	M8-13	下弯针轴	lower looper shaft	1	1	0
	5M8-13	下弯针轴	lower looper shaft	0	0	1
14	M8-14	下弯针摆动曲柄	lower looper crank	1	1	0
	5M8-14	下弯针摆动曲柄	lower looper crank	0	0	1
1	S036	下弯针轴螺钉	lower looper shaft screw	1	1	1
2	W04	弹簧垫圈	elastic washer	1	1	1
3	S101	摆动曲柄螺钉	crank screw	1	1	1
4	S060	下弯针架钉	lower looper holder screw	1	1	1
5	W12	下弯针架垫圈	lower looper holder washer	1	1	1
6	W07	下弯针架垫圈	lower looper holder washer	1	1	1
7	S022	下弯针螺钉	lower looper screw	1	1	1
8	S032	下弯针过先螺钉	lower looper thread guide screw	1	1	1
9	S067	曲柄螺钉	crank screw	0	0	2
10	S015	曲柄螺钉	crank screw	0	0	2

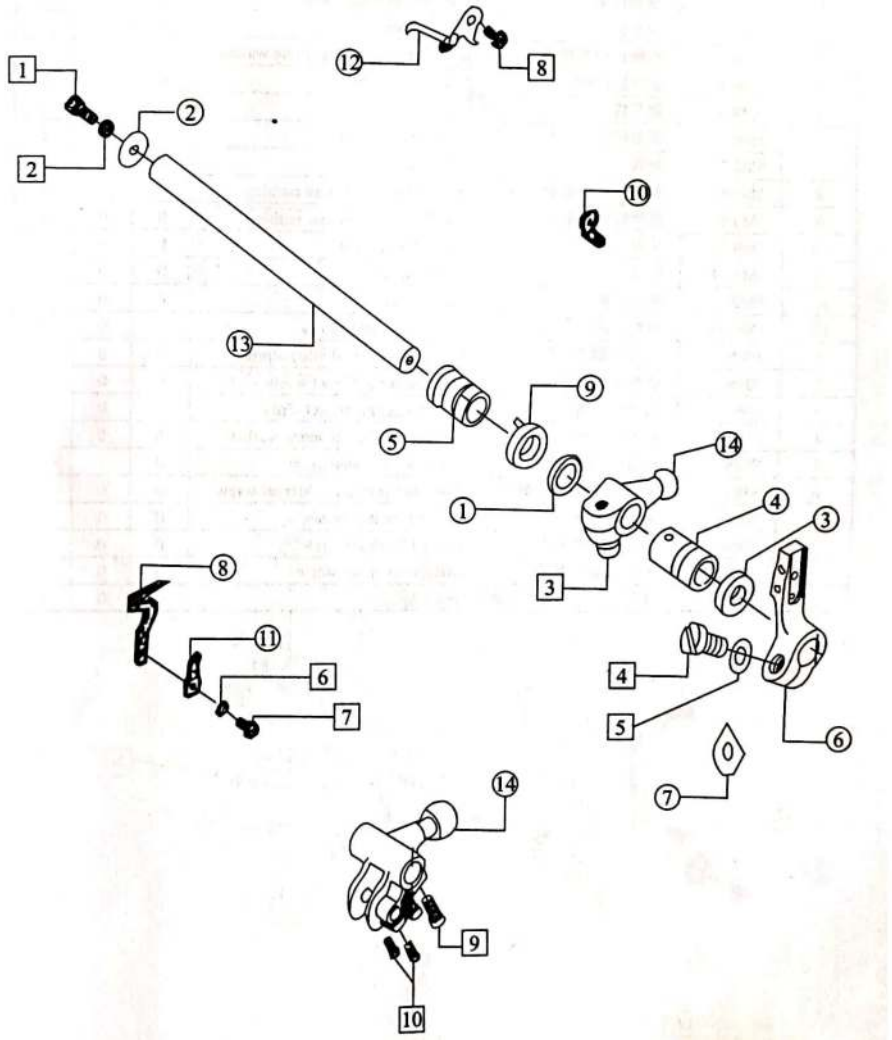

扫描全能王 创建

九、前弯针部分 / Front lower looper assemblies

序 号 Ref.No	零件编号 Part No.	名 称	Name	数 量 Amt. Req.		
				3	4	5
1	5M9-1	前弯针架	front looper shaft holder	0	0	1
2	5M9-2	前弯针	front looper	0	0	1
3	5M9-3	前弯针调节垫片	front looper shaft regulding washer	0	0	1
4	5M9-4	前弯针曲柄	frong looper crank	0	0	1
5	5M9-5	调节板	regulafting plate	0	0	2
6	5M9-6	调节板销	tegulating palte pin	0	0	2
7	5M9-7	油线	oil thread	0	0	1
8	5M9-8	前弯针轴前套筒	front looper shaft front bushing	0	0	1
9	5M9-9	前弯针轴后套筒	front looper shaft rear bushing	0	0	1
10	5M9-10	前弯针轴	frong looper shaft	0	0	1
11	5M9-11	驱动座	driving lever	0	0	1
12	5M9-12	驱动曲柄	driving crank	0	0	1
13	5M9-13	前弯针滑块	front looper slide block	0	0	1
1	S005	前弯针调节垫螺钉	front looper thread ruide screw	0	0	1
2	S016	前弯针固定螺钉	front looper guide set screw	0	0	1
3	S060	前弯针架螺钉	front looper holder set screw	0	0	1
4	W12	前弯针架螺钉垫	front looper holder screw washer	0	0	2
5	S028	前弯针曲柄螺钉	front looper crank screw	0	0	2
6	S101	前弯针曲柄紧固螺钉	front looper crank holder set screw	0	0	1
7	S043	驱动曲柄顶丝	nexagon socket sefscrew	0	0	1
8	S094	驱动曲柄座顶丝	driving levdr set screw	0	0	1
9	S093	驱动曲柄座螺钉	driving lever set screw	0	0	1
10	E03	卡簧	snapring	0	0	1

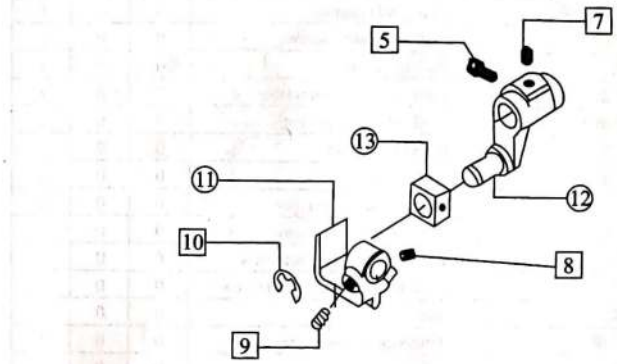

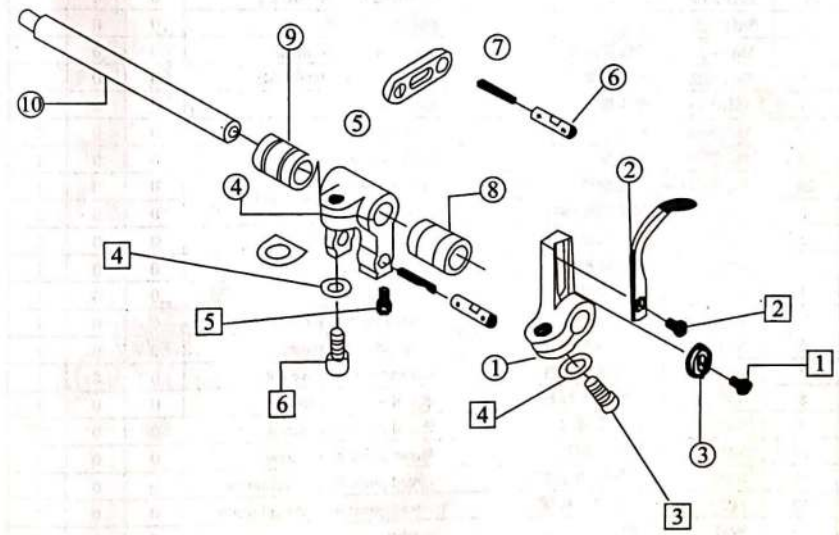

扫描全能王 创建

十、打线凸轮部分 / Cam assemblies

序号 Ref.No	零件编号 Part No.	名称	Name	数量 Amt. Req. 3	4	5
1	5M10-1	横轴连杆	bearing snap uing screw	0	0	1
2	5M10-2	连杆滚针轴承	bfeat guide camtop	0	0	1
3	5M10-3	轴承挡圈	shaft snap crank screw	0	0	1
4	5M10-4	曲柄销	shaft snap washer	0	0	1
5	5M10-5	横轴曲柄	crank adjusting pin wather	0	0	1
6	5M10-6	横轴曲柄轴	crank adjusting pin nut	0	0	1
7	5M10-7	横轴右套筒	holder finger nut	0	0	1
8	5M10-8	横轴左套筒	holder finger	0	0	1
9	5M10-9	油封	thread guide plate screw	0	0	1
10	5M10-10	打线凸轮	thread guide plate screw	0	0	1
11	5M10-11	导线板	thread guide finger set screw	0	0	1
12	5M10-12	过线板	thread guide for 2-thread screw	0	0	2
13	5M10-13	导线架	washer	0	0	1
14	5M10-14	波形垫圈	thread guide hook screw	0	0	1
15	5M10-15	限位板		0	0	1
16	5M10-16	过线环	thread guide hook	0	0	1
17	5M10-17	二眼过线板	2-thread thread guide	0	0	1
18	5M10-18	后导线板	rear thread guide finger set screw	0	0	1
19	5M10-19	导线管套	thread guide tube bushing	0	0	2
20	5M10-20	过线管	thread guide tube	0	0	1
21	5M10-21	过线管压板	thread guide tube olamp	0	0	2
22	5M10-22	压线器架	thread tension plate holder	0	0	1
23	5M10-23	夹线挺	holder spool	0	0	1
24	5M10-24	夹线片	holder spool	0	0	2
25	5M10-25	夹线簧	holder spool spring	0	0	1
26	5M10-26	调压螺母	presser nut	0	0	1
1	S002	轴承挡圈螺钉	bearing snap ring screw	0	0	2
2	S009	打线凸轮顶丝	cam set screw	0	0	2
3	S101	横轴曲柄螺钉	crank set screw	0	0	1
4	W12	横轴曲柄垫圈	crank washer	0	0	1
5	W06	曲柄调整销垫圈	crank adjusting pin wather	0	0	1
6	N02	曲柄调整螺母	crank adjusting pin nut	0	0	1
7	N03	夹线器架螺母	thread tension scrwe nut	0	0	1
8	S032	夹线器架螺钉	thread tension screw	0	0	1
9	S003	过线板螺钉	thread guide plate screw	0	0	2
10	S017	导线板螺钉	thread guide plate screw	0	0	1
11	S038	导线架固定螺钉	thread guide finger seet screw	0	0	1
12	S027	二眼过线板螺钉	thread guide for 2-thread screw	0	0	3
13	W11	垫圈	washer	0	0	1
14	S020	进线环螺钉	thread guide hook screw	0	0	1

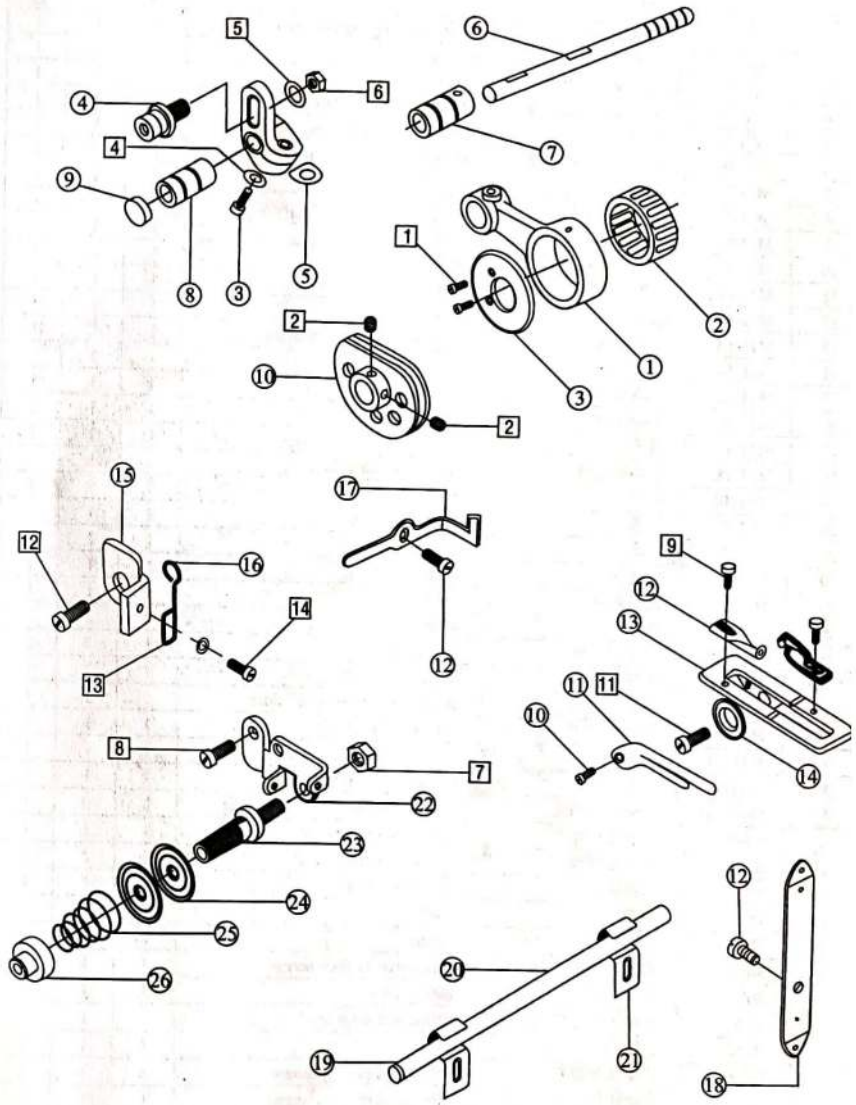

扫描全能王 创建

十一、差动送布部分 / Differential feed assemblies

序号 Ref.No	零件编号 Part No.	名称	Name	数量 Amt. Req. 3	4	5
1	M11-1	送布调节器杆	stich length reglating shaft	1	1	1
2	M11-2	针距调节器簧	spring	1	1	1
3	M11-3	送布调节器油封	oil washer	1	1	1
4	M11-4	针距调节凸轮组件	stitch length regulating cam asm	1	1	1
5	M11-5	针距调节滑块	stitch length regulating block	1	1	1
6	M11-6	针距调节滑块压簧	stitch length regulating block spring	2	2	2
7	M11-7	针距凸轮	stitch length cam	1	1	1
8	M11-8	针距调节压板	stitch length regulating plate	1	1	1
9	M11-9	送布凸轮	feed lingth cam	1	1	1
10	M11-10	送布凸轮簧	feed cam spring	1	1	1
11	M11-11	送布凸轮座销	feed cam pin	1	1	1
12	M11-12	送布连杆	feed link	1	1	1
13	M11-13	滚动轴承	feed rod rolling pin bearing	1	1	1
14	M11-14	送布曲柄	feed crank	1	1	1
15	M11-15	差动连杆	differential link	1	1	1
16	M11-16	差动曲柄	differential crank	1	1	1
17	M11-17	销子	pin	1	1	1
18	M11-18	差动轴套筒	differential shaft bearing	1	1	1
19	M11-19	油封	oil seal	1	1	1
20	M11-20	挡圈	snap ring	1	1	1
21	M11-21	弹簧	spring	1	1	1
22	M11-22	扩建圈	washer	1	1	1
23	M11-23	调节滑块	regalating block	1	1	1
24	M11-24	垫圈	washer	2	2	2
25	M11-25	送布凸轮座	feed cam	1	1	0
26	M11-26	垫圈	washer	1	1	1
27	M11-27	差动调节架	differential regulating holder	1	1	1
28	M11-28	调节螺钉	regulating screw	1	1	1
29	M11-29	卡簧	regulating screw spring	1	1	1
30	M11-30	差动调节杆	differential rigulating link	1	1	1
31	5M11-31	曲柄连杆凸轮	crank link cam	0	0	1
1	S096	差动连杆螺钉	differential link screw	1	1	1
2	S101	差动曲柄螺钉	differential crank screw	2	2	2
3	S028	挡圈螺钉	snap ring screw	1	1	1
4	W15	垫圈	washer	1	1	1
5	S01	垫圈	washer	2	2	2
6	S037	差动调节杆螺钉	differential positon screw	1	1	1
7	S012	卡簧螺钉	spring screw	1	1	1
8	S034	差动调节架紧固螺钉	differential set screw	1	1	1
9	S079	螺钉	screw	1	1	1
10	S027	差动调节螺钉	differential positop screw	1	1	1
11	S032	差动调节架螺钉	differential positop screw	1	1	1
12	S043	针距调节齿轮螺钉	stitch length	4	4	4
13	S008	送布凸轮调节螺钉	feed cam regulating screw	1	1	1
14	S011	送布凸轮螺钉	feed cam screw	1	1	1
15	S040	螺钉	screw	1	1	1
16	S036	针距调节压板螺钉	stitch length screw	1	1	1

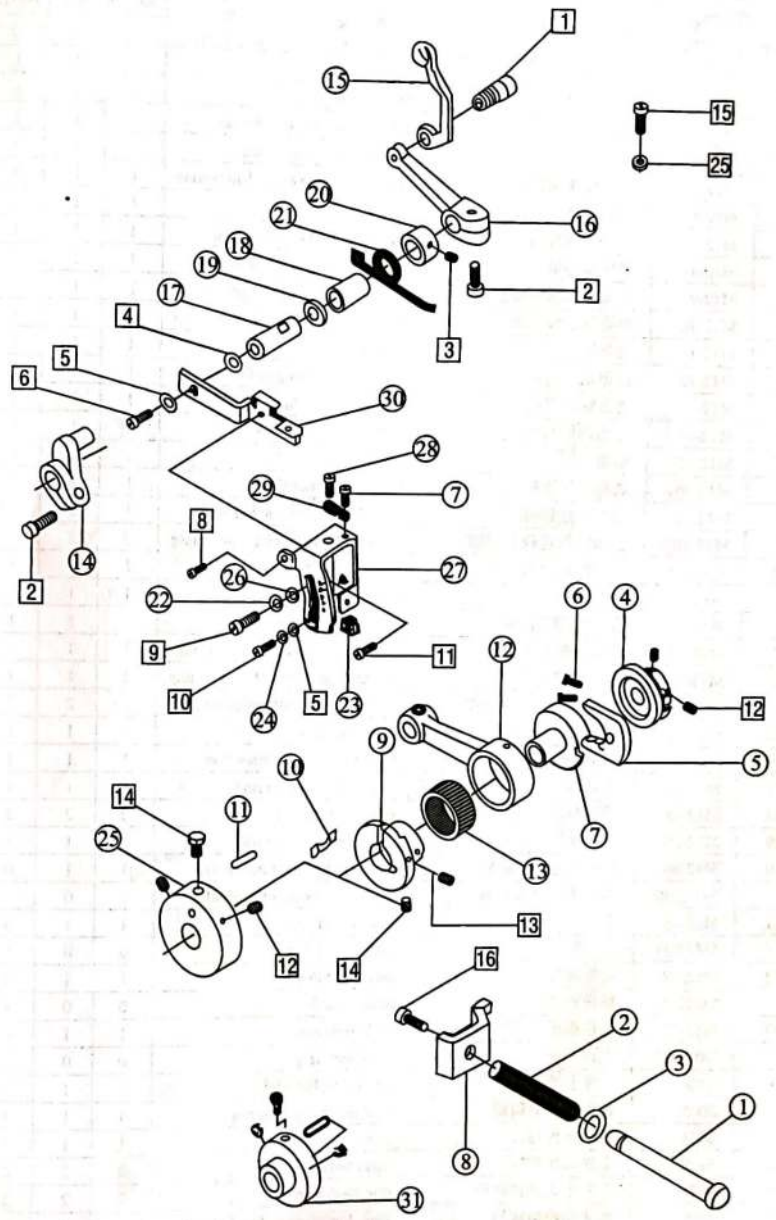

扫描全能王 创建

十二、抬牙送布部分 / Feed doy assemblies

序号 Ref.No	零件编号 Part No.	名称 Name		数量 Amt. Req.		
				3	4	5
1	M12-1	牙连接板	doy link plate	1	1	1
2	M12-2	送布牙架	feed doy holder	1	1	1
3	M12-3	差动牙架	differential feed doy holear	1	1	1
4	M12-4	抬牙滑块	feed doy lift slide block	1	1	1
5	M12-5	抬牙滑块滚针轴承(已取消)	feed doy lift slide block shaft bearing	1	1	1
6	M12-6	卡簧	snap ring	1	1	1
7	M12-7	差动送布滑块	differential feed slide block	1	1	1
8	M12-8	滑块偏心轴	slide block eccentric share	1	1	1
9	M12-9	差动送布滑块偏心垫	diferential feed slide block eccentric washer	1	1	1
10	M12-10	滑块偏心轴套筒	slide block eccentric shaft bushing	1	1	1
11	M12-11	送布轴	feed shaft	1	1	1
12	M12-12	送布轴左套筒	feed shaft bashing (left)	1	1	1
13	M12-13	送布轴右套筒	feed shaft bashing (right)	1	1	1
14	M12-14	送布调整曲柄	feed regulating crank	1	1	1
15	M12-15	垫圈	washer	1	1	1
16	M12-16	送布牙架连杆	feed doy holder link	1	1	1
17	M12-17	送布牙连杆套	feed doy holder link bashing	1	1	1
18	M12-18	送布牙架连杆套垫圈	differetial feed doy holder link bashing	2	2	2
19	M12-19	曲柄滑块盖板	crank slide block cover	1	1	1
20	M12-20	曲柄滑块	crank slide block	1	1	1
21	M12-21	差动牙调节曲柄	feed regulating crank	1	1	1
22	M12-22	差动牙架连杆	differential feed doy holder link	1	1	1
23	M12-23	差动牙架连杆套	differential feed doy holder link bushing	1	1	1
24	M12-24	差动牙架连杆套垫圈	pifferential feed doy holder link bushing washer	2	2	2
25	M12-25	挡油板	screw oil plate	1	1	1
26	M12-26	牙架导轨	feed doy carrier connection rod	1	1	1
27	M12-27	密封圈	sealing connecting ring	1	1	1
28	M12-28	活动油封	adjustable oil seal	2	2	2
29	M12-29	密封导架	sealing connecting rod	1	1	1
30	M12-30	送布牙连杆偏心轴	feed doy link ecentric shaft	1	1	0
	5M12-30	送布牙连杆偏心轴	feed doy link ecentric shaft	0	0	1
31	M12-31	差动牙	differential dog	1	1	0
	5M12-31	差动牙	differential dog	0	0	1
32	M12-32	辅送布牙	main feed dog	1	1	0
	5M12-32	辅送布牙	main feed dog	0	0	1
33	M12-33	主送布牙	main feed dog	1	1	0
	5M12-33	主送布牙	main feed dog	0	0	1
1	S028	调牙套筒螺钉	regulating bushing	1	1	1
2	S005	辅助调牙套筒螺钉	feed dog bushing screw	1	1	1
3	S024	牙架接板螺钉	screw	1	1	1
4	S100	主送布牙螺钉	main fed dog screw	2	2	2
5	S029	左右牙叉连杆螺钉	dog hloder link	2	2	2
6	S006	抬牙布曲柄螺钉	feed dog lift slide block screw	1	1	1
7	S101	右送布曲柄螺钉	feed shaft crank screw (right)	2	2	2

序号 Ref.No	零件编号 Part No.	名称 Name		数量 Amt. Req.		
				3	4	5
8	S012	左曲柄螺钉	crank screw (left)	5	5	5
9	S069	曲柄滑动盖螺钉	crank slide block cover screw	2	2	2
10	S034	牙叉叉块螺钉II	tooth rorks screw	1	1	1
11	S046	牙叉叉块螺钉I	tooth rorks screw	4	4	4
12	S031	螺钉	screw	1	1	1
13	N02	右送布曲柄销螺母	reed crank pin shaft nat	1	1	1

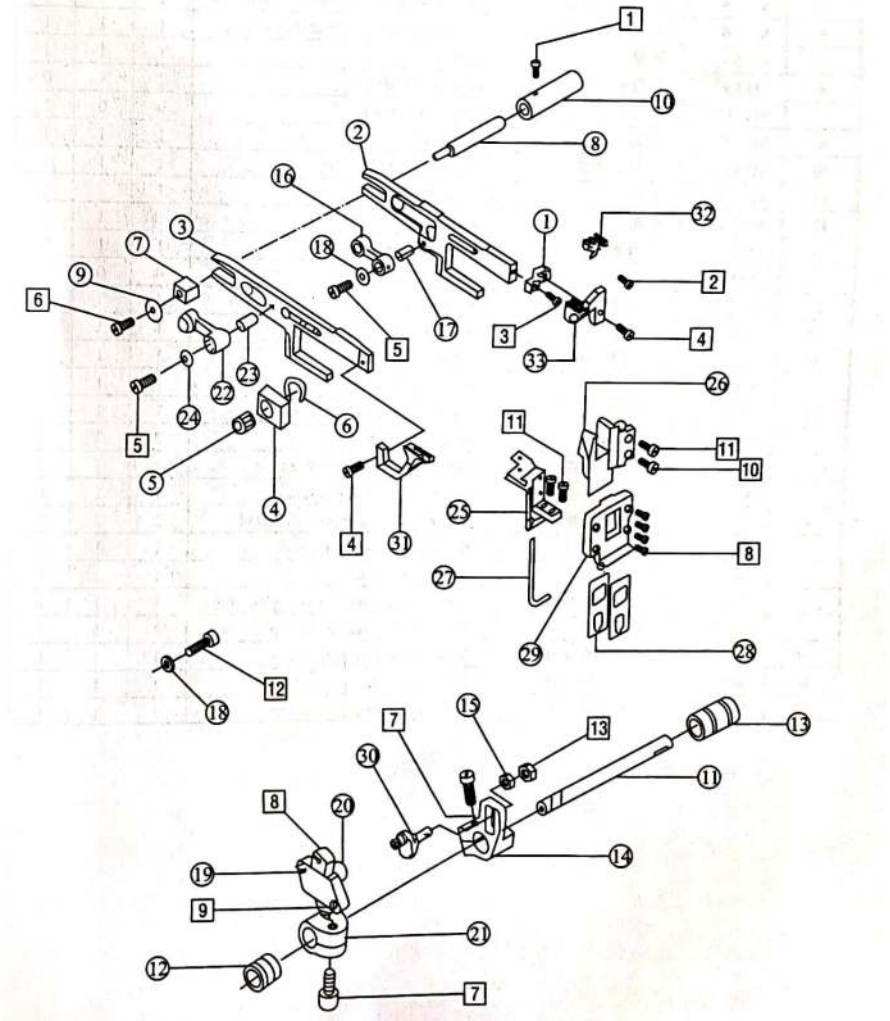

扫描全能王 创建

十三、剪切部分 / Trimming assemblies

序号 Ref.No	零件编号 Part No.	名称 Name		数量 Amt. Req.		
				3	4	5
1	M13-1	上刀连杆	upper knife driving connecting link	1	1	1
2	M13-2	上刀曲柄	upper knife crank	1	1	0
	5M13-2	上刀曲柄	upper knife crank	0	0	1
3	M13-3	曲柄销	crank pin	1	1	1
4	M13-4	上刀架轴	upper knife frame rock shaft	1	1	1
5	M13-5	上刀轴左套筒	upper knife frame rock shaft brushing left	1	1	1
6	M13-6	上刀轴右套筒	upper knife frame rock shaft bushing right	1	1	1
7	M13-7	垫圈	washer	1	1	1
8	M13-8	上刀座	upper knife holder	1	1	0
	5M13-8	上刀座	upper knife holder	0	0	1
9	M13-9	挡圈	snap ring	1	1	1
10	M13-10	上刀架轴圈	upper knife holder pin	1	1	1
11	M13-11	上刀	upper knife	1	1	1
12	M13-12	垫圈	washer	1	1	1
13	M13-13	下刀架	lower knife holder	1	1	0
	5M13-13	下刀架	lower knife holder	0	0	1
14	M13-14	下刀架套筒	lower knife holder bushing	1	1	1
15	M13-15	下刀架弹簧	lower knife holder spring	1	1	1
16	M13-16	下刀架挡板	lower knife holder	1	1	1
17	M13-17	下刀	lower knife	1	1	1
18	M13-18	下刀压板	lower knife holder locking plate	1	1	1
1	S057	挡圈螺钉	snapring screw	2	2	2
2	S010	上刀曲柄紧固螺钉	upper knife crank set screw	1	1	1
3	S043	上刀曲柄销螺钉	upper knife crank pin screw	1	1	1
4	S074	上刀连杆螺钉	upper knife conneting link screw	2	2	2
5	S046	上刀座螺钉	upper knife holder screw	1	1	1
6	S025	上刀螺钉	upper knife screw	1	1	1
7	S036	下刀压板螺钉	lower knife holder locking plate screw	1	1	1
8	S033	下刀架螺钉	lower knife holder locking plate screw	1	1	1
9	S045	下刀挡板螺钉	lower knife snap plate screw	1	1	1
10	S022	下刀挡板螺钉	lower knife snap plate screw	1	1	1
11	N01	下刀挡板螺母	lower knife snap plate screw	1	1	1

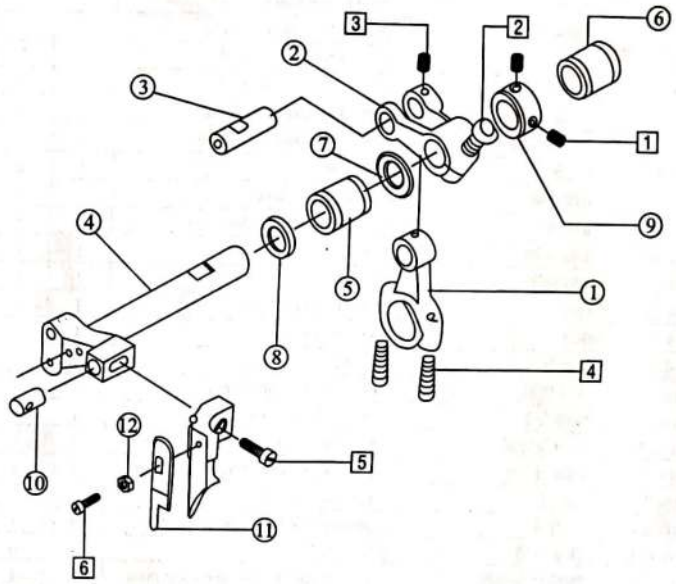

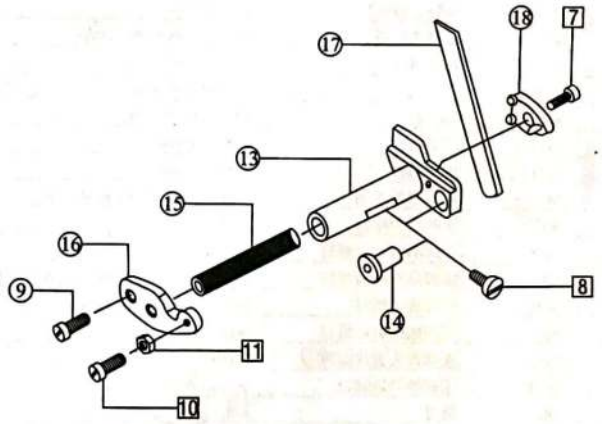

扫描全能王 创建

十四、压布部分 / Presser foot assemblies

序号 Ref.No	零件编号 Part No.	名称 Name		数量 Amt. Req. 3	4	5
1	M14-1	压脚架	presser foot holder	1	1	1
2	M14-2	压脚轴套	presser foot shaft bushing	1	0	1
3	M14-3	压脚架销	presser foot holder pin	1	1	0
4	M14-4	压脚架轴	presser foot holder shaft	1	1	1
5	M14-5	压脚轴套筒	presser foot shaft bushing	1	1	1
6	M14-6	压脚轴挡圈	presser foot shaft snap ring	1	1	1
7	M14-7	抬挡簧	lever spring	1	1	1
8	M14-8	压脚曲柄	presser foot crank	1	1	1
9	M14-9	压脚柄	presser foot lifting lever	1	1	1
10	M14-10	压脚柄勾	hook	1	1	1
11	M14-11	压脚柄簧	spring	1	1	1
12	M14-12	割线刀	thread cutting knife	1	1	1
13	M14-13	压杆	presser barhead	1	1	1
14	M14-14	压杆簧	presser bar spring	1	1	1
15	M14-15	压杆螺钉	presser regulating screnl	1	1	1
16	M14-16	压脚扳手	presser foot lifting handle	1	1	1
17	M14-17	压力簧导销	presser foot lifting anh	1	1	1
18	M14-18	压脚扳手座	presser foot lifting handle bracket	1	1	1
19	M14-19	压杆套	presser bar bushing	1	1	1
20	M14-20	压力簧	presser foot liftin spring	1	1	1
21	5M14-21	压脚弹簧	presser foot	0	0	1
22	M14-22	压脚架连接板	presser foot holder conneting plate	1	1	1
23	M14-23	压脚接柄	presser foot holder	1	1	1
24	M14-24	压脚小舌头簧片	presser foot base	1	1	1
25	M14-25	压脚底板簧片	presser foot	1	1	1
26	M14-26	压脚架护罩	presser foot holder cover	1	1	1
27	M14-27	压脚组件	presser foot form	0	1	0
28	M14-28	压脚底板	presser foot base	0	1	0
29	M14-29	小压脚	lifter presser foot	0	1	0
30	M14-30	压脚组件	presser form	1	0	0
31	5M14-31	压脚组件	presser form	0	0	1
32	M14-32	抬压脚扳手销	presser foot lifting handle pin	1	1	1
1	S059	压脚柄勾螺钉	screw	1	1	1
2	S030	压脚柄勾定位螺钉	set screw	1	1	1
3	S011	压脚架连接板螺钉	presser foot holder commecting plate screw	2	2	2
4	S016	压脚接柄螺钉	presser foot holder screw	1	1	1
5	S004	压脚底板簧片螺钉	screw	1	1	1
6	S013	压脚舌头簧片螺钉	screw	1	1	1
7	S068	压脚脚曲柄螺钉	presser foot crand screw	1	1	1
8	N03	螺母	nut	1	1	1
9	S010	压脚曲柄定位螺钉	presser foot crand screw	1	1	1
10	S009	压脚轴挡套圈螺钉	presser foot shaft snap washer screw	3	3	3
11	S043	螺钉	screw	1	1	1
12	S071	割线刀螺钉	thread cutting knife screw	2	2	2
13	S007	压脚扳手螺钉	presser footlifting handle screw	1	1	1

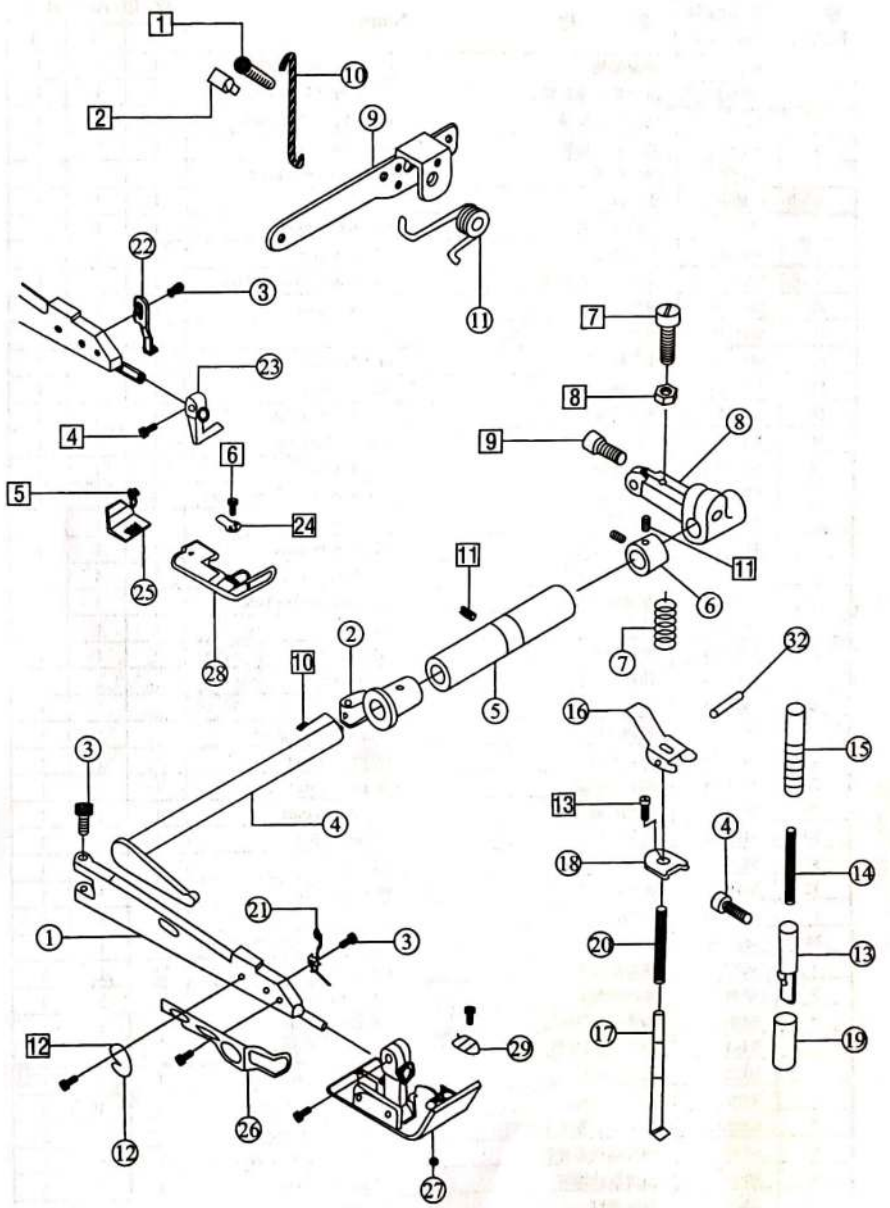

扫描全能王 创建

十五、润滑部分 / Lubrication assemblies

序号 Ref.No	零件编号 Part No.	名称 Name		数量 Amt. Req. 3	4	5
1	M15-1	油泵蜗轮	oil pump worm gear	1	1	1
2	M15-2	滑块泵五星齿轮套	oil pump rotator bushing	1	1	1
3	M15-3	油泵齿轮长轴	oil pump rptatpr shaft	1	1	1
4	M15-4	油泵五星齿轮	oil pump rotator	1	1	1
5	M15-5	油泵罩板	oil pump cover plate	1	1	1
6	M15-6	滤油器	oil clearner	1	1	1
7	M15-7	滤油器接头	oil cljerner joint	1	1	1
8	M15-8	滤油器盖	oil clerner cover	1	1	1
9	M15-9	滤油器盖密封圈	oil clerner cover seal ring	1	1	1
10	M15-10	润滑提示	ingicaing plate	1	1	1
11	M15-11	油管	oil tube	1	1	1
12	M15-12	油管接头I	oil tube joint	1	1	1
13	M15-13	油管接头II	oil tube joint	1	1	1
14	M15-14	油管卡簧	oil tube shap ring	4	4	4
15	M15-15	润滑套	lubrcate bushing	1	1	1
16	M15-16	上配油器	upper screen	1	1	1
17	M15-17	下配油器	lower screen	1	1	1
18	M15-18	调节销	regulating pin	1	1	1
19	M15-19	油量显示座	oil show bracket	1	1	1
20	M15-20	油量显示器杆	oil show cleaner link	1	1	1
21	M15-21	油量显示支架	oil show cleaner guard	1	1	1
22	M15-22	油盘	oil pan	1	1	1
23	M15-23	油盘垫圈	oil pan washer	1	1	1
24	M15-24	油标不干胶	boug on with	1	1	1
25	M15-25	油标刻度	oil dial	1	1	1
26	M15-26	堵油垫圈	oil seal	1	1	1
27	M15-27	油盘磁铁	oil pan magnet	1	1	1
28	M15-28	油盘磁铁盖	oil pan magnet cover	1	1	1
29	M15-29	滤油网固定架	oil screen holder	1	1	1
30	M15-30	滤油网	oil screen felt	1	1	1
31	M15-31	油标	oil bouy	1	1	1
32	M15-32	油泵体组件	oil pump asm	1	1	1
33	M15-33	回油网		1	1	1
34	M15-34	油封		1	1	1
1	S057	油泵蜗轮螺钉	oil pamp worm gear screw	2	2	2
2	S024	滤油网螺钉	oil cleaner screw	3	3	3
3	S086	油管接头II螺钉	oil tube joint screw	1	1	1
4	S063	油管接头I螺钉	oil tube joint screw	1	1	1
5	S052	配油器螺钉	oil screen screw	1	1	1
6	S039	滤油器盖螺钉	oil screen cover screw	3	3	3
7	S042	油量显示器支架螺钉	oil boy finger screw	2	2	2
8	S037	油盘磁铁盖螺钉	oil pan magnet cover screw	1	1	1
9	S066	油盘放油螺钉	oil pan oil screw	1	1	1
10	S048	油泵螺钉	oil pump screw	1	1	1
11	S065	油泵体螺钉	oil pumps asm svrew	1	1	1

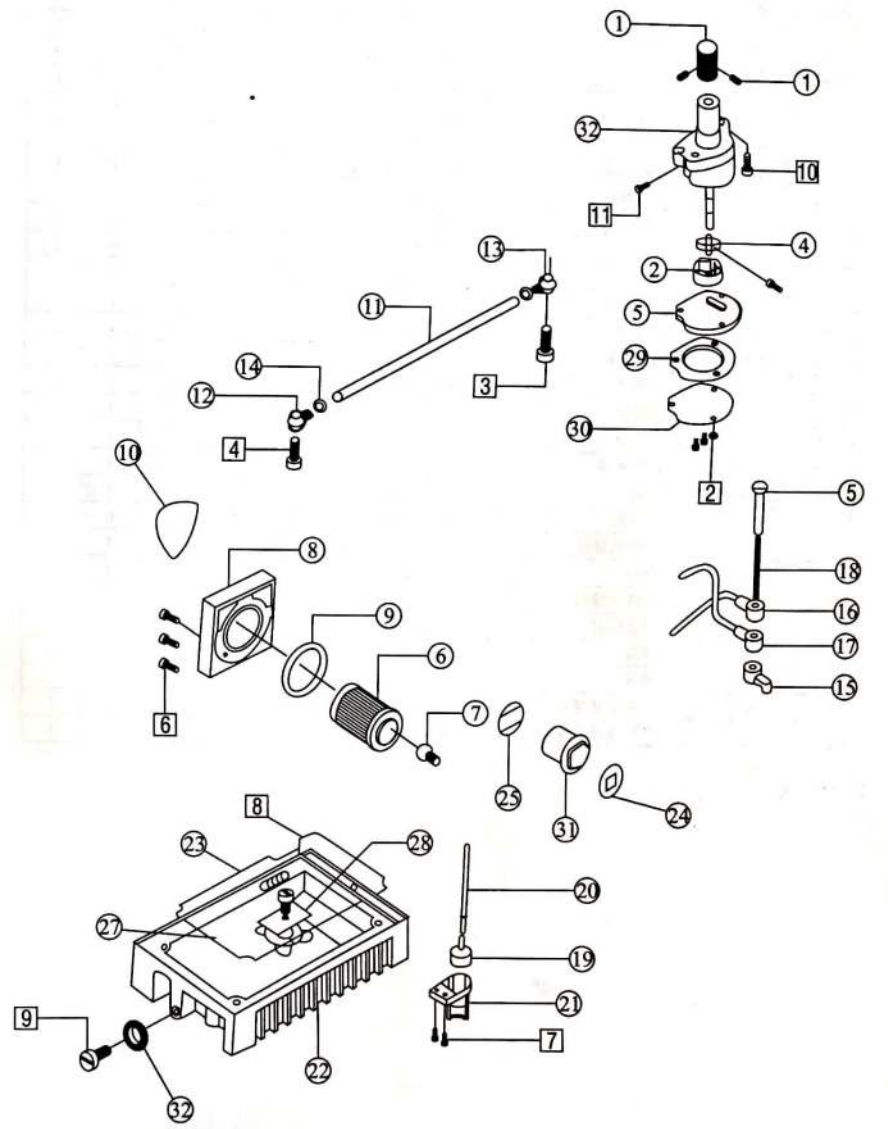

扫描全能王 创建

十六、送布挡料部分 / Feed snap assemblies

序 号 Ref.No	零件编号 Part No.	名 称	Name	数 量 Amt. Req.		
				3	4	5
1	M16-1	油堵	oil seal	1	1	1
2	M16-2	机针冷却器	needle cooler	1	1	0
	5M16-2	机针冷却器	needle cooler	0	0	1
3	M16-3	油管	oil tube bracker	1	1	1
4	M16-4	硅油冷却油线	oil wick	1	1	1
5	M16-5	下硅油盒盖	lower oil cover	1	1	1
6	M16-6	下硅油盒	lower oil box	1	1	1
7	M16-7	油棉	oil felt	1	1	0
	5M16-7	油棉	oil felt	0	0	1
8	M16-8	油线	oil wick	1	1	1
9	M16-9	送料支架	cloth guide holder	1	1	1
10	M16-10	铰链板	oinge plate	1	1	1
11	M16-11	硅油棉块	oil felt block	1	1	
12	M16-12	铰链销	hinge pin	1	1	1
13	M16-13	铰链簧片	hinge spring	1	1	0
14	M16-14	挡料板	snap plate	1	1	1
15	M16-15	挡料板座	snap plate bracket	1	1	1
16	M16-16	挡料板	snap plate	1	1	0
	5M16-16	挡料板	snap plate	0	0	1
1	S018	挡料板螺钉	snap late screw	1	1	1
2	W09	垫圈	washer	1	1	1
3	S021	铰链簧螺钉	hinge spring screw	1	1	1
4	S026	铰链螺钉	hinge screw	2	2	2
5	W11	垫圈	washer	2	2	2
6	N03	螺母	nat	1	1	1
7	S047	送布支架螺钉	cloth guide holder screw	1	1	1
8	S037	机针冷却器螺钉	needle cooler screw	3	3	3

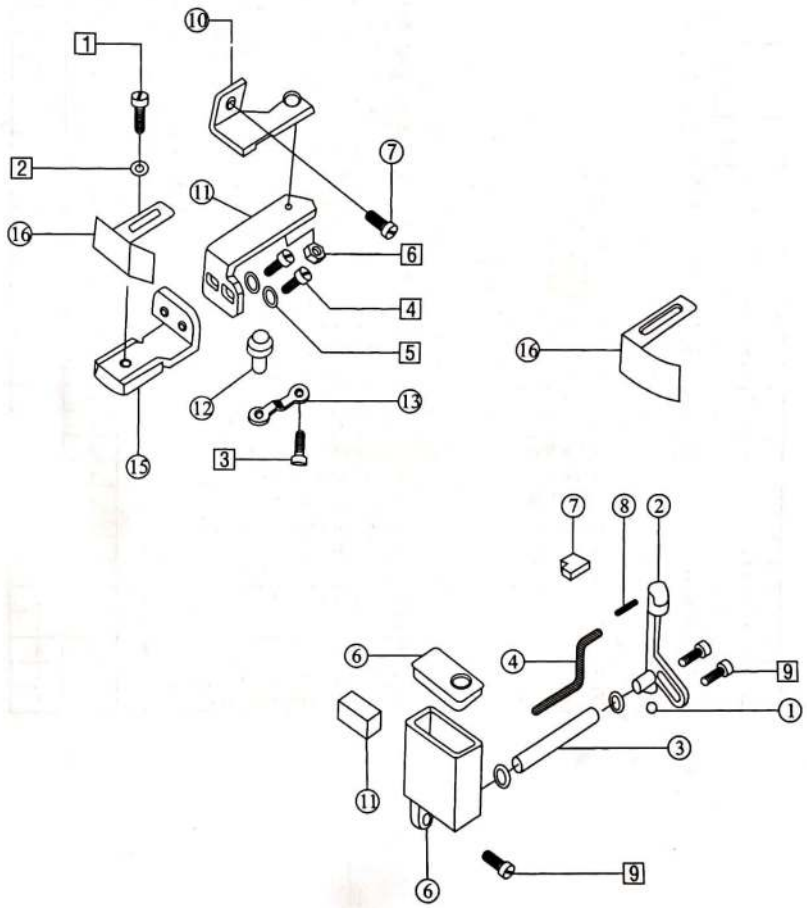

扫描全能王 创建

十七、线架部分 / Thread spool assemblies

序 号 Ref.No	零件编号 Part No.	名 称	Name	数 量 Amt. Req.		
				3	4	5
1	M17-1	上管	upper thread columm	1	1	1
2	M17-2	下管	lower thread columm	1	1	1
3	M17-3	套	bushing	1	1	1
4	M17-4	长托线架	long thread spool troy bracket	1	1	1
5	M17-5	导线环	thread guide hook	4	4	4
6	M17-6	线托棒	spool pin	3	4	5
7	M17-7	线盘	spool tray	3	4	5
8	M17-8	线圈定位套	centering device	3	4	5
9	M17-9	棒架	clamp plate	1	1	1
10	M17-10	线盘垫	spool tray cushion	3	4	5
11	M17-11	导线棒	thread tuide connecting bar	1	1	1
12	M17-12	因达器	thread guide joint	1	1	1
13	M17-13	固定板	thread stamcl holder	1	1	1
14	M17-14	导线棒	thread guide bar	1	1	1
15	M17-15	大导线棒	thread spool trav bracket	1	1	1
16	M17-16	过线板	thread guide plate	1	1	1
17	M17-17	托线架	thread spool tray sracket	1	1	1
18	M17-18	过线环	thread guide hook	3	3	3
19	M17-19	棒帽	rubber seal	1	1	1
1	S088	导线环螺钉	thread guide hook screw	4	4	4
2	N06	导线环螺母	thread guide hook screw	4	4	4
3	W02	导线环垫圈	thread guide washer	4	4	4
4	S075	棒架螺钉	clamp plate screw	3	3	3
5	S051	棒架螺钉	styck holder screw	1	1	1
6	N04	螺母	nut	8	8	8
7	W16	下管垫圈	lower washer	2	2	2
8	N05	螺母	nut	1	1	1
9	W05	垫圈	nut	4	4	4
10	S087	固定板螺钉	thread stand holder screw	1	1	1
11	S089	固定板连接螺钉	thread stand holder join screw	1	1	1

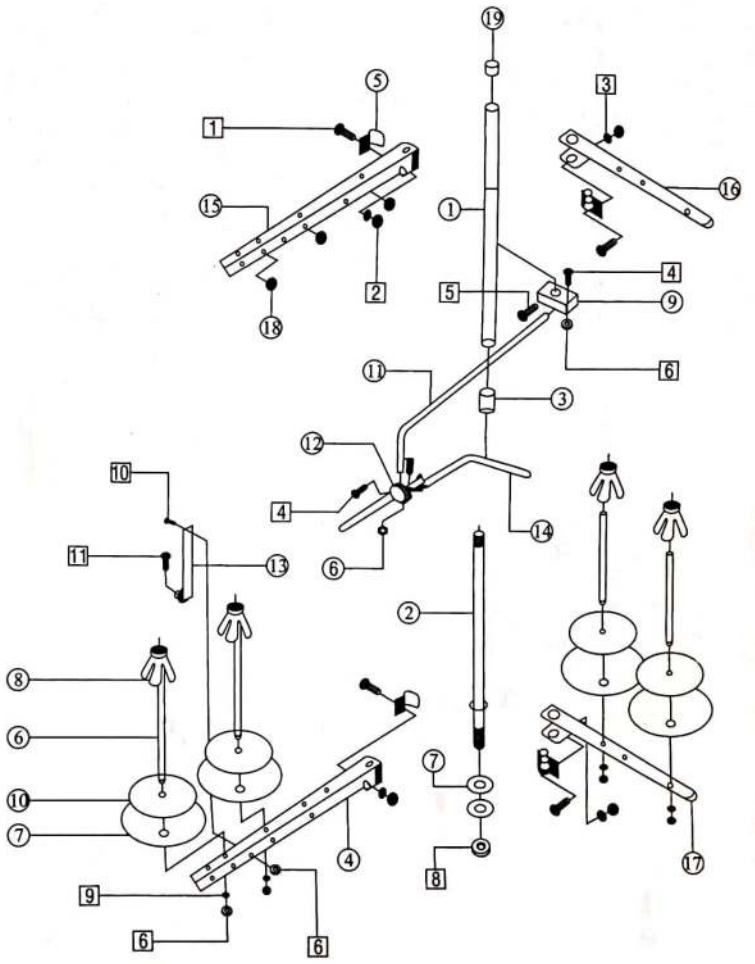

扫描全能王 创建

十八、托盘、排料部分 / Plater row material assemblies

序 号 Ref.No	零件编号 Part No.	名 称	Name	数 量 Amt. Req.		
				3	4	5
1	M18-1	机头托盘	machine head plate	1	1	1
2	M18-2	减震垫组件	head shockproof cusion			
3	M18-3	螺钉M8x55	screw	4	4	4
4	M18-4	托盘螺钉固定头	screw	4	4	4
5	M18-5	大垫圈	pig washer	12	12	12
6	M18-6	托盘连接套	plate doy link bushing	4	4	4
7	M18-7	排料槽座	row material trollgh bracket	1	1	1
8	M18-8	排料槽(1)	row material trough (1)	1	1	1
9	M18-9	排料槽(2)	row material trough (2)	1	1	1
10	M18-10	机头减震垫	head shockproof cushion	1	1	1
1	S076	排料槽座螺钉	row material seat screw	3	3	3
2	W13	排料槽垫圈	row material washer	4	4	4
3	S077	排料槽螺钉	row material screw	4	4	4

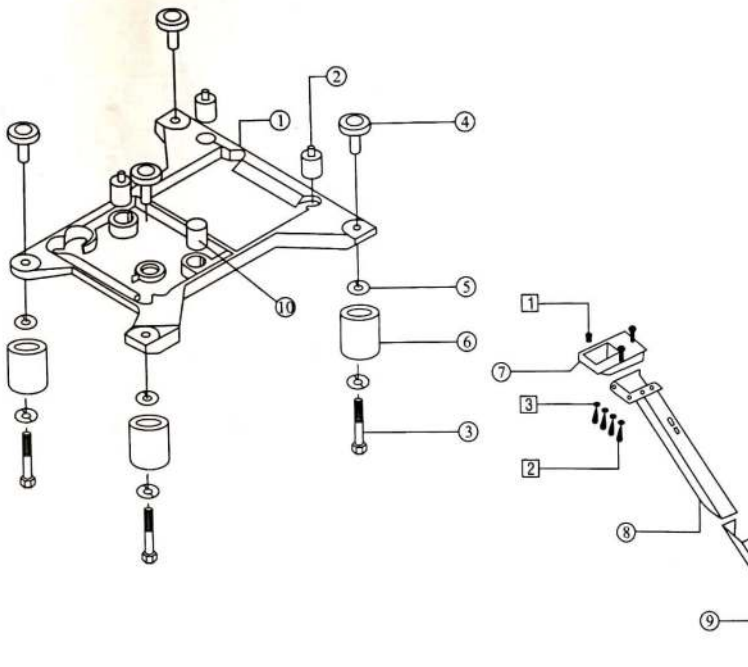

十九、随机附件部分 / Accessories assemblies

序 号 Ref.No	零件编号 Part No.	名 称	Name	数 量 Amt. Req.		
				3	4	5
1	M19-1	机罩	machine head cover	1	1	1
2	M19-2	油壶/1000cc	oil can/100cc	1	1	1
3	M19-3	注油壶	notes oil	1	1	1
4	M19-4	漏斗	tundish	1	1	1
5	M19-5	油壶/50cc	oil can/50cc	1	1	1
6	M19-6	扳手(6mm)	spanner	1	1	1
7	M19-7	扳手(7mm)	spanner	1	1	1
8	M19-8	扳手(8mm)	spanner	1	1	1
9	M19-9	内六角扳手(1.5mm)	cross screw driver	1	1	1
10	M19-10	内六角扳手(2mm)	cross screw driver	1	1	1
11	M19-11	内六角扳手(5mm)	cross screw driver	1	1	1
12	M19-12	内六角扳手(6mm)	cross screw driver	1	1	1
13	M19-13	螺丝刀(小)	screw driver	1	1	1
14	M19-14	螺丝刀(中)	screw driver	1	1	1
15	M19-15	螺丝刀(大)	screw driver	1	1	1
16	M19-16	镊子	tweezer	1	1	1
17	M19-17	金属线	metal guide	1	1	1
18	M19-18	脚踏板	presser foot base	1	1	1
19	M19-19	脚踏板链	presser foot base chain	1	1	1
20	M19-20	附件盒	affach nentbox	1	1	1
21	S009	顶针螺钉	thimble screw	1	1	1
22	DCX27	机针	needle	4	4	4
23	M11-19	下刀	lower knife	1	1	1
24	M13-6	过滤器	oil filter	1	1	1

扫描全能王 创建