# 9820

零件手册
PARTS BOOK

**电脑圆头锁眼机**
ELECTRONIC EYELET BUTTON HOLER

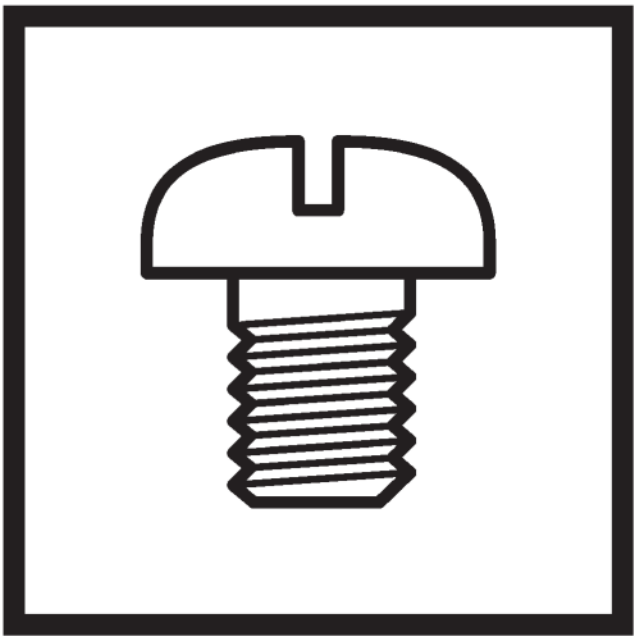

NISEN 尼森

# 型号牌的读解法

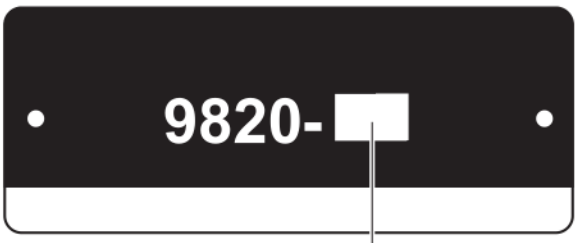


| | 切面线装置 | 切底线装置 | |
|---|---|---|---|
| | | 长型 | 短型 |
| -00 | ○ | — | — |
| -01 | ○ | ○ | — |
| -02 | ○ | — | ○ |

# Description of model plate

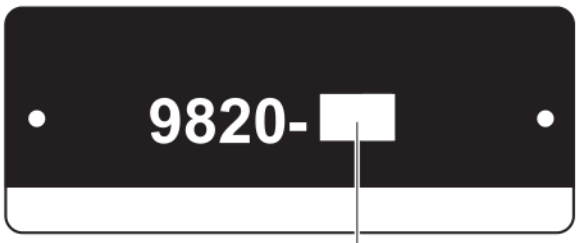


| | Thread trimmer | Lower thread trimmer | |
|---|---|---|---|
| | | Long type | Short type |
| -00 | ○ | — | — |
| -01 | ○ | ○ | — |
| -02 | ○ | — | ○ |

# 零件手册的使用说明

1. 本手册是根据截止至2006年8月的资料为基准而编制的。
2. 零部件设计若有变动，恕不另行通知。
3. 以组件为单位供应的零部件是用虚线框出。

# 目　　录


A. 机体部分 ..... 1
B. 针杆·挑线杆装置 ..... 5
C. 上轴装置 ..... 9
D. 针摆装置 ..... 11
E. 针杆摆动装置 ..... 13
F1. 压脚装置 ..... 15
F2. 压脚装置 ..... 19
F3. 压脚装置 ..... 21
G. 送布装置 ..... 23
H. 切刀装置 ..... 27
J. 下轴装置 ..... 29
K. 弯针装置 ..... 31
L. 双链式弯针装置 ..... 33
M. 分纱装置 ..... 37
N. 供油润滑装置 ..... 39
P1. 穿线装置 ..... 43
P2. 穿线装置 ..... 47
P3. 穿线装置 ..... 49
Q1. 切线装置 ..... 51
Q2. 切线装置 ..... 53
R. 面线剪切装置 ..... 55
S1. 控制箱装置 ..... 57
S2. 控制箱装置（电源马达基板） ..... 59
T. 开关装置 ..... 61
U1. 空压装置 ..... 63
U2. 空压装置 ..... 65
V. 电气部品装置 ..... 67
W. 操作盘装置 ..... 69
X. 马达装置 ..... 71
Y. 踏板开关关系 ..... 73
AA1. 附属装置 ..... 75
AA2. 附属装置 ..... 81
AA3. 附属装置 ..... 83
AA4. 附属装置 ..... 85
AA5. 附属装置 ..... 91
AA6. 附属装置 ..... 95
Z. 附件 ..... 97
Sp. 不同规格零部件一览表 ..... 101
Wa. 警告标签 ..... 104
索引 ..... 105

# Notes for using this parts book

1. This book was prepared based on information available in August 2006.
2. Parts are subject to changes in design without prior notice.
3. Parts supplied as complete assemblies are circled by a dotted line.

## CONTENTS


A. Machine body ..... 1
B. Needle bar and thread take-up mechanism ..... 5
C. Upper shaft mechanism ..... 9
D. Zigzag mechanism ..... 11
E. Needle bar rocking mechanism ..... 13
F1. Presser foot mechanism ..... 15
F2. Presser foot mechanism ..... 19
F3. Presser foot mechanism ..... 21
G. Feed mechanism ..... 23
H. Cutter mechanism ..... 27
J. Lower shaft mechanism ..... 29
K. Looper mechanism ..... 31
L. Double chain stitch looper mechanism ..... 33
M. Spreader mechanism ..... 37
N. Lubrication ..... 39
P1. Threading mechanism ..... 43
P2. Threading mechanism ..... 47
P3. Threading mechanism ..... 49
Q1. Thread trimmer mechanism ..... 51
Q2. Thread trimmer mechanism ..... 53
R. Upper thread trimmer mechanism ..... 55
S1. Control box mechanism ..... 57
S2. Control box mechanism (Power supply motor PCB) ..... 59
T. Power switch mechanism ..... 61
U1. Air pressure mechanism ..... 63
U2. Air pressure mechanism ..... 65
V. Power supply equipment mechanism ..... 67
W. Operation panel mechanism ..... 69
X. Motor mechanism ..... 71
Y. Foot switch pedal mechanism ..... 73
AA1. Attachment set ..... 75
AA2. Attachment set ..... 81
AA3. Attachment set ..... 83
AA4. Attachment set ..... 85
AA5. Attachment set ..... 91
AA6. Attachment set ..... 95
Z. Accessories ..... 97
Sp. Different parts list ..... 101
Wa. Warning labels ..... 104
Index ..... 105

# A . 机体部分 / Machine body

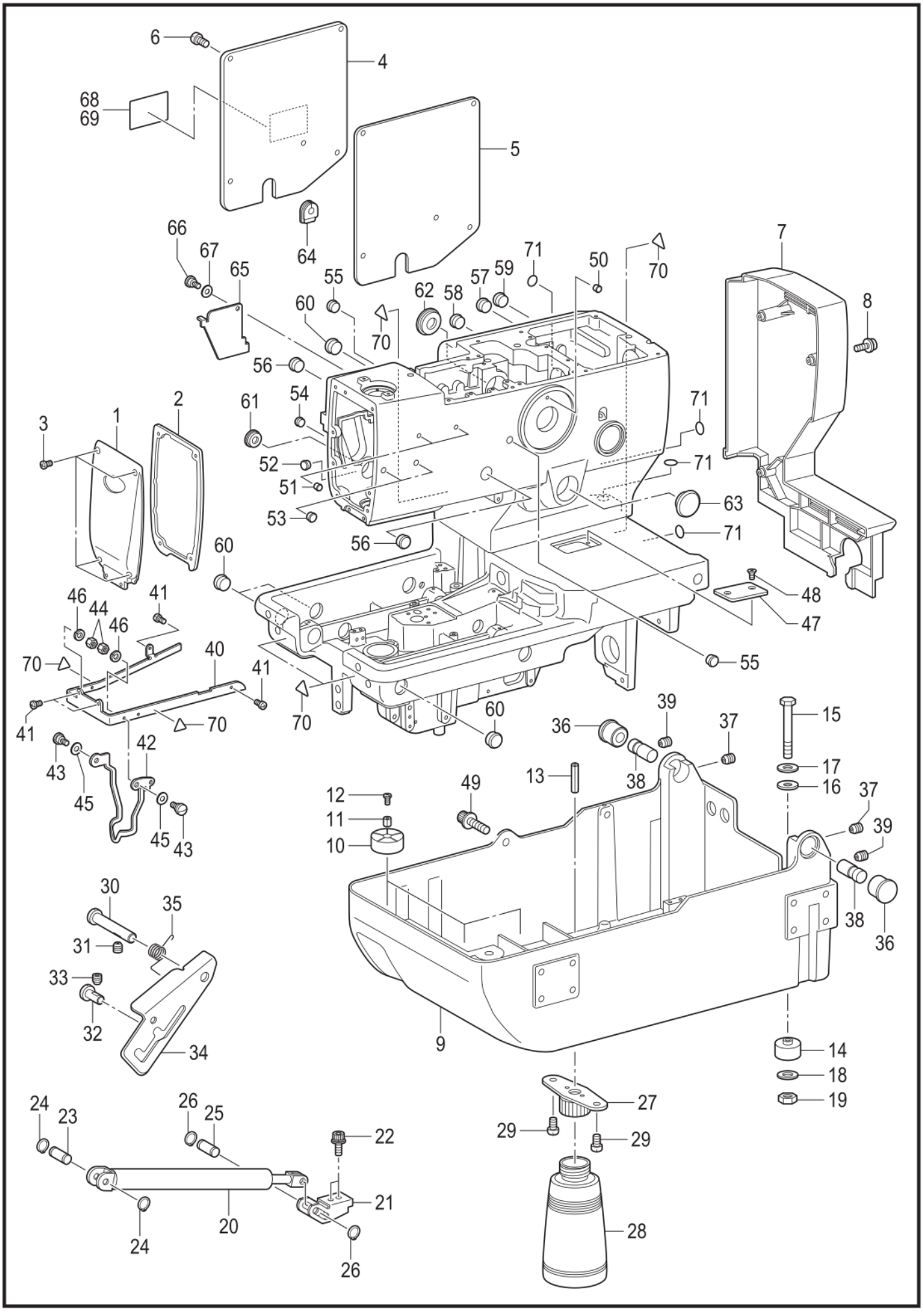


9820-050

## A. 机体部分 / Machine body

| 参照号 | 零部件序号 | 数量 | 零部件名称 | NAME OF PARTS | RM |
|---|---|---|---|---|---|
| 1 | SA5746001 | 1 | 主面板 | MAIN PLATE | |
| 2 | SA5747001 | 1 | 主面板垫片 | MAIN PLATE PACKING | |
| 3 | 062501216 | 4 | 螺钉 M5X12 | SCREW PAN M5X12 | |
| 4 | SA5749001 | 1 | 侧板 | REAR COVER | |
| 5 | SA5750001 | 1 | 侧板垫片 | REAR COVER PACKING | |
| 6 | 062501216 | 5 | 螺钉 M5X12 | SCREW PAN M5X12 | |
| 7 | SA5751001 | 1 | 皮带罩 | BELT COVER | |
| 8 | 0A4401606 | 4 | 螺栓(带垫圈) M4X16DA | SCREW PAN (S/P WASHER) M4X16 | |
| 9 | SA5752201 | 1 | 底板台 | BED BASE | |
| 10 | SA5753001 | 3 | 底座防震垫 | BED BASE CUSHION | |
| 11 | SA7556001 | 3 | 垫块 4X6.5 | SPACER 4X6.5 | |
| 12 | 060401216 | 3 | 螺钉 M4X12 | SCREW BIND M4X12 | |
| 13 | 047502242 | 1 | 弹簧销 AW5 | PIN SPRING ROLL AW5 | |
| 14 | 158827009 | 4 | 底座防震垫 A | BED BASE CUSHION, A | |
| 15 | S21728001 | 4 | 螺栓 M6X80 | BOLT M6X80 | |
| 16 | 159458009 | 4 | 橡皮垫 | RUBBER SHEET | |
| 17 | 115947101 | 4 | 垫圈 6.35 | WASHER PLAIN 6.35 | |
| 18 | 025060336 | 4 | 平垫圈 L6 | WASHER PLAIN L 6 | |
| 19 | 021060106 | 4 | 螺母 M6 | NUT 1 M6 | |
| 20 | SA5754001 | 1 | 缓冲器 | GS SPRING | |
| 21 | SA5763001 | 1 | GS支撑板 | GS SUPPORT PLATE | |
| 22 | S55477001 | 2 | 螺拴(带垫圈) M6X16 | BOLT SOCKET (S/P WASHER)M6X16 | |
| 23 | S35218101 | 1 | GS销 F | SUPPORT PIN, F :GS | |
| 24 | 048080142 | 2 | 轴用挡圈 C8 | RETAINING RING EXTERNAL C8 | |
| 25 | SA5764001 | 1 | GS 支撑轴 | GS SUPPORT SHAFT | |
| 26 | 048080142 | 2 | 轴用挡圈 C8 | RETAINING RING EXTERNAL C8 | |
| 27 | 154465001 | 1 | 废油盖支撑组件 | DUST OILER SUPPORT ASSY | |
| 28 | 114486002 | 1 | 油壶 | OILER | |
| 29 | 062500816 | 2 | 螺钉 M5X8 | SCREW PAN M5X8 | |
| 30 | SA5765101 | 1 | 铰链杆轴 | HINGE LEVER SHAFT | |
| 31 | 014060836 | 1 | 固定螺钉 M6X8 | SET SCREW SOCKET (CP) M6X8 | |
| 32 | SA5766001 | 1 | 铰链支撑轴 | HINGE SUPPORT SHAFT | |
| 33 | 014060836 | 1 | 固定螺钉 M6X8 | SET SCREW SOCKET (CP) M6X8 | |
| 34 | SA5791101 | 1 | 头部支撑手柄 | HEAD SUPPORT LEVER | |
| 35 | SA5792001 | 1 | 弹簧 A | SPRING TWIST A | |
| 36 | SA5802001 | 2 | 铰链 B | HINGE B | |
| 37 | 014060836 | 2 | 固定螺钉 M6X8 | SET SCREW SOCKET (CP) M6X8 | |
| 38 | SA7044001 | 2 | 底板铰链轴 | BED HINGE SHAFT | |
| 39 | 014060836 | 2 | 固定螺钉 M6X8 | SET SCREW SOCKET (CP) M6X8 | |
| 40 | SA5803001 | 1 | 针导向盖 | NEEDLE GUIDE COVER | |
| 41 | 062400816 | 4 | 螺钉 M4X8 | SCREW PAN M4X8 | |
| 42 | SA5804001 | 1 | 护指器 | FINGER GUARD | |
| 43 | S35221101 | 2 | 段螺钉 M4 | SHOULDER SCREW M4 | |
| 44 | 021400206 | 2 | 六角螺母 M4 | NUT 2 M4 | |
| 45 | 107017001 | 2 | 弹簧垫圈 | WAVE WASHER | |
| 46 | 028040246 | 2 | 弹簧垫圈 2-4 | WASHER SPRING 2-4 | |
| 47 | SA5805001 | 1 | 底板盖 | BED COVER | |
| 48 | 004401003 | 2 | 螺钉 M4X10 | SCREW, FLAT M4X10 | |
| 49 | S58636001 | 1 | 螺拴(带垫圈) M8X30 | BOLT SOCKET (S/P WASHER)M8X30 | |
| 50 | 104833001 | 1 | 橡皮塞 4.3 | RUBBER CAP, 4.3 | |
| 51 | 104833001 | 2 | 橡皮塞 4.3 | RUBBER CAP, 4.3 | |
| 52 | S32263001 | 1 | 像皮塞 8.5 | RUBBER CAP, 8.5 | |
| 53 | S32263001 | 2 | 像皮塞 8.5 | RUBBER CAP, 8.5 | |
| 54 | S32263001 | 1 | 像皮塞 8.5 | RUBBER CAP, 8.5 | |
| 55 | 104821001 | 2 | 橡皮塞 10.5 | RUBBER CAP, 10.5 | |
| 56 | 150756000 | 2 | 橡皮塞 18.5 | RUBBER CAP, 18.5 | |
| 57 | 150756000 | 1 | 橡皮塞 18.5 | RUBBER CAP, 18.5 | |
| 58 | 150756000 | 1 | 橡皮塞 18.5 | RUBBER CAP, 18.5 | |
| 59 | 150756000 | 1 | 橡皮塞 18.5 | RUBBER CAP, 18.5 | |
| 60 | 158882001 | 4 | 橡皮塞 22 | RUBBER CAP, 22 | |
| 61 | SA5810001 | 1 | 橡皮塞 23.5 | RUBBER CAP 23.5 | |
| 62 | SA5811001 | 1 | 橡皮塞 38.5 | RUBBER CAP 38.5 | |

# A . 机体部分 / Machine body

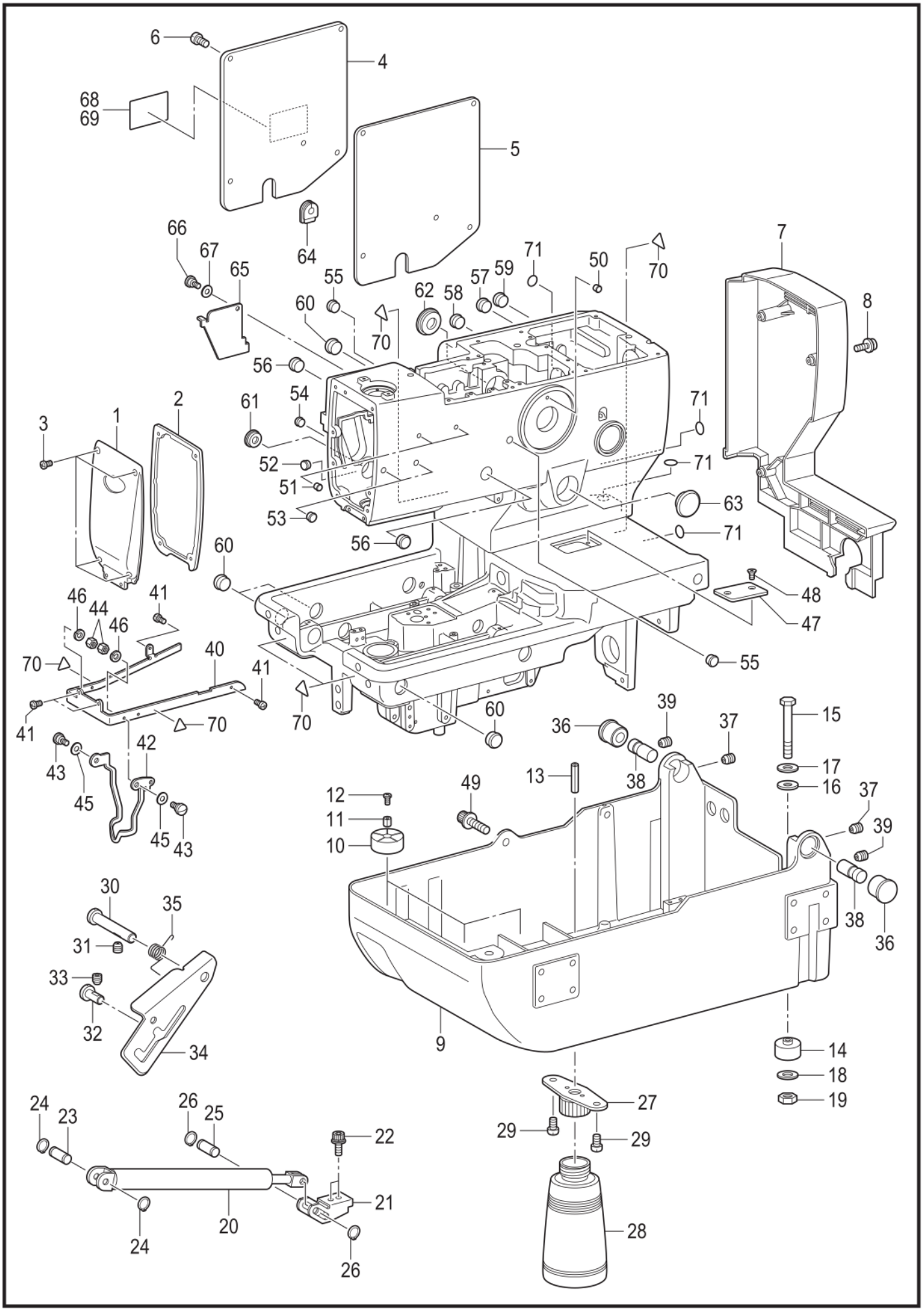


9820-050

## A. 机体部分 / Machine body

| 参照号 | 零部件序号 | 数量 | 零部件名称 | NAME OF PARTS | RM |
|---|---|---|---|---|---|
| 63 | SA5819001 | 1 | 橡皮塞 | RUBBER CAP | |
| 64 | SA5820001 | 1 | 线管 | CORD BUSH | |
| 65 | SA5821001 | 1 | 窗盖 | Z-WINDOW COVER | |
| 66 | S35221101 | 1 | 段螺钉 M4 | SHOULDER SCREW M4 | |
| 67 | 107017001 | 1 | 弹簧垫圈 | WAVE WASHER | |
| | | | ＜用于日本以外＞ | <Except for Japan> | |
| 68 | SA0793001 | 1 | 操作注意标签(中／英) | LABEL, CAUTION CHN/ENG | |
| | | | ＜用于日本＞ | <For Japan only> | |
| 69 | SA0792001 | 1 | 操作注意标签(日／英) | LABEL, CAUTION JPN/ENG | |
| 70 | S36924001 | 6 | 警告标记 | INJURY MARK | |
| 71 | S37060001 | 4 | 接地标记 | LABEL, GROUNDING | |

B . 针杆·挑线杆装置 / Needle bar and thread take-up mechanism

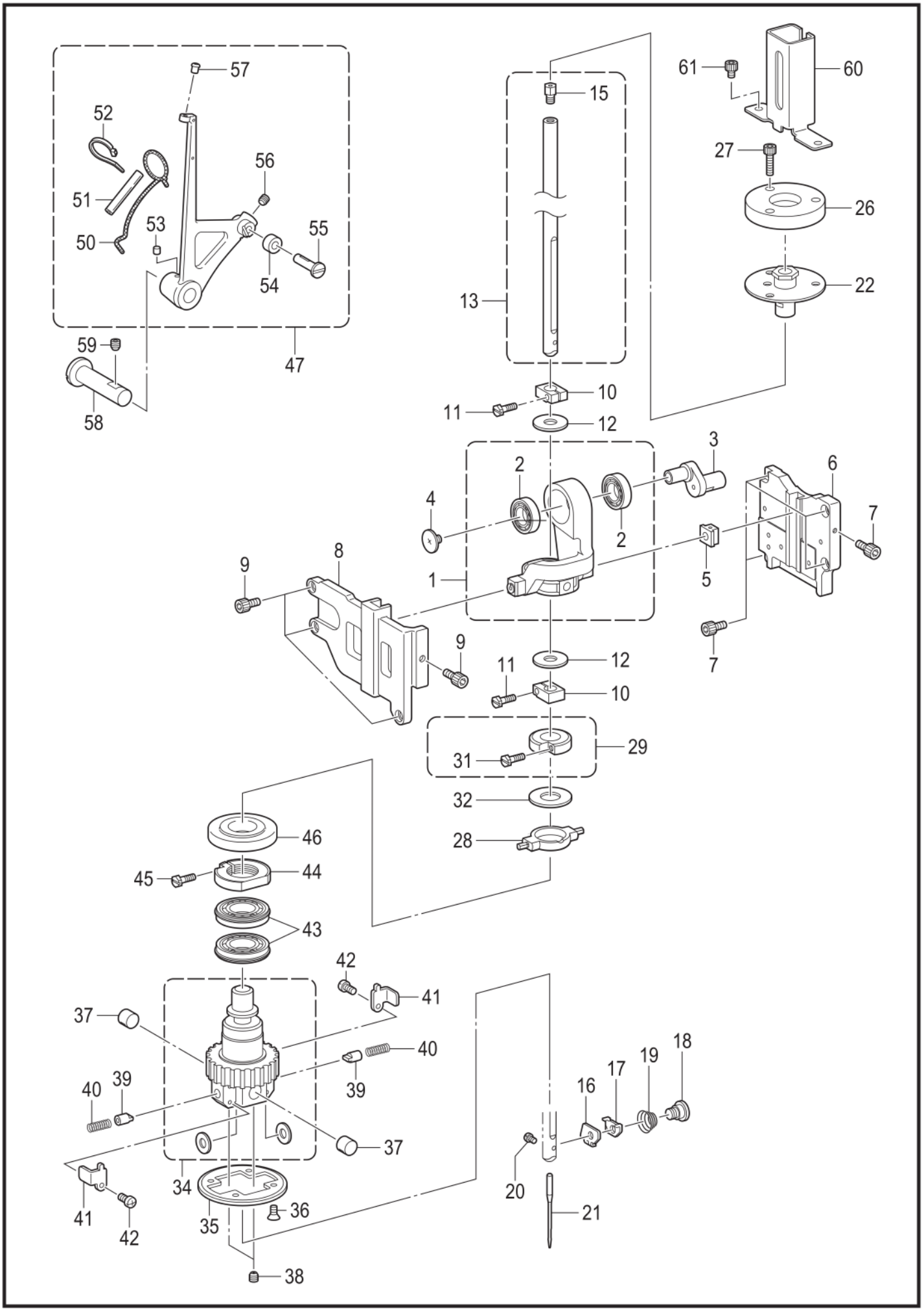


9820-101

## B. 针杆・挑线杆装置 / Needle bar and thread take-up mechanism

| 参照号 | 零部件序号 | 数量 | 零部件名称 | NAME OF PARTS | RM |
|---|---|---|---|---|---|
| 1 | SA5936001 | 1 | 曲柄连杆总组件 | CRANK ROD UNIT | |
| 2 | SA5570001 | 2 | 轴承 608ZZ | BALL BEARING 608ZZ | |
| 3 | SA6652001 | 1 | 针杆曲柄 | NEEDLE BAR CRANK | |
| 4 | 145465001 | 1 | 螺钉 SM3.57-40X6L | SCREW, SM3.57-40X6 L | |
| 5 | SA6653001 | 1 | 滑块 8X10D | SLIDE BLOCK 8X10D | |
| 6 | SA6654101 | 1 | 滑块导向 D | SLIDE BLOCK GUIDE D | |
| 7 | 018401036 | 5 | 螺栓 M4X10 | BOLT SOCKET M4X10 | |
| 8 | SA6655001 | 1 | 滑块导向 F | SLIDE BLOCK GUIDE F | |
| 9 | 018401036 | 4 | 螺栓 M4X10 | BOLT SOCKET M4X10 | |
| 10 | S35332001 | 2 | 针杆抱箍 | NEEDLE BAR CLAMP | |
| 11 | S59242001 | 2 | 固定螺钉 | NEEDLE BAR BRACKET SCREW | |
| 12 | SA6656001 | 2 | 垫圈 8X21X1.5 | WASHER 8X21X1.5 | |
| 13 | SA6657001 | 1 | 针杆组件 L | NEEDLE BAR ASSY L | |
| 15 | SA6659001 | 1 | 针杆线口 S | NEEDLE BAR YARN FEEDER S | |
| 16 | S41310101 | 1 | 线导向 A | NEEDLE GUIDE, A | |
| 17 | S41251101 | 1 | 压线板 A | NEEDLE THREAD HOLDER PLATE, A | |
| 18 | 141514002 | 1 | 段螺钉 SM3.18 | SHOULDER SCREW, SM3.18 | |
| 19 | S35118101 | 1 | 调整弹簧 | TENSION SPRING | |
| 20 | 140553102 | 1 | 固定螺钉 SM3.18 | SET SCREW, SM3.18 | |
| | | | <用于-00> | <For -00> | |
| 21 | SA4857016 | 1 | 机针 DOX558-NY2 (#16) | NEEDLE, DO x 558-NY2 (#16) | |
| | | | <用于-01> | <For -01> | |
| 21 | SA4857014 | 1 | 机针 DOX558-NY2 (#14) | NEEDLE, DO x 558-NY2 (#14) | |
| | | | <用于-02> | <For -02> | |
| 21 | SA4857018 | 1 | 机针 DOX558-NY2 (#18) | NEEDLE, DO x 558-NY2 (#18) | |
| | | | <用于-00> | <For -00> | |
| 21 | S35133016 | 1 | 机针 DOX558 (#16) | NEEDLE, DO x 558 (#16) | |
| | | | <用于-01> | <For -01> | |
| 21 | S35133014 | 1 | 机针 DOX558 (#14) | NEEDLE, DO x 558 (#14) | |
| | | | <用于-02> | <For -02> | |
| 21 | S35133018 | 1 | 机针 DOX558 (#18) | NEEDLE, DO x 558 (#18) | |
| 22 | SA5830001 | 1 | 针杆轴套组件 U | NEEDLE BAR BUSH U ASSY | |
| 26 | SA5833001 | 1 | 针杆轴套支撑基座 C | NEEDLE BAR BUSH HOLDER BASE C | |
| 27 | 018402036 | 3 | 螺栓 M4X20 | BOLT SOCKET M4X20 | |
| 28 | SA5834001 | 1 | 针摆水平连杆 | ZIGZAG HORIZON LINK | |
| 29 | SA5835001 | 1 | 针杆支架组件 | NEEDLE BAR BLOCK BRACKET ASSY | |
| 31 | S59242001 | 1 | 固定螺钉 | NEEDLE BAR BRACKET SCREW | |
| 32 | S35113001 | 1 | 针杆管套 | NEEDLE BAR BLOCK COLLAR | |
| 34 | SA5837001 | 1 | 针杆齿轮基座组件 | NEEDLE BAR GUAND BLOCK ASSY | |
| 35 | SA7609001 | 1 | 手轮法兰 | PULLEY FLANGE | |
| 36 | S06696004 | 4 | 螺钉 M3X6 | SCREW, FLAT M3X6 | |
| 37 | SA5907001 | 2 | 针杆导向管套 | NEEDLE BAR GUIDE COLLAR | |
| 38 | 014400532 | 2 | 螺钉 M4X5 | SET SCREW SOCKET (CP) M4X5 | |
| 39 | S35137001 | 2 | 针杆导向 | NEEDLE BAR GUIDE | |
| 40 | S35136001 | 2 | 弹簧 | NEEDLE BAR GUIDE SPRING | |
| 41 | SA5908001 | 2 | 针杆导向支撑板 | NEEDLE BAR GUIDE SUPPORT PLATE | |
| 42 | 062300616 | 2 | 螺钉 M3X6 | SCREW PAN M3X6 | |
| 43 | SA5919001 | 2 | 轴承 6805ZZNR | BALL BEARING 6805ZZNR | |
| 44 | SA5920001 | 1 | 针杆齿轮螺母 | NEEDLE BAR GUARD NUT | |
| 45 | S59242001 | 1 | 固定螺钉 | NEEDLE BAR BRACKET SCREW | |
| 46 | SA5923001 | 1 | 齿轮螺母盖 | GEAR NUT COVER | |
| 47 | SA7531001 | 1 | 跳线杆总组件 | THREAD TAKE-UP LEVER UNIT | |
| 50 | SA5843001 | 1 | 油线 2X2 | WICK 2X2 | |
| 51 | SA5849001 | 1 | 油管 | OIL TUBE | |
| 52 | 228475000 | 1 | 电线夹 1.9X80 | FASTENING BAND 1.9X80 | |
| 53 | S25328001 | 1 | 油毡 | FELT | |
| 54 | SA5850001 | 1 | 滚轮 | ROLLER | |
| 55 | SA5865001 | 1 | 滚轮轴 | ROLLER SHAFT | |
| 56 | 012500536 | 1 | 螺钉 M5X5 | SET SCREW SOCKET (FT) M5X5 | |
| 57 | SA5842001 | 1 | 线导向 | THREAD GUIDE | |

B . 针杆·挑线杆装置 / Needle bar and thread take-up mechanism

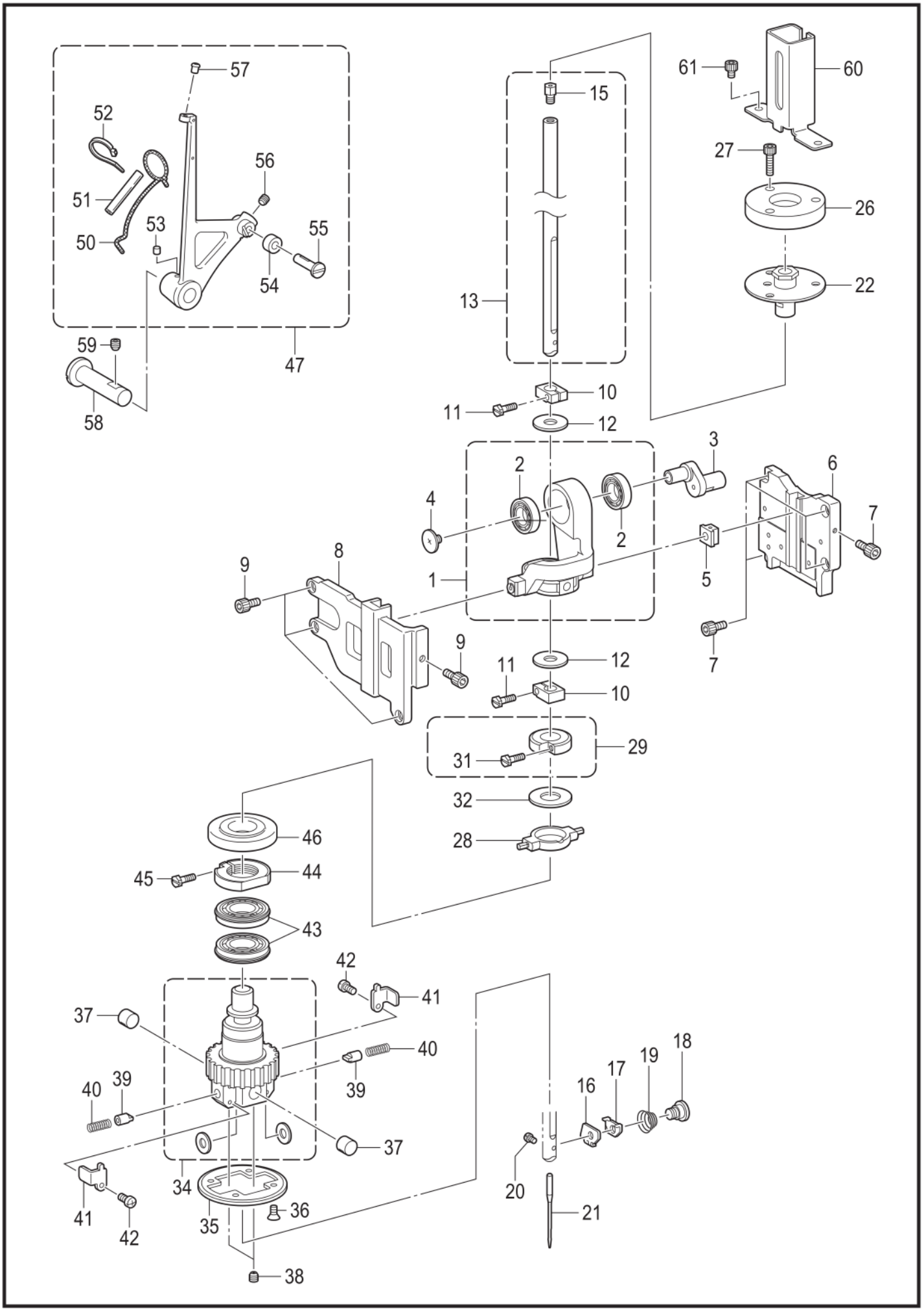


9820-101

## B. 针杆・挑线杆装置 / Needle bar and thread take-up mechanism

| 参照号 | 零部件序号 | 数量 | 零部件名称 | NAME OF PARTS | RM |
|---|---|---|---|---|---|
| 58 | SA5880001 | 1 | 跳线杆支撑轴 | THREAD TAKE-UP L SUPPORT SHAFT | |
| 59 | 014060636 | 1 | 固定螺钉 M6X6 | SET SCREW SOCKET (CP) M6X6 | |
| 60 | SA5889001 | 1 | 针杆护架 | NEEDLE BAR GUARD | |
| 61 | 018400636 | 2 | 螺栓 M4X6 | BOLT SOCKET M4X6 | |

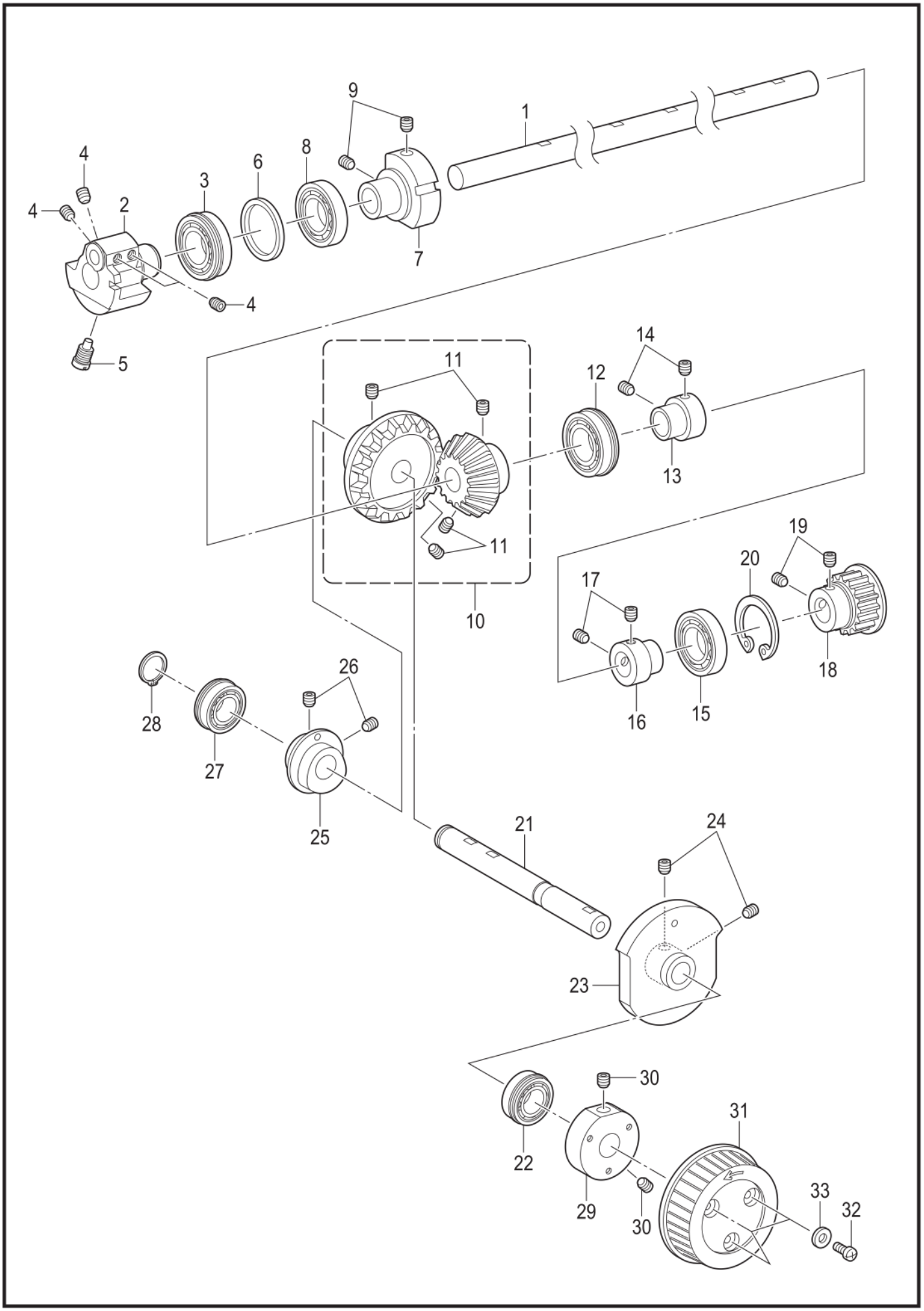
1
2
3
4
4
4
5
6
7
8
9
10
11
11
12
13
14
15
16
17
18
19
20
21
22
23
24
25
26
27
28
29
30
30
31
32
33

9820-109

## C. 上轴装置 / Upper shaft mechanism

| 参照号 | 零部件序号 | 数量 | 零部件名称 | NAME OF PARTS | RM |
|---|---|---|---|---|---|
| 1 | SA5890001 | 1 | 上轴 | UPPER SHAFT | |
| 2 | SA5893001 | 1 | 上轴曲柄 | UPPER SHAFT CRANK | |
| 3 | SA5571001 | 1 | 轴承 6004ZZNR | BALL BEARING 6004ZZNR | |
| 4 | S23651001 | 4 | 固定螺钉 M6X6 | SET SCREW SOCKET (FT) M6X6 | |
| 5 | S25235001 | 1 | 螺钉 M8 | SCREW M8 | |
| 6 | SA5897001 | 1 | 垫圈 34X42 | SPACER 34X42 | |
| 7 | SA6661001 | 1 | 平衡管套 | BALANCE COLLAR | |
| 8 | SA5572001 | 1 | 轴承 6004ZZ | BALL BEARING 6004ZZ | |
| 9 | S23651001 | 2 | 固定螺钉 M6X6 | SET SCREW SOCKET (FT) M6X6 | |
| 10 | SA6662001 | 1 | 伞齿轮组件 | HYPOID GEAR ASSY | |
| 11 | S23651001 | 4 | 固定螺钉 M6X6 | SET SCREW SOCKET (FT) M6X6 | |
| 12 | SA5573001 | 1 | 轴承 6204ZZNR | BALL BEARING 6204ZZNR | |
| 13 | SA5564001 | 1 | 轴承管套 | BEARING COLLAR | |
| 14 | S23651001 | 2 | 固定螺钉 M6X6 | SET SCREW SOCKET (FT) M6X6 | |
| 15 | SA6667001 | 1 | 轴承 6304ZZ | BALL BEARING 6304ZZ | |
| 16 | SA5564001 | 1 | 轴承管套 | BEARING COLLAR | |
| 17 | S23651001 | 2 | 固定螺钉 M6X6 | SET SCREW SOCKET (FT) M6X6 | |
| 18 | SA5549001 | 1 | 同步手轮组件 | TIMING PULLEY ASSY | |
| 19 | S23651001 | 2 | 固定螺钉 M6X6 | SET SCREW SOCKET (FT) M6X6 | |
| 20 | 048520242 | 1 | 孔用挡圈 C52 | RETAINING RING INTERNAL C52 | |
| 21 | SA6668001 | 1 | 轴 | ORTHOGONAL SHAFT | |
| 22 | SA6669001 | 1 | 轴承 6202DDUNR | BALL BEARING 6202DDUNR | |
| 23 | SA6671001 | 1 | 挑线杆凸轮 | CAM ROLLER TAKE-UP | |
| 24 | S23651001 | 2 | 固定螺钉 M6X6 | SET SCREW SOCKET (FT) M6X6 | |
| 25 | SA6673001 | 1 | 针摆凸轮 | ZIGZAG CAM | |
| 26 | S23651001 | 2 | 固定螺钉 M6X6 | SET SCREW SOCKET (FT) M6X6 | |
| 27 | SA6674001 | 1 | 轴承 6002ZZNR | BALL BEARING 6002ZZNR | |
| 28 | 048150142 | 1 | 轴用挡圈 C15 | RETAINING RING EXTERNAL C15 | |
| 29 | SA4629001 | 1 | 上轮基座 | PULLEY BASE | |
| 30 | S23651001 | 2 | 固定螺钉 M6X6 | SET SCREW SOCKET (FT) M6X6 | |
| 31 | SA6676001 | 1 | 手轮 | PULLEY | |
| 32 | 062401016 | 3 | 螺钉 M4X10 | SCREW PAN M4X10 | |
| 33 | SA5158101 | 3 | 垫圈 L4 | WASHER PLAIN L 4 | |

D . 针摆装置 / Zigzag mechanism

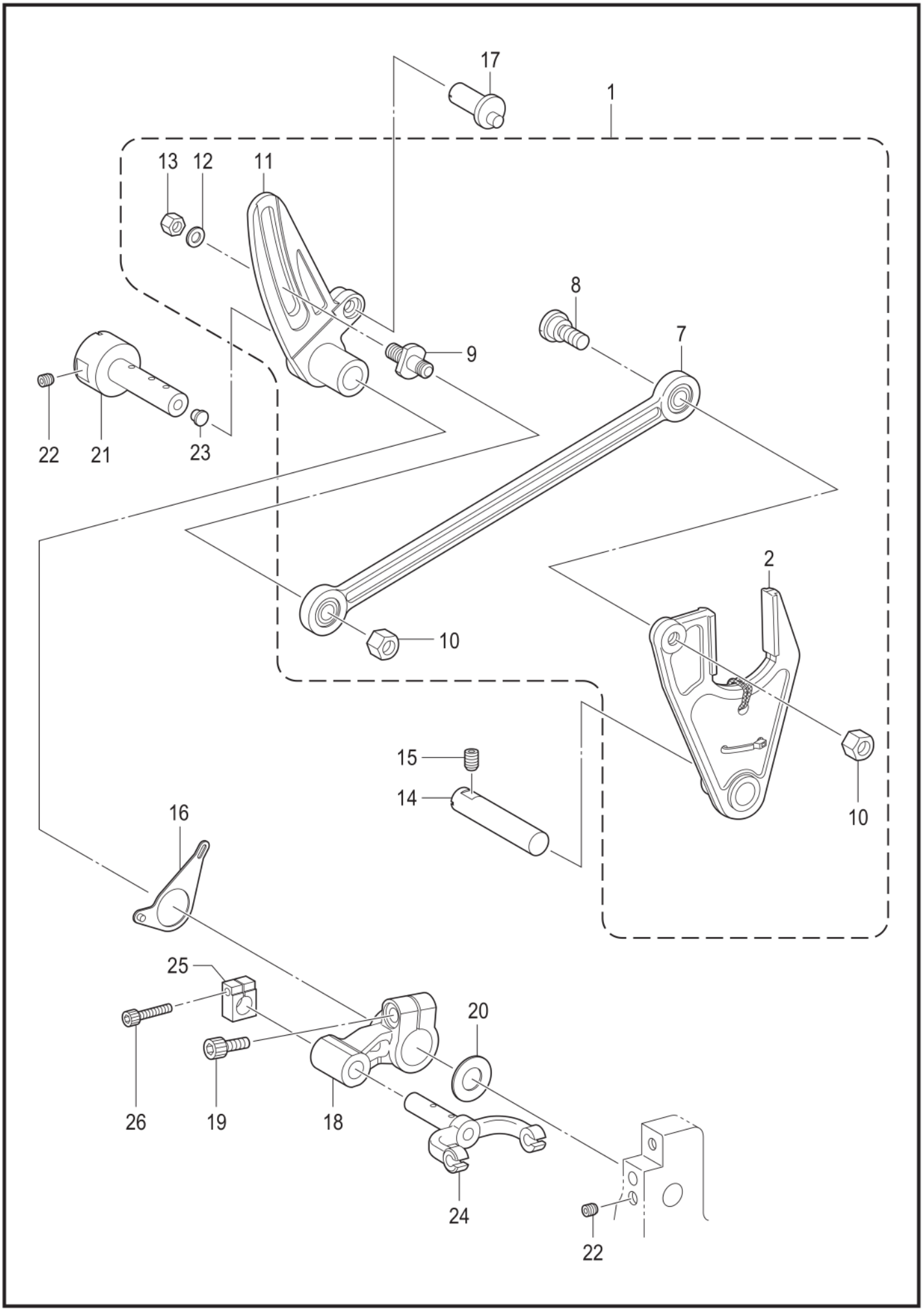


9820-110

## D. 针摆装置 / Zigzag mechanism

| 参照号 | 零部件序号 | 数量 | 零部件名称 | NAME OF PARTS | RM |
|---|---|---|---|---|---|
| 1 | SA6677001 | 1 | 针摆复合件 | ZIGZAG UNIT | |
| 2 | SA6678001 | 1 | 针摆叉组件 | ZIGZAG FORK ASSY | |
| 7 | SA6682001 | 1 | 针摆连杆组件 | ZIGZAG CONNECTING ROD ASSY | |
| 8 | SA6684001 | 1 | 段螺钉 **M6** | SHOULDER SCREW M6 | |
| 9 | SA6685001 | 1 | 双头螺栓 | ZIGZAG CRANK SCREW | |
| 10 | 021060106 | 2 | 螺母 **M6** | NUT 1 M6 | |
| 11 | SA6686001 | 1 | 针摆曲柄 | ZIGZAG CRANK | |
| 12 | 155559001 | 1 | 平垫圈 | WASHER PLAIN | |
| 13 | S35251101 | 1 | 螺母 **M6** | NUT M6 | |
| 14 | SA6687001 | 1 | 针摆叉轴 | ZIGZAG FORK SUPPORT SHAFT | |
| 15 | 012061036 | 1 | 螺钉 **M6X10** | SET SCREW SOCKET (FT) M6X10 | |
| 16 | SA6688001 | 1 | 针位调整板组件 | N-POSITION CONTROL PLATE ASSY | |
| 17 | S35252001 | 1 | 针摆偏心销 | Z-ECCENTRIC PIN | |
| 18 | SA6691001 | 1 | 针摆驱动杆 | ZIGZAG DRIVING LEVER | |
| 19 | 018061636 | 1 | 螺栓 **M6X16** | BOLT SOCKET M6X16 | |
| 20 | SA6692001 | 1 | 垫圈 | SPACER | |
| 21 | SA6693001 | 1 | 针摆动轴 | ZIGZAG COAXIAL ROCK SHAFT | |
| 22 | 012500536 | 2 | 螺钉 **M5X5** | SET SCREW SOCKET (FT) M5X5 | |
| 23 | 156482000 | 1 | 橡皮塞 **4** | CAP, 4 | |
| 24 | SA6694001 | 1 | 针摆臂 | ZIGZAG LEVER | |
| 25 | S35332001 | 1 | 针杆抱箍 | NEEDLE BAR CLAMP | |
| 26 | 018301236 | 1 | 螺栓 **M3X12** | BOLT SOCKET M3X12 | |

E . 针杆摆动装置 / Needle bar rocking mechanism

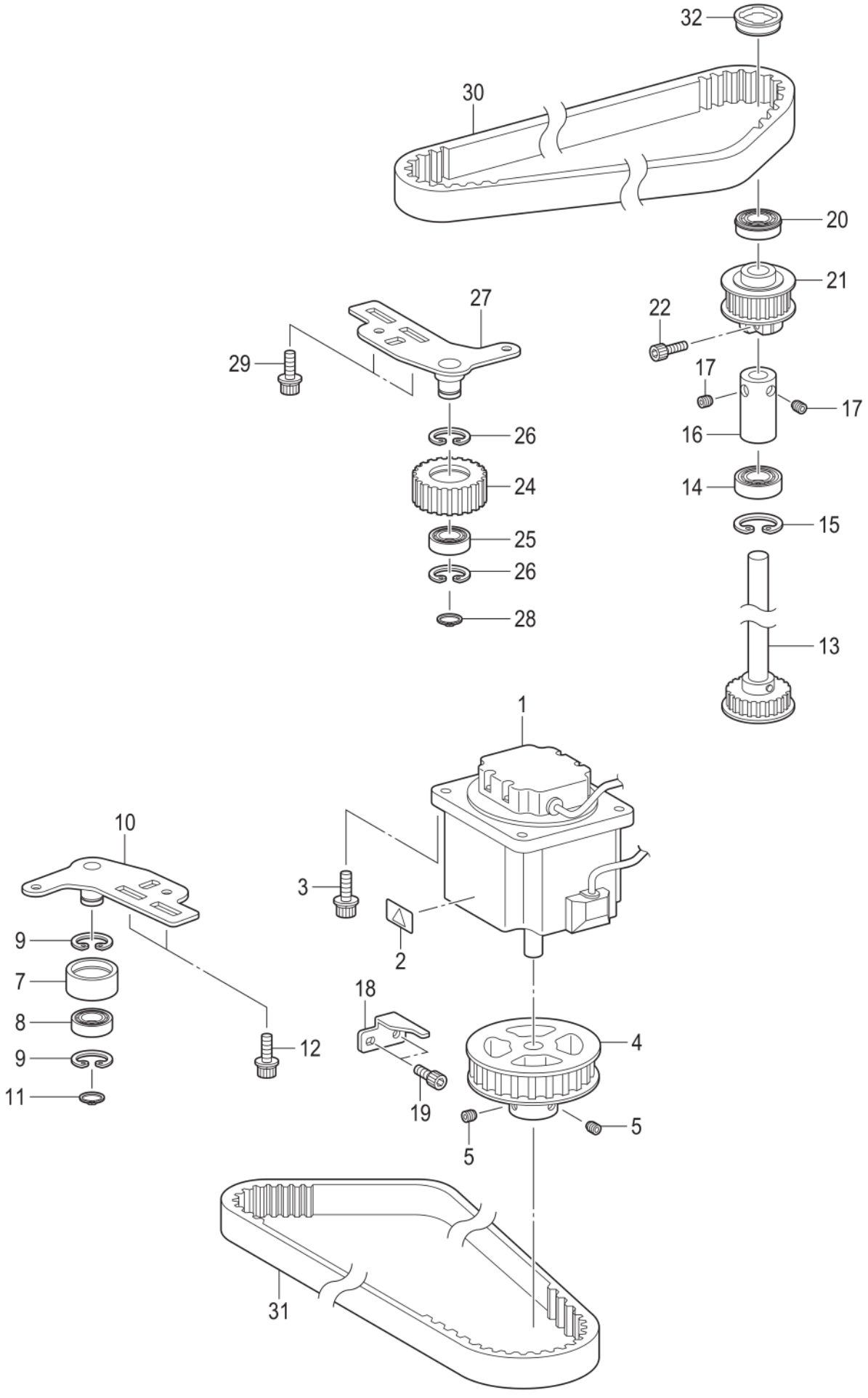


9820-115

## E. 针杆摆动装置 / Needle bar rocking mechanism

| 参照号 | 零部件序号 | 数量 | 零部件名称 | NAME OF PARTS | RM |
|---|---|---|---|---|---|
| 1 | SA6542001 | 1 | 脉冲马达组件 R | PULSE MOTOR ASSY R | |
| 2 | J03663001 | 1 | 高温标签 13X20 | LABEL, HIGH TEMP. 13X20 | |
| 3 | S55487001 | 4 | 螺拴(带垫圈) 5X16 | BOLT SOCKET (S/P WASHER)M5X16 | |
| 4 | SA6695001 | 1 | 送布轮组件 M | THETA M PULLEY ASSY | |
| 5 | 012060636 | 2 | 螺钉 M6X6 | SET SCREW SOCKET (FT) M6X6 | |
| 7 | S35284101 | 1 | 张力轮 | TENSION PULLEY | |
| 8 | SA5574001 | 1 | 轴承 6000ZZ | BALL BEARING 6000ZZ | |
| 9 | 048260242 | 2 | 孔用挡圈 C26 | RETAINING RING INTERNAL C26 | |
| 10 | SA5552001 | 1 | 支架组件 | T PULLEY HOLDER ASSY | |
| 11 | 048100142 | 1 | 轴用挡圈 C10 | RETAINING RING EXTERNAL C10 | |
| 12 | S55481001 | 2 | 螺拴(带垫圈) M4X12 | BOLT SOCKET (S/P WASHER)M4X12 | |
| 13 | SA6699001 | 1 | 弯针移动轴组件 | DRIVING LOOPER SHAFT ASSY | |
| 14 | SA6702001 | 1 | 轴承 6201ZZ | BALL BEARING 6201ZZ | |
| 15 | 048320242 | 1 | 孔用挡圈 C32 | RETAINING RING INTERNAL C32 | |
| 16 | SA6703001 | 1 | 紧圈 | SET SCREW COLLAR | |
| 17 | 012060636 | 2 | 螺钉 M6X6 | SET SCREW SOCKET (FT) M6X6 | |
| 18 | SA6704001 | 1 | 马达定位 | MOTOR STOPPER | |
| 19 | 018061236 | 2 | 螺栓 M6X12 | BOLT SOCKET M6X12 | |
| 20 | SA6705001 | 1 | 轴承 6001ZZNR | BALL BEARING 6001ZZNR | |
| 21 | SA6707001 | 1 | 竖轴张力轮组件 U | V-PULLEY T-PULLEY U ASSY | |
| 22 | 018401636 | 1 | 螺栓 M4X16 | BOLT SOCKET M4X16 | |
| 24 | SA6711001 | 1 | 张力轮 U | TENSION PULLEY U | |
| 25 | SA5574001 | 1 | 轴承 6000ZZ | BALL BEARING 6000ZZ | |
| 26 | 048260242 | 2 | 孔用挡圈 C26 | RETAINING RING INTERNAL C26 | |
| 27 | SA5552001 | 1 | 支架组件 | T PULLEY HOLDER ASSY | |
| 28 | 048100142 | 1 | 轴用挡圈 C10 | RETAINING RING EXTERNAL C10 | |
| 29 | S55481001 | 2 | 螺拴(带垫圈) M4X12 | BOLT SOCKET (S/P WASHER)M4X12 | |
| 30 | SA6712001 | 1 | T皮带 580-5GT | T BELT 580-5GT | |
| 31 | SA6713001 | 1 | T皮带 810-5GT | T BELT 810-5GT | |
| 32 | SA6714001 | 1 | 橡皮塞 32.5 | RUBBER CAP 32.5 | |

# F1 . 压脚装置 / Presser foot mechanism

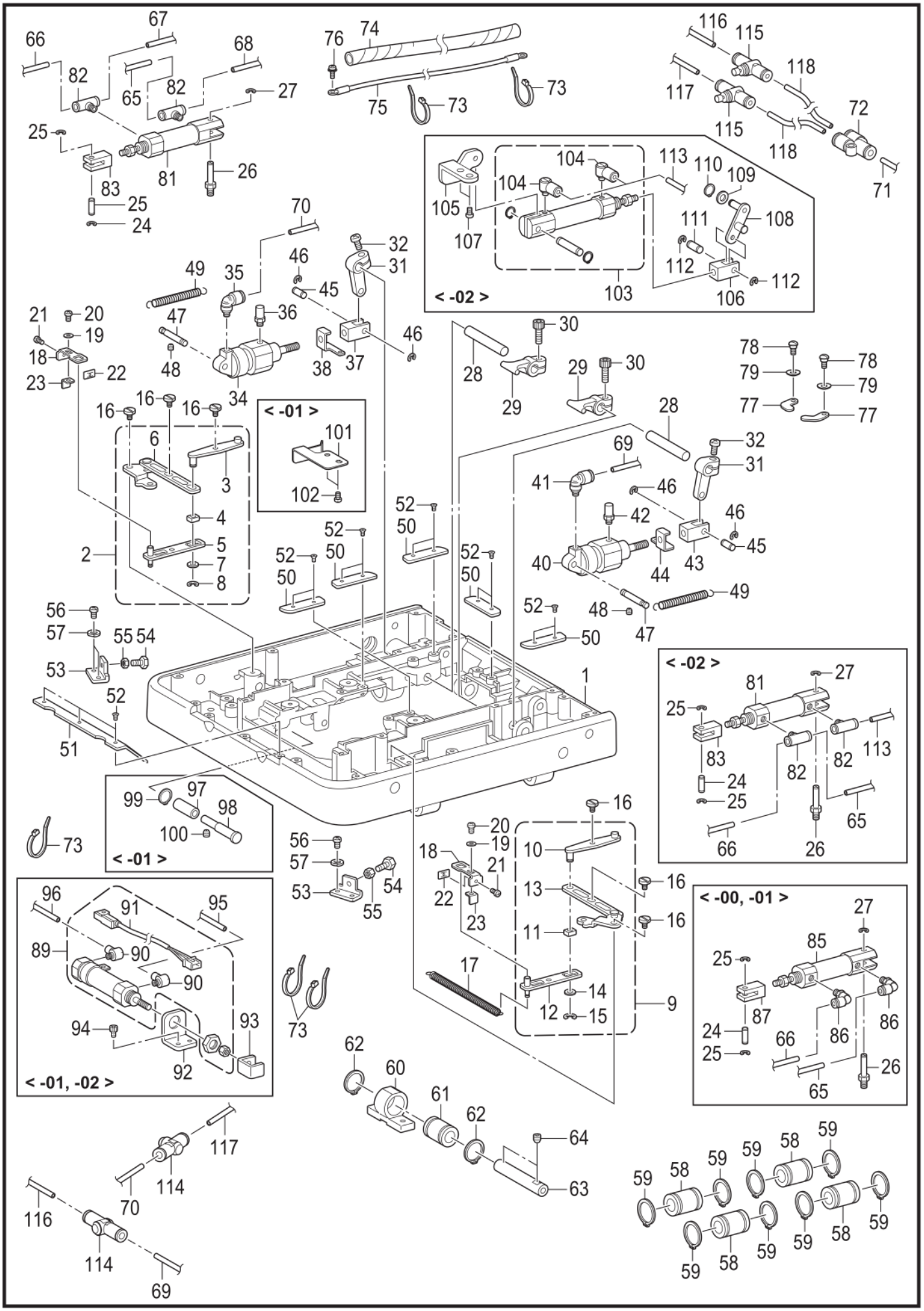


9820-201

## F1. 压脚装置 / Presser foot mechanism

| 参照号 | 零部件序号 | 数量 | 零部件名称 | NAME OF PARTS | RM |
|---|---|---|---|---|---|
| | | | <用于-00、-01和-02> | <For -00, -01 & -02> | |
| 1 | SA5690001 | 1 | 送布台 | FEED BAR | |
| 2 | SA5677001 | 1 | 打开连杆组件 L | OPENING CONNECTING ROD ASSY L | |
| 3 | SA7176001 | 1 | 支点杆板 | FULCRUM LEVER PLATE | |
| 4 | 102630001 | 1 | 针杆接头滑块 | NEEDLE BAR GUIDE SLIDE BLOCK | |
| 5 | SA5557001 | 1 | 摇动杆 | ROCKER LEVER | |
| 6 | SA5579001 | 1 | 打开驱动杆组件 L | OPENING DRIVING LEVER ASSY L | |
| 7 | 109763002 | 1 | 垫圈 | WASHER | |
| 8 | 048050342 | 1 | 挡圈 E5 | RETAINING RING E5 | |
| 9 | SA5678001 | 1 | 打开连杆组件 R | OPENING CONNECTING ROD ASSY R | |
| 10 | SA7176001 | 1 | 支点杆板 | FULCRUM LEVER PLATE | |
| 11 | 102630001 | 1 | 针杆接头滑块 | NEEDLE BAR GUIDE SLIDE BLOCK | |
| 12 | SA5557001 | 1 | 摇动杆 | ROCKER LEVER | |
| 13 | SA5578001 | 1 | 打开驱动杆组件 R | OPENING DRIVING LEVER ASSY R | |
| 14 | 109763002 | 1 | 垫圈 | WASHER | |
| 15 | 048050342 | 1 | 挡圈 E5 | RETAINING RING E5 | |
| 16 | SA7527001 | 6 | 段螺钉 M5 | SHOULDER SCREW M5 | |
| 17 | S35429101 | 1 | 弹簧 | EXTENSION SPRING | |
| 18 | SA5583001 | 2 | 定位板 | STOPPER PLATE OPENING | |
| 19 | 026040236 | 2 | 平垫圈 M4 | WASHER PLAIN M 4 | |
| 20 | 062400816 | 2 | 螺钉 M4X8 | SCREW PAN M4X8 | |
| 21 | 062301016 | 2 | 螺钉 M3X10 | SCREW PAN M3X10 | |
| 22 | S34968000 | 2 | 螺母 M3 | SPEED NUT M3 | |
| 23 | S35328001 | 2 | 定位板 | STOPPER PLATE | |
| 24 | S34969001 | 2 | 气缸连杆销 B | ROD PIN, B :CYLINDER | |
| 25 | 048030342 | 4 | 挡圈 E3 | RETAINING RING E3 | |
| 26 | SA5584001 | 2 | 气缸螺栓 | CYLINDER SCREW | |
| 27 | 048050142 | 2 | 轴用挡圈 C5 | RETAINING RING EXTERNAL C5 | |
| 28 | S35239101 | 2 | 压脚杆轴 | CLAMP LEVER SHAFT | |
| 29 | S35240001 | 2 | 压脚杆 B | CLAMP LEVER, B | |
| 30 | 018501236 | 2 | 螺栓 M5X12 | BOLT SOCKET M5X12 | |
| 31 | SA5582001 | 2 | 压脚驱动杆 | CLAMP DRIVING LEVER | |
| 32 | 062501202 | 2 | 螺钉 M5X12 | SCREW PAN M5X12 | |
| 34 | S35350000 | 1 | 气缸 16X10 | CYLINDER 16X10 | |
| 35 | S53488000 | 1 | 接头 | JOINT | |
| 36 | S13955000 | 1 | 消音器 | AIR BOLSTER | |
| 37 | SA5558001 | 1 | 气缸连杆 | CLAMP CYLINDER ROD | |
| 38 | S35457001 | 1 | 弹簧挂钩 L | SPRING HOOK, L | |
| 40 | S35350000 | 1 | 气缸 16X10 | CYLINDER 16X10 | |
| 41 | S53488000 | 1 | 接头 | JOINT | |
| 42 | S13955000 | 1 | 消音器 | AIR BOLSTER | |
| 43 | SA5558001 | 1 | 气缸连杆 | CLAMP CYLINDER ROD | |
| 44 | S35458001 | 1 | 弹簧挂钩 R | SPRING HOOK, R | |
| 45 | S35305001 | 2 | 气缸连杆销 | CYLINDER ROD PIN | |
| 46 | 048030342 | 4 | 挡圈 E3 | RETAINING RING E3 | |
| 47 | S35304001 | 2 | 气缸支架杆 | CLAMP CYLINDER SUPPORT | |
| 48 | 014400532 | 2 | 螺钉 M4X5 | SET SCREW SOCKET (CP) M4X5 | |
| 49 | S35456101 | 2 | 弹簧 | SPRING | |
| 50 | SA5675001 | 5 | 导向板 A | GUIDE PLATE A | |
| 51 | SA5676001 | 1 | 导向板 B | GUIDE PLATE B | |
| 52 | S06696004 | 13 | 螺钉 M3X6 | SCREW, FLAT M3X6 | |
| 53 | S35327001 | 2 | 气缸定位 | OPENING CYLINDER STOPPER | |
| 54 | 017401616 | 2 | 螺栓 M4X16 | BOLT M4X16 | |
| 55 | 021400202 | 2 | 六角螺母 M4 | NUT 2 M4 | |
| 56 | 062400816 | 4 | 螺钉 M4X8 | SCREW PAN M4X8 | |
| 57 | 028040242 | 4 | 弹簧垫圈 2-4 | WASHER SPRING 2-4 | |
| 58 | S12004000 | 4 | 线性轴套 | LINEAR BUSH | |
| 59 | S02460001 | 8 | 轴用挡圈 C19 | RETAINING RING, EXTERNAL C19 | |
| 60 | SA5692001 | 1 | Y轴支座 | Y BEARING | |
| 61 | S12004000 | 1 | 线性轴套 | LINEAR BUSH | |
| 62 | S02460001 | 2 | 轴用挡圈 C19 | RETAINING RING, EXTERNAL C19 | |
| 63 | SA5691001 | 1 | Y导向轴 | Y GUIDE SHAFT | |
| 64 | 012500536 | 2 | 螺钉 M5X5 | SET SCREW SOCKET (FT) M5X5 | |

# F1 . 压脚装置 / Presser foot mechanism

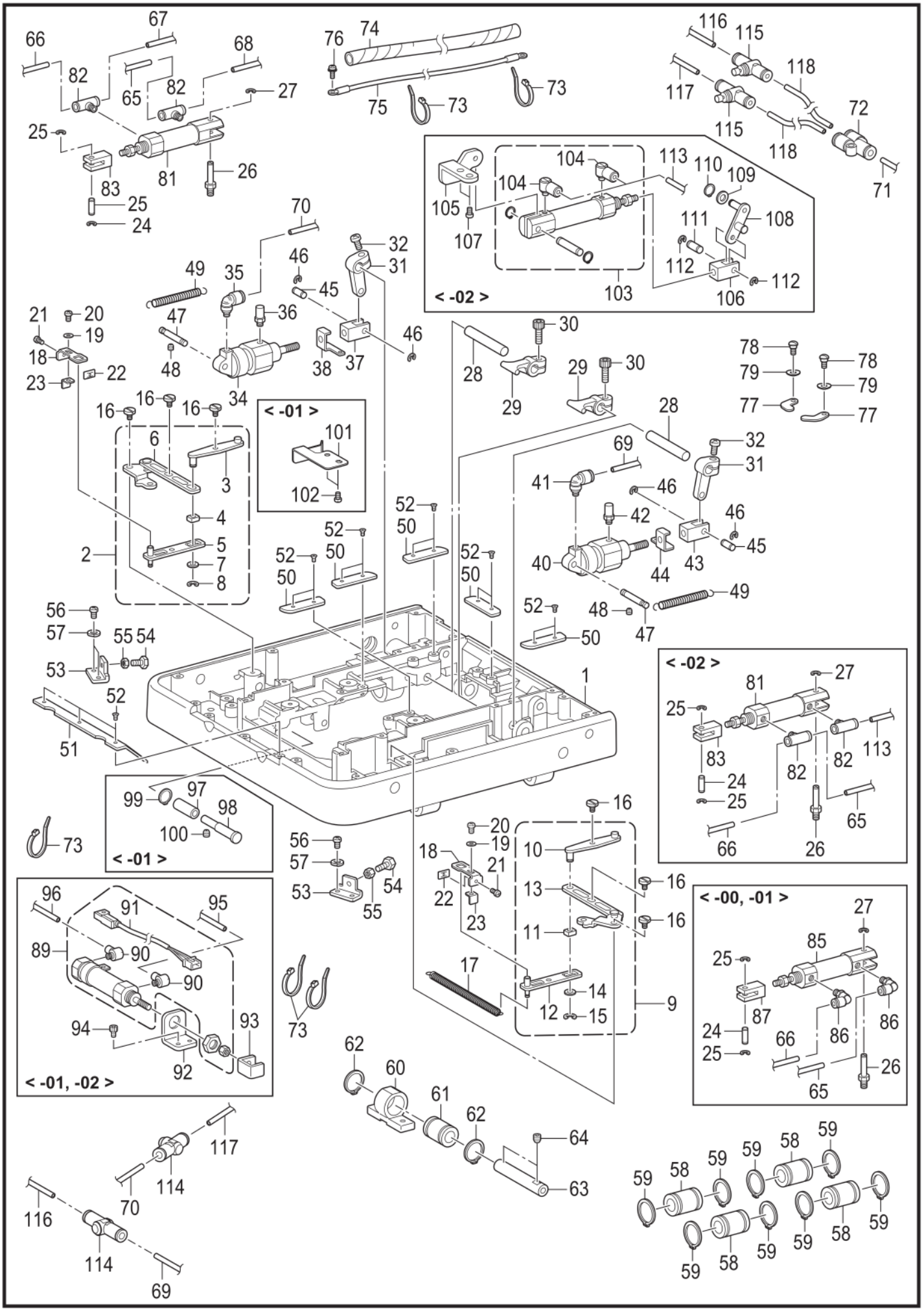


9820-201

## F1. 压脚装置 / Presser foot mechanism

| 参照号 | 零部件序号 | 数量 | 零部件名称 | NAME OF PARTS | RM |
|---|---|---|---|---|---|
| 65 | SA5681001 | 1 | 空气管 4X2.5-24 | AIR TUBE 4X2.5-24 | |
| 66 | SA5682001 | 1 | 空气管 4X2.5-23 | AIR TUBE 4X2.5-23 | |
| 67 | SA5683001 | 1 | 空气管 4X2.5-15 | AIR TUBE 4X2.5-15 | |
| 68 | SA5684001 | 1 | 空气管 4X2.5-16 | AIR TUBE 4X2.5-16 | |
| 69 | SA7973001 | 1 | 空气管 4X2.5-21 | AIR TUBE 4X2.5-21 | |
| 70 | SA7974001 | 1 | 空气管 4X2.5-22 | AIR TUBE 4X2.5-22 | |
| 71 | SA7975001 | 1 | 空气管 4X2.5-18 | AIR TUBE 4X2.5-18 | |
| 72 | S12104000 | 1 | 结合管接头 Y4 | UNION Y4 | |
| 73 | S04557000 | 5 | 电线夹 PLT1M | BAND, PLT1M | |
| 74 | SA5688101 | 1 | 螺旋卷线 L | SPIRAL L | |
| 75 | SA5435001 | 1 | 接地线 550 | GROUND WIRE 550 | |
| 76 | 052400606 | 1 | 螺钉(垫圈3点) M4X6 | SCREW, PAN (S/P WASHER) M4X6 | |
| 77 | SA6727001 | 2 | 板夹 | PLATE PRESSER | |
| 78 | S35324201 | 2 | 段螺钉 M4 | SHOULDER SCREW M4 | |
| 79 | S36345000 | 2 | 垫圈 | WASHER, BENDING | |
| | | | <用于-00和-01> | <For -00 & -01> | |
| 81 | SA7043001 | 1 | 气缸组件 T 16X15 | CYLINDER ASSY T 16X15 | |
| 82 | SA1828001 | 2 | 管接头 KQ2T04-M5 | JOINT, KQ2T04-M5 | |
| 83 | S34970001 | 1 | 气缸杆 | CYLINDER ROD OPENING | |
| 85 | SA7050001 | 1 | 气缸组件 L 16X15 | CYLINDER ASSY L 16X15 | |
| 86 | S11426000 | 2 | 弯管接头 4M5 | ELBOW UNION 4M5 | |
| 87 | S34970001 | 1 | 气缸杆 | CYLINDER ROD OPENING | |
| | | | <用于-01和-02> | <For -01 & -02> | |
| 89 | SA5679001 | 1 | 气缸组件 B 16X30 | CYLINDER ASSY B 16X30 | |
| 90 | S12150000 | 2 | 管接头 M-5HL-4 | TUBE ELBOW, M-5HL-4 | |
| 91 | SA6527001 | 1 | 感应器连线组件 | LOWER OFF SENSOR ASSY | |
| 92 | S34914101 | 1 | 气缸支架 | T-TRIM. CYLINDER SUPPORT PLATE | |
| 93 | S34913001 | 1 | 气缸手柄 | THREAD TRIMMER CYLINDER CLAW | |
| 94 | 018400836 | 2 | 螺栓 M4X8 | BOLT SOCKET M4X8 | |
| 95 | SA5680001 | 1 | 空气管 4X2.5-19 | AIR TUBE 4X2.5-19 | |
| 96 | SA5561001 | 1 | 空气管 4X2.5-20 | AIR TUBE 4X2.5-20 | |
| | | | <用于-01> | <For -01> | |
| 97 | SA7053001 | 1 | 轴套 | G-THREAD TAKE-UP GUIDE COLLER | |
| 98 | SA7054001 | 1 | 短轴 | G-THREAD TAKE-UP GUIDE SHAFT | |
| 99 | 048050142 | 1 | 轴用挡圈 C5 | RETAINING RING EXTERNAL C5 | |
| 100 | 014400532 | 1 | 螺钉 M4X5 | SET SCREW SOCKET (CP) M4X5 | |
| 101 | SA7555001 | 1 | 板弹簧 | FEED BAR PLATE SPRING | |
| 102 | 062400816 | 2 | 螺钉 M4X8 | SCREW PAN M4X8 | |
| | | | <用于-02> | <For -02> | |
| 81 | SA7043001 | 2 | 气缸组件 T 16X15 | CYLINDER ASSY T 16X15 | |
| 82 | SA1828001 | 4 | 管接头 KQ2T04-M5 | JOINT, KQ2T04-M5 | |
| 83 | S34970001 | 2 | 气缸杆 | CYLINDER ROD OPENING | |
| 103 | SA6719001 | 1 | 气缸组件 10X15 | CYLINDER ASSY 10X15 | |
| 104 | S12150000 | 2 | 管接头 M-5HL-4 | TUBE ELBOW, M-5HL-4 | |
| 105 | SA6720001 | 1 | 辅助压脚 S 支架 | AUX CLAMP S HOLDER | |
| 106 | S35351001 | 1 | 气缸杆 | CYLINDER ROD | |
| 107 | 062400816 | 2 | 螺钉 M4X8 | SCREW PAN M4X8 | |
| 108 | SA6721001 | 1 | 气缸杆销 | AUX CLAMP CONNECTING ROD ASSY | |
| 109 | 025060236 | 1 | 平垫圈 M6 | WASHER PLAIN M 6 | |
| 110 | 048060142 | 1 | 轴用挡圈 C6 | RETAINING RING EXTERNAL C6 | |
| 111 | SA6726001 | 1 | 气缸连杆销 | CYLINDER ROD PIN | |
| 112 | 048030342 | 2 | 挡圈 E3 | RETAINING RING E3 | |
| 113 | SA7131001 | 2 | 空气管 4X2.5-150 | AIR TUBE 4X2.5-150 | |
| 114 | SA7795001 | 2 | 快速排气管 | QUICK EXHAUST | |
| 115 | SA7793001 | 2 | 速控 4 | SPEED CONTROLLER | |
| 116 | SA7976001 | 1 | 空气管 4X2.5-25 | AIR TUBE 4X2.5-25 | |
| 117 | SA7977001 | 1 | 空气管 4X2.5-26 | AIR TUBE 4X2.5-26 | |
| 118 | SA7978001 | 2 | 空气管 4X2.5-27 | AIR TUBE 4X2.5-27 | |

F2 . 压脚装置 / Presser foot mechanism

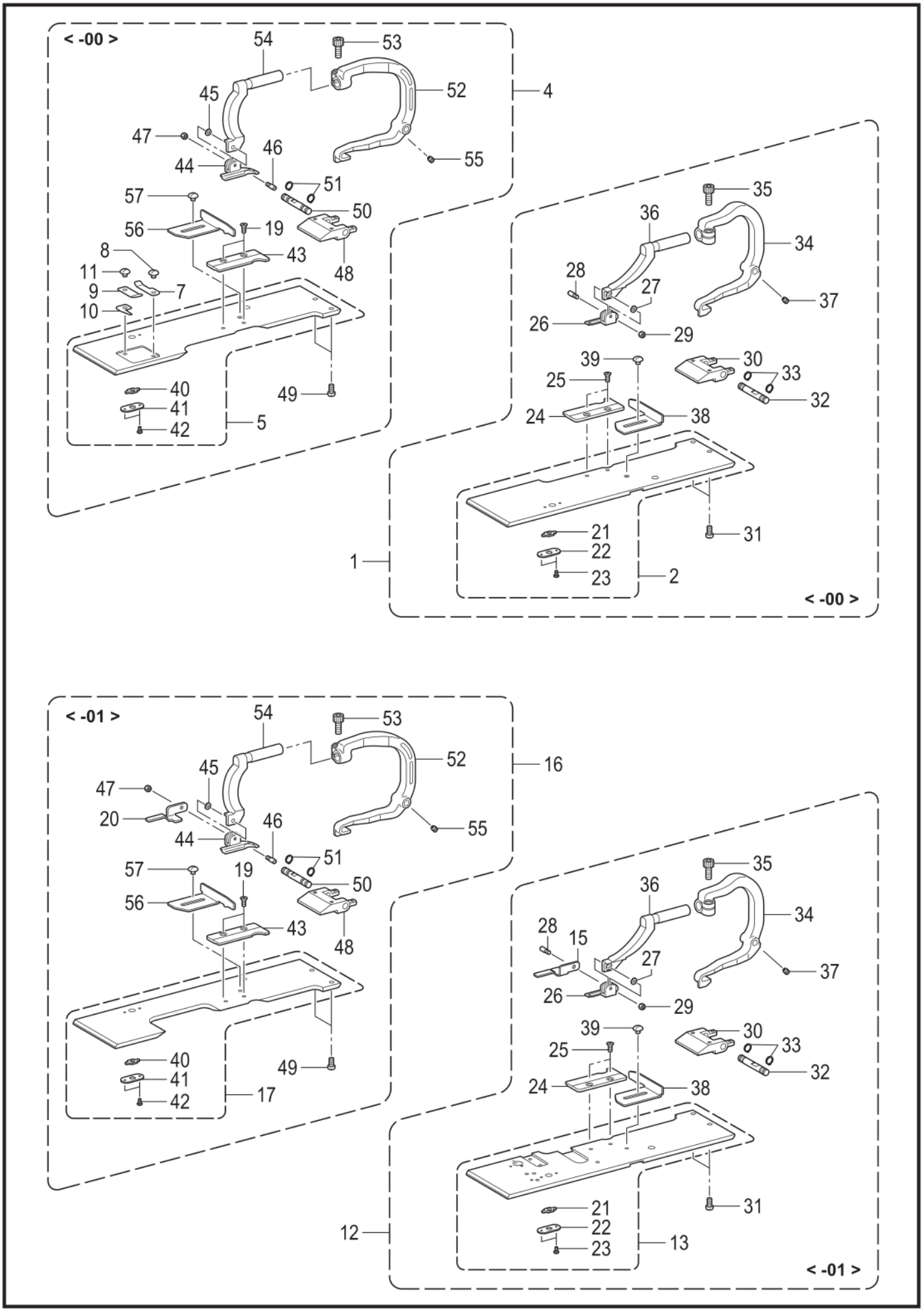


9820-201

## F2. 压脚装置 / Presser foot mechanism

| 参照号 | 零部件序号 | 数量 | 零部件名称 | NAME OF PARTS | RM |
|---|---|---|---|---|---|
| | | | <用于-00> | <For -00> | |
| 1 | SA7079001 | 1 | 压脚板总组件 R30 | WORK CLAMP PLATE R30 UNIT | |
| 2 | SA7080001 | 1 | 布压板组件 R | WORK CLAMP PLATE R ASSY | |
| 4 | SA7082101 | 1 | 压脚板总组件 L30 | WORK CLAMP PLATE L30 UNIT | |
| 5 | SA7083001 | 1 | 布压板组件 L | WORK CLAMP PLATE L ASSY | |
| 7 | SA7149001 | 1 | 板弹簧 | PLATE SPRING | |
| 8 | S35326101 | 1 | 螺钉 M3.5 | SCREW M3.5 | |
| 9 | SA7150101 | 1 | 切线 A | THREAD TRIMMER A | |
| 10 | SA7151101 | 1 | 切线 B | THREAD TRIMMER B | |
| 11 | S35326101 | 1 | 螺钉 M3.5 | SCREW M3.5 | |
| | | | <用于-01> | <For -01> | |
| 12 | SA7055001 | 1 | 压脚板总组件 RS30 | WORK CLAMP PLATE RS30 UNIT | |
| 13 | SA7056001 | 1 | 布压板组件 RS | WORK CLAMP PLATE RS ASSY | |
| 15 | S35330001 | 1 | 压料板 R | WORK CLAMP PLATE, R | |
| 16 | SA7060001 | 1 | 压脚板总组件 LS30 | WORK CLAMP PLATE LS30 UNIT | |
| 17 | SA7061001 | 1 | 布压板组件 LS | WORK CLAMP PLATE LS ASSY | |
| 20 | S35329001 | 1 | 压料板 L | WORK CLAMP PLATE, L | |
| 19 | S06696004 | 2 | 螺钉 M3X6 | SCREW, FLAT M3X6 | |
| 21 | S35315001 | 1 | 角块 | OPENING SLIDE BLOCK | |
| 22 | S35316001 | 1 | 角块支撑板 | SLIDE BLOCK SUPPORT PLATE | |
| 23 | 060020416 | 2 | 螺钉 M2X4 | SCREW BIND M2X4 | |
| 24 | SA5673001 | 1 | 针板 R-42 | NEEDLE PLATE R-42 | |
| 25 | S06696004 | 2 | 螺钉 M3X6 | SCREW, FLAT M3X6 | |
| 26 | S39932101 | 1 | 压布 R-30 | CLOTH WORK CLAMP, R-30 | |
| 27 | S35236000 | 1 | 垫圈 3.2 | WASHER, BENDING 3.2 | |
| 28 | S35235001 | 1 | 支架销 | SUPPORT PIN, CLAMP | |
| 29 | 021300306 | 1 | 螺母 M3 | NUT 3 M3 | |
| 30 | SA5560001 | 1 | 夹轴承受板 | CLAMP SHAFT HOLDER | |
| 31 | 062400816 | 2 | 螺钉 M4X8 | SCREW PAN M4X8 | |
| 32 | SA5674001 | 1 | 支点轴 | CLAMP FULCRUM SHAFT | |
| 33 | 048060142 | 2 | 轴用挡圈 C6 | RETAINING RING EXTERNAL C6 | |
| 34 | SA5585001 | 1 | 夹杆 R | CLAMP LEVER R | |
| 35 | 018501236 | 1 | 螺栓 M5X12 | BOLT SOCKET M5X12 | |
| 36 | SA5576001 | 1 | 夹臂 R | CLAMP ARM R | |
| 37 | 014400532 | 2 | 螺钉 M4X5 | SET SCREW SOCKET (CP) M4X5 | |
| 38 | SA7550001 | 1 | 布挡板 R | CROTH GUIDE R | |
| 39 | S35326101 | 1 | 螺钉 M3.5 | SCREW M3.5 | |
| 40 | S35315001 | 1 | 角块 | OPENING SLIDE BLOCK | |
| 41 | S35316001 | 1 | 角块支撑板 | SLIDE BLOCK SUPPORT PLATE | |
| 42 | 060020416 | 2 | 螺钉 M2X4 | SCREW BIND M2X4 | |
| 43 | SA5672001 | 1 | 针板 L-42 | NEEDLE PLATE L-42 | |
| 44 | S39931101 | 1 | 压布 L-30 | CLOTH WORK CLAMP, L-30 | |
| 45 | S35236000 | 1 | 垫圈 3.2 | WASHER, BENDING 3.2 | |
| 46 | S35235001 | 1 | 支架销 | SUPPORT PIN, CLAMP | |
| 47 | 021300306 | 1 | 螺母 M3 | NUT 3 M3 | |
| 48 | SA5560001 | 1 | 夹轴承受板 | CLAMP SHAFT HOLDER | |
| 49 | 062400816 | 2 | 螺钉 M4X8 | SCREW PAN M4X8 | |
| 50 | SA5674001 | 1 | 支点轴 | CLAMP FULCRUM SHAFT | |
| 51 | 048060142 | 2 | 轴用挡圈 C6 | RETAINING RING EXTERNAL C6 | |
| 52 | SA5671001 | 1 | 夹杆 L | CLAMP LEVER L | |
| 53 | 018501236 | 1 | 螺栓 M5X12 | BOLT SOCKET M5X12 | |
| 54 | SA5577001 | 1 | 夹臂 L | CLAMP ARM L | |
| 55 | 014400532 | 2 | 螺钉 M4X5 | SET SCREW SOCKET (CP) M4X5 | |
| 56 | SA7551001 | 1 | 布挡板 L | CROTH GUIDE L | |
| 57 | S35326101 | 1 | 螺钉 M3.5 | SCREW M3.5 | |

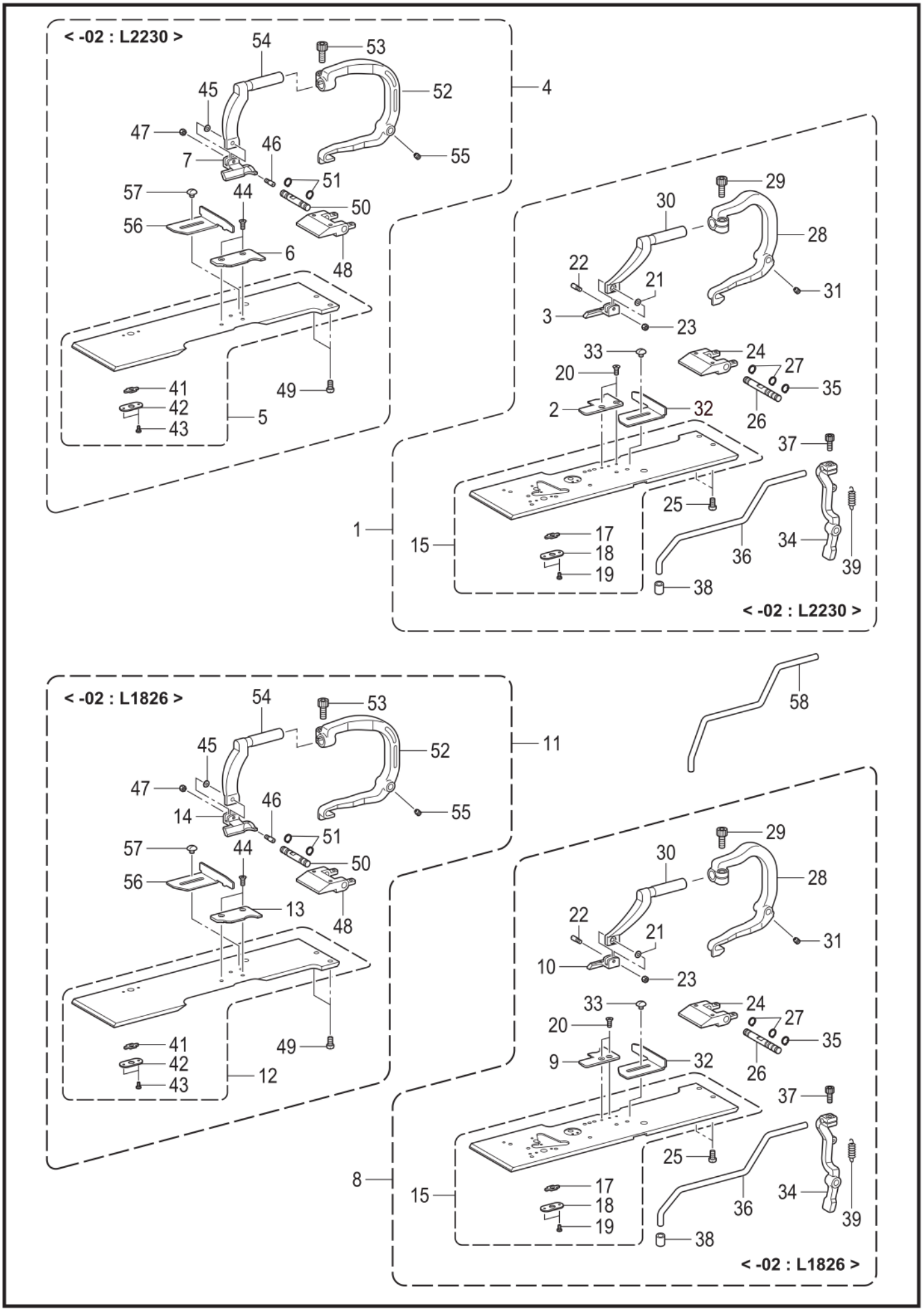
< -02 : L2230 >
54
53
52
45
47
46
7
55
51
57
44
50
56
6
48
41
42
43
49
5
4
29
30
28
22
21
31
3
23
33
24
27
20
35
2
32
26
37
25
17
18
19
36
34
39
38
1
15
< -02 : L2230 >
58
< -02 : L1826 >
54
53
52
45
47
46
14
55
51
57
44
50
56
13
48
41
42
43
49
12
11
29
30
28
22
21
31
10
23
33
24
27
20
35
9
32
26
37
25
17
18
19
36
34
39
38
8
15
< -02 : L1826 >

9820-201

## F3. 压脚装置 / Presser foot mechanism

| 参照号 | 零部件序号 | 数量 | 零部件名称 | NAME OF PARTS | RM |
|---|---|---|---|---|---|
| | | | <用于-02: L2230> | <For -02 : L2230> | |
| 1 | SA6728001 | 1 | 压脚板组件 R2230 | WORK CLAMP PLATE R2230 UNIT | |
| 2 | SA6731001 | 1 | 针板 L2230R | NEEDLE PLATE L 2230R | |
| 3 | SA6732001 | 1 | 压布板 R-JL2230 | WORK CLAMP R-JL2230 | |
| 4 | SA6738001 | 1 | 压脚板组件 L2230 | WORK CLAMP PLATE L2230 UNIT | |
| 5 | SA6739001 | 1 | 布压板组件 JL | WORK CLAMP PLATE JL ASSY | |
| 6 | SA6741001 | 1 | 针板 L2230L | NEEDLE PLATE L 2230L | |
| 7 | SA6742001 | 1 | 压布板 L-JL2230 | WORK CLAMP L-JL2230 | |
| | | | <用于-02: L1826> | <For -02: L1826> | |
| 8 | SA7187001 | 1 | 压脚板组件 R1826 | WORK CLAMP PLATE R1826 ASSY | |
| 9 | SA7105001 | 1 | 针板 L1826R | NEEDLE PLATE L1826R | |
| 10 | SA7095001 | 1 | 布压板 R-JL1826 | WORK CLAMP R-JL1826 | |
| 11 | SA7186001 | 1 | 压脚板组件 L1826 | WORK CLAMP PLATE L1826 ASSY | |
| 12 | SA6739001 | 1 | 布压板组件 JL | WORK CLAMP PLATE JL ASSY | |
| 13 | SA7100001 | 1 | 针板 L1826L | NEEDLE PLATE L1826L | |
| 14 | SA7090001 | 1 | 布压板 L-JL1826 | WORK CLAMP L-JL1826 | |
| 15 | SA6729001 | 1 | 布压板组件 JR | WORK CLAMP PLATE JR UNIT | |
| 17 | S35315001 | 1 | 角块 | OPENING SLIDE BLOCK | |
| 18 | S35316001 | 1 | 角块支撑板 | SLIDE BLOCK SUPPORT PLATE | |
| 19 | 060020416 | 2 | 螺钉 M2X4 | SCREW BIND M2X4 | |
| 20 | S06696004 | 2 | 螺钉 M3X6 | SCREW, FLAT M3X6 | |
| 21 | S35236000 | 1 | 垫圈 3.2 | WASHER, BENDING 3.2 | |
| 22 | S35235001 | 1 | 支架销 | SUPPORT PIN, CLAMP | |
| 23 | 021300306 | 1 | 螺母 M3 | NUT 3 M3 | |
| 24 | SA5560001 | 1 | 夹轴承受板 | CLAMP SHAFT HOLDER | |
| 25 | 062400816 | 2 | 螺钉 M4X8 | SCREW PAN M4X8 | |
| 26 | SA6733001 | 1 | 支点轴 J | CLAMP FULCRUM SHAFT J | |
| 27 | 048060142 | 2 | 轴用挡圈 C6 | RETAINING RING EXTERNAL C6 | |
| 28 | SA5585001 | 1 | 夹杆 R | CLAMP LEVER R | |
| 29 | 018501236 | 1 | 螺栓 M5X12 | BOLT SOCKET M5X12 | |
| 30 | SA6734001 | 1 | 夹臂 R-J | CLAMP ARM R-J | |
| 31 | 014400532 | 2 | 螺钉 M4X5 | SET SCREW SOCKET (CP) M4X5 | |
| 32 | SA7550001 | 1 | 布挡板 R | CROTH GUIDE R | |
| 33 | S35326101 | 1 | 螺钉 M3.5 | SCREW M3.5 | |
| 34 | SA6735001 | 1 | 辅助压脚臂 | AUX CLAMP ARM | |
| 35 | 048060142 | 1 | 轴用挡圈 C6 | RETAINING RING EXTERNAL C6 | |
| 36 | SA6736001 | 1 | 辅助压脚杆 | SUB AUX CLAMP WRIST | |
| 37 | 018401036 | 1 | 螺栓 M4X10 | BOLT SOCKET M4X10 | |
| 38 | S05356000 | 1 | 扣夹 A | BUTTON CLAMP, A | |
| 39 | SA6737001 | 1 | 回复弹簧 | AUX CLAMP TSWIST SPRING | |
| 41 | S35315001 | 1 | 角块 | OPENING SLIDE BLOCK | |
| 42 | S35316001 | 1 | 角块支撑板 | SLIDE BLOCK SUPPORT PLATE | |
| 43 | 060020416 | 2 | 螺钉 M2X4 | SCREW BIND M2X4 | |
| 44 | S06696004 | 2 | 螺钉 M3X6 | SCREW, FLAT M3X6 | |
| 45 | S35236000 | 1 | 垫圈 3.2 | WASHER, BENDING 3.2 | |
| 46 | S35235001 | 1 | 支架销 | SUPPORT PIN, CLAMP | |
| 47 | 021300306 | 1 | 螺母 M3 | NUT 3 M3 | |
| 48 | SA5560001 | 1 | 夹轴承受板 | CLAMP SHAFT HOLDER | |
| 49 | 062400816 | 2 | 螺钉 M4X8 | SCREW PAN M4X8 | |
| 50 | SA5674001 | 1 | 支点轴 | CLAMP FULCRUM SHAFT | |
| 51 | 048060142 | 2 | 轴用挡圈 C6 | RETAINING RING EXTERNAL C6 | |
| 52 | SA5671001 | 1 | 夹杆 L | CLAMP LEVER L | |
| 53 | 018501236 | 1 | 螺栓 M5X12 | BOLT SOCKET M5X12 | |
| 54 | SA6743001 | 1 | 夹臂 L-J | CLAMP ARM L-J | |
| 55 | 014400532 | 2 | 螺钉 M4X5 | SET SCREW SOCKET (CP) M4X5 | |
| 56 | SA7551001 | 1 | 布挡板 L | CROTH GUIDE L | |
| 57 | S35326101 | 1 | 螺钉 M3.5 | SCREW M3.5 | |
| | | | <选购件> | <Option parts> | |
| 58 | SA7152001 | 1 | 辅助压脚杆 L | SUPPORT WORK CLAMP ARM L | |

# G . 送布装置 / Feed mechanism

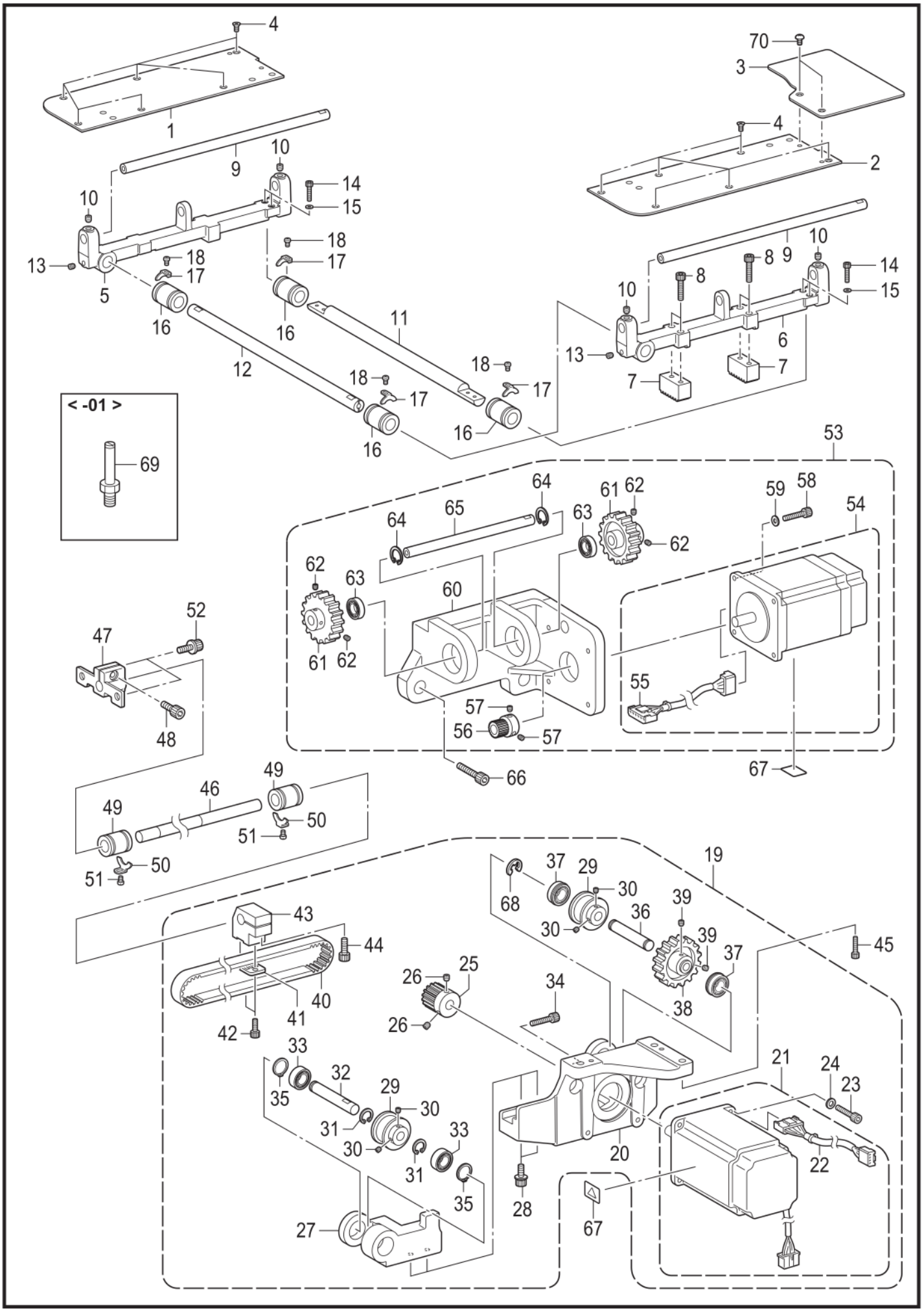

## G. 送布装置 / Feed mechanism

| 参照号 | 零部件序号 | 数量 | 零部件名称 | NAME OF PARTS | RM |
|---|---|---|---|---|---|
| 1 | SA6744001 | 1 | 送料台盖 L | FEED BAR COVER L | |
| 2 | SA6745001 | 1 | 送料台盖 R | FEED BAR COVER R | |
| 3 | SA8121001 | 1 | 送料台盖组件 U | FEED BAR COVER U ASSY | |
| 4 | 004401003 | 12 | 螺钉 M4X10 | SCREW, FLAT M4X10 | |
| 5 | SA6747001 | 1 | X送布轴架 S | X FEED SHAFT HOLDER S | |
| 6 | SA6748001 | 1 | X送布轴架 N | X FEED SHAFT HOLDER N | |
| 7 | SA6749001 | 2 | X齿条 | X RACK | |
| 8 | 018501636 | 4 | 螺栓 M5X16 | BOLT SOCKET M5X16 | |
| 9 | SA6750001 | 2 | Y送布导向轴 | Y FEED GUIDE SHAFT | |
| 10 | 012060636 | 4 | 螺钉 M6X6 | SET SCREW SOCKET (FT) M6X6 | |
| 11 | SA6751101 | 1 | X送布导向轴 A | X FEED GUIDE SHAFT A | |
| 12 | SA6752101 | 1 | X送布导向轴 B | X FEED GUIDE SHAFT B | |
| 13 | 012060636 | 2 | 螺钉 M6X6 | SET SCREW SOCKET (FT) M6X6 | |
| 14 | 018401636 | 4 | 螺栓 M4X16 | BOLT SOCKET M4X16 | |
| 15 | 025040136 | 4 | 平垫圈 S4 | WASHER PLAIN S 4 | |
| 16 | S35183000 | 4 | 直线形轴套 12 | LINEAR BUSH, 12 | |
| 17 | SA5562001 | 4 | 定位板 | BALL BEARING STOPPER | |
| 18 | 062300416 | 4 | 螺钉 M3X4 | SCREW PAN M3X4 | |
| 19 | SA6753001 | 1 | Y送料组件 | Y FEED ASSY | |
| 20 | SA6754001 | 1 | Y送布基座 | Y FEED BASE | |
| 21 | SA6521001 | 1 | 脉冲马达组件 Y | PULSE MOTOR ASSY Y | |
| 22 | SA6522001 | 1 | 马达接线 Y | MOTOR HARNESS Y | |
| 23 | 018401436 | 4 | 螺栓 M4X14 | BOLT SOCKET M4X14 | |
| 24 | 026040136 | 4 | 平垫圈 S4 | WASHER PLAIN S 4 | |
| 25 | SA6755001 | 1 | 驱动齿轮 20 | DRIVING GEAR 20 | |
| 26 | 012060636 | 2 | 螺钉 M6X6 | SET SCREW SOCKET (FT) M6X6 | |
| 27 | SA6756001 | 1 | Y轮基座 | Y PULLEY SUPPORT | |
| 28 | 3A6001001 | 2 | 螺栓(带垫圈) M5X20 | BOLT SOCKET (S/P WASHER) M5X20 | |
| 29 | SA6757001 | 2 | Y同步轮组件 | Y TIMING PULLEY ASSY | |
| 30 | 012060636 | 4 | 螺钉 M6X6 | SET SCREW SOCKET (FT) M6X6 | |
| 31 | 048160242 | 2 | 轴用挡圈 C16 | RETAINING RING INTERNAL C16 | |
| 32 | SA6760001 | 1 | Y手轮轴 R | Y PULLEY SHAFT R | |
| 33 | 530138001 | 2 | 微轴承 8 | BALL BEARING MICRO 8 | |
| 34 | 018502536 | 1 | 螺栓 M5X25 | BOLT SOCKET M5X25 | |
| 35 | 048080142 | 2 | 轴用挡圈 C8 | RETAINING RING EXTERNAL C8 | |
| 36 | SA6761001 | 1 | Y手轮轴 F | Y PULLEY SHAFT F | |
| 37 | 070688850 | 2 | R球轴承 688ZZ | BALL BEARING RADIAL 688ZZ | |
| 38 | SA6762001 | 1 | 空转齿轮 40 | IDLER GEAR 40 | |
| 39 | 012060636 | 2 | 螺钉 M6X6 | SET SCREW SOCKET (FT) M6X6 | |
| 40 | SA6763001 | 1 | T皮带 320-5GT | T BELT 320-5GT | |
| 41 | SA6764001 | 1 | 皮带支板 | BELT HOLDER | |
| 42 | 018400836 | 2 | 螺栓 M4X8 | BOLT SOCKET M4X8 | |
| 43 | SA6765001 | 1 | Y驱动轴支架 | Y DRIVING SHAFT HOLDER | |
| 44 | 018501636 | 1 | 螺栓 M5X16 | BOLT SOCKET M5X16 | |
| 45 | 018061636 | 3 | 螺栓 M6X16 | BOLT SOCKET M6X16 | |
| 46 | SA6766001 | 1 | Y轴 | Y SHAFT | |
| 47 | SA6767001 | 1 | Y轴支架 | Y SHAFT HOLDER | |
| 48 | 018501436 | 1 | 螺栓 M5X14 | BOLT SOCKET M5X14 | |
| 49 | S12004000 | 2 | 线性轴套 | LINEAR BUSH | |
| 50 | SA5562001 | 2 | 定位板 | BALL BEARING STOPPER | |
| 51 | 062300416 | 2 | 螺钉 M3X4 | SCREW PAN M3X4 | |
| 52 | S55476001 | 2 | 螺栓(带垫圈) M6X12 | BOLT SOCKET (S/P WASHER)M6X12 | |
| 53 | SA6768001 | 1 | X送料组件 | X FEED ASSY | |
| 54 | SA6517001 | 1 | 脉冲马达组件 X | PULSE MOTOR ASSY X | |
| 55 | SA6518001 | 1 | 马达接线 X | MOTOR HARNESS X | |
| 56 | SA4197001 | 1 | 送料齿轮 | FEED GEAR | |
| 57 | 012060636 | 2 | 螺钉 M6X6 | SET SCREW SOCKET (FT) M6X6 | |
| 58 | 018401436 | 4 | 螺栓 M4X14 | BOLT SOCKET M4X14 | |
| 59 | 026040136 | 4 | 平垫圈 S4 | WASHER PLAIN S 4 | |
| 60 | SA6769001 | 1 | X马达支座 | X MOTOR SUPPORT | |
| 61 | SA6770001 | 2 | 空转齿轮 | IDLER GEAR | |
| 62 | 012060636 | 4 | 螺钉 M6X6 | SET SCREW SOCKET (FT) M6X6 | |
| 63 | SA6771001 | 2 | 轴承 6001ZZ | BALL BEARING 6001ZZ | |

# G . 送布装置 / Feed mechanism

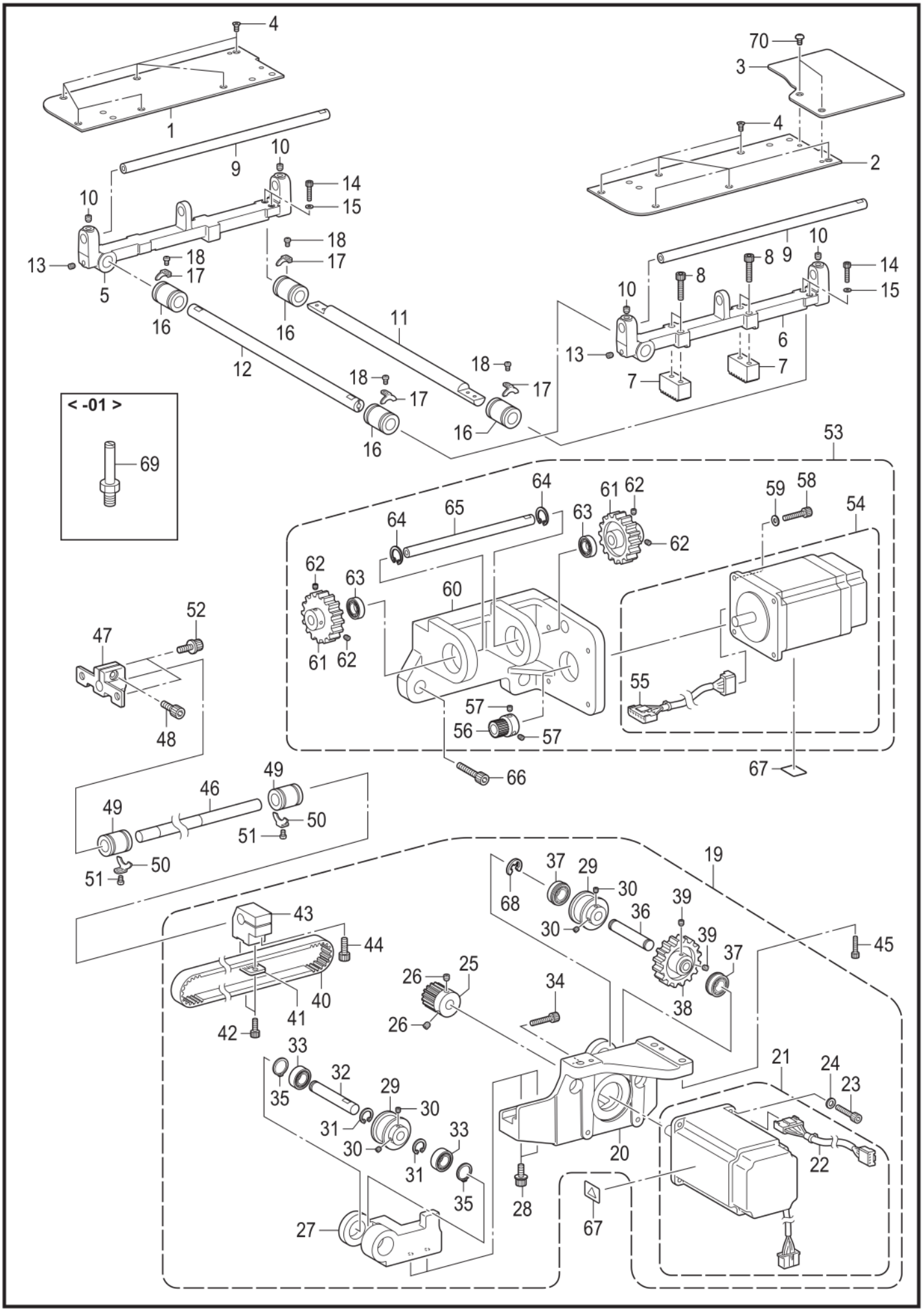

## G. 送布装置 / Feed mechanism

| 参照号 | 零部件序号 | 数量 | 零部件名称 | NAME OF PARTS | RM |
|---|---|---|---|---|---|
| 64 | 048280242 | 2 | 孔用挡圈 C28 | RETAINING RING INTERNAL C28 | |
| 65 | SA6772001 | 1 | X空转齿轮轴 | X IDLER GEAR SHAFT | |
| 66 | 018061636 | 3 | 螺栓 M6X16 | BOLT SOCKET M6X16 | |
| 67 | J03663001 | 2 | 高温标签 13X20 | LABEL, HIGH TEMP. 13X20 | |
| 68 | 048060342 | 1 | 挡圈 E6 | RETAINING RING E6 | |
| 70 | 008401204 | 2 | 螺钉 M4X12 | SCREW TRUSS M4X12 | |
| | | | <用于-01> | <For -01> | |
| 69 | SA5584001 | 1 | 气缸螺栓 | CYLINDER SCREW | |

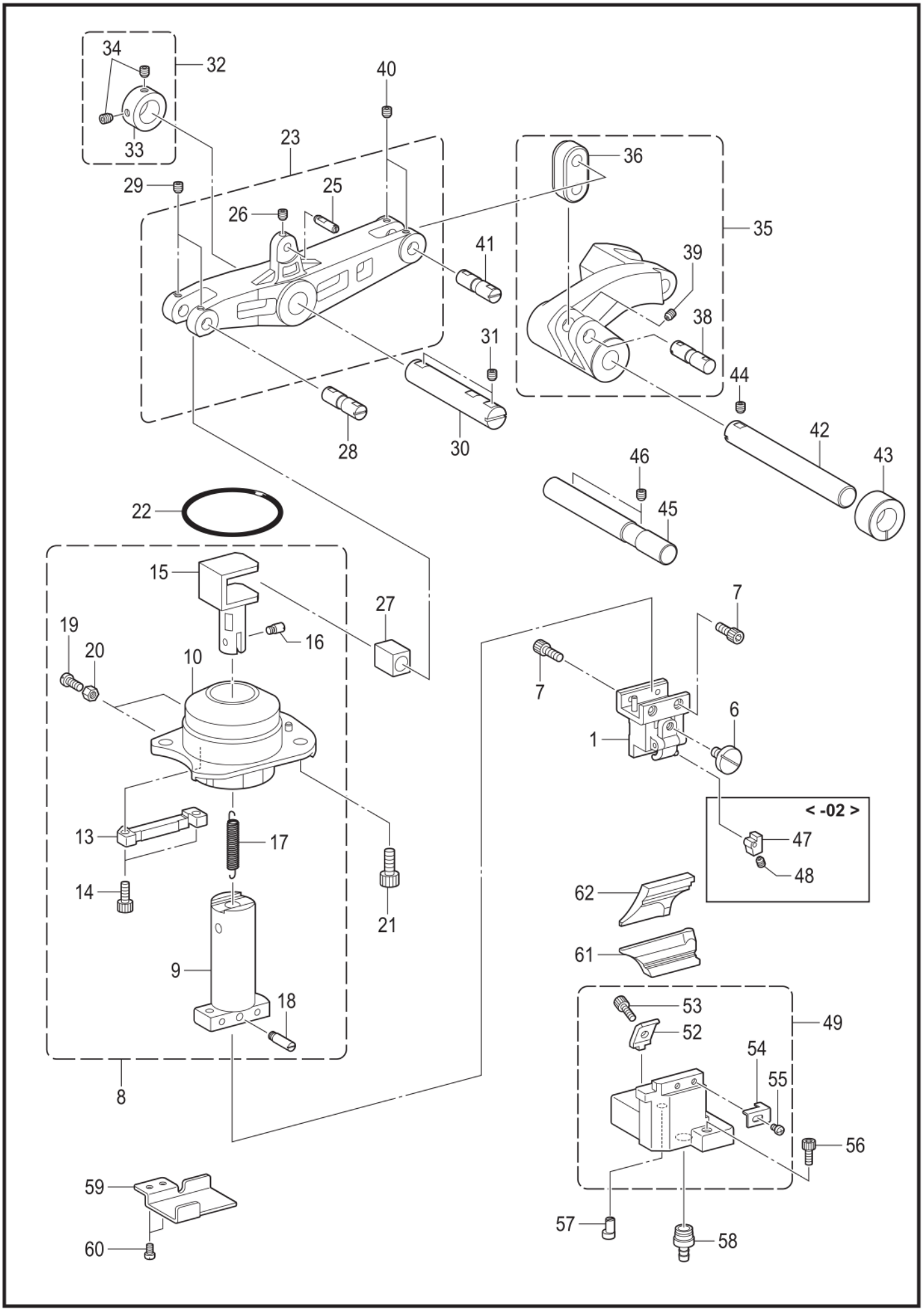
34
32
33
40
23
29
25
26
36
35
41
39
38
31
44
42
43
28
30
46
45
22
15
27
19
20
16
10
7
7
6
1
< -02 >
47
48
13
17
14
21
62
61
9
18
53
52
49
54
55
56
8
59
60
57
58

9820-218

## H. 切刀装置 / Cutter mechanism

| 参照号 | 零部件序号 | 数量 | 零部件名称 | NAME OF PARTS | RM |
|---|---|---|---|---|---|
| 1 | SA6773101 | 1 | 气锤基座组件 | HAMMER BRACKET ASSY | |
| 6 | S35091101 | 1 | 螺栓 M5 | KNOB SCREW M5 | |
| 7 | 018401036 | 4 | 螺栓 M4X10 | BOLT SOCKET M4X10 | |
| 8 | SA6776301 | 1 | 切刀动作轴组件 | CUTTER DRIVING SHAFT ASSY | |
| 9 | SA6777001 | 1 | 切刀动作轴 | CUTTER DRIVING SHAFT | |
| 10 | SA6778301 | 1 | 切刀轴套组件 | BUSH C-SHAFT ASSY | |
| 13 | SA6781001 | 1 | 回转制动 | GUIDE BLOCK | |
| 14 | 018401236 | 2 | 螺栓 M4X12 | BOLT SOCKET M4X12 | |
| 15 | SA6782001 | 1 | 切刀轴压杆 | DRIVING SHAFT PRESSER | |
| 16 | SA6783001 | 1 | 弹簧挂钩 U | SPRINNG HOOK PIN U | |
| 17 | SA6784001 | 1 | 弹簧 | SPRINNG EXTENSION | |
| 18 | SA6785001 | 1 | 弹簧挂钩 D | SPRINNG HOOK PIN D | |
| 19 | SA6786001 | 2 | 螺钉 4 | BOLT 4 | |
| 20 | 021400206 | 2 | 六角螺母 M4 | NUT 2 M4 | |
| 21 | 018061236 | 3 | 螺栓 M6X12 | BOLT SOCKET M6X12 | |
| 22 | 081050870 | 1 | O形圈 S50 | O RING S50 | |
| 23 | SA6787001 | 1 | 切刀臂组件 | CUTTER ARM ASSY | |
| 25 | SA6789001 | 1 | 切刀销 | C-SENSOR PIN | |
| 26 | 012500536 | 1 | 螺钉 M5X5 | SET SCREW SOCKET (FT) M5X5 | |
| 27 | SA6790001 | 1 | 切刀臂滑块 | C-ARM SLIDE BLOCK | |
| 28 | SA5563001 | 1 | 切刀臂销 | C-ARM PIN | |
| 29 | 014060836 | 2 | 固定螺钉 M6X8 | SET SCREW SOCKET (CP) M6X8 | |
| 30 | SA6791001 | 1 | 切刀臂轴 | C-ARM SHAFT | |
| 31 | 012061036 | 2 | 螺钉 M6X10 | SET SCREW SOCKET (FT) M6X10 | |
| 32 | SA6792001 | 1 | 紧圈组件 | SET SCREW COLLAR ASSY | |
| 33 | SA6793001 | 1 | 紧圈 | SET SCREW COLLAR | |
| 34 | 014060836 | 2 | 固定螺钉 M6X8 | SET SCREW SOCKET (CP) M6X8 | |
| 35 | SA6794001 | 1 | 切刀杆组件 | CUTTER LEVER ASSY | |
| 36 | SA6795001 | 1 | 切刀连接杆 | CUTTER LINK | |
| 38 | SA5563001 | 1 | 切刀臂销 | C-ARM PIN | |
| 39 | 014500836 | 2 | 螺钉 M5X8 | SET SCREW SOCKET (CP) M5X8 | |
| 40 | 014060836 | 2 | 固定螺钉 M6X8 | SET SCREW SOCKET (CP) M6X8 | |
| 41 | SA5563001 | 1 | 切刀臂销 | C-ARM PIN | |
| 42 | SA6797001 | 1 | 切刀杆轴 | CUTTER REVER SHAFT | |
| 43 | SA6798001 | 1 | 切刀杆轴套 | BUSH C-LEVER SHAFT | |
| 44 | 012061036 | 1 | 螺钉 M6X10 | SET SCREW SOCKET (FT) M6X10 | |
| 45 | SA6799001 | 1 | 气缸支撑轴 | CYLINDER SUPPORT SHAFT | |
| 46 | 014060836 | 2 | 固定螺钉 M6X8 | SET SCREW SOCKET (CP) M6X8 | |
| | | | <用于-02> | <For -02> | |
| 47 | SA6800001 | 1 | 气锤垫块 | HAMMER SPACER | |
| 48 | 014400536 | 1 | 螺钉 M4X5 | SET SCREW SOCKET(CP) M4X5 | |
| 49 | SA6801301 | 1 | 切刀基座总组件 | KNIFE BRACKET UNIT | |
| 52 | S35097101 | 1 | 切刀基座架 | KNIFE BLOCK HOLDER | |
| 53 | 018501636 | 1 | 螺栓 M5X16 | BOLT SOCKET M5X16 | |
| 54 | S35098000 | 1 | 基座定位板 | BLOCK STOPPER PLATE | |
| 55 | 062300416 | 1 | 螺钉 M3X4 | SCREW PAN M3X4 | |
| 56 | 018501636 | 3 | 螺栓 M5X16 | BOLT SOCKET M5X16 | |
| 57 | SA6804001 | 1 | 偏心销 | ECCENTRIC PIN | |
| 58 | SA6805001 | 1 | 切刀屑接头 | KNIFE GARBAGE JOINT | |
| 59 | SA6985001 | 1 | 管夹板 | TUBE GUIDE | |
| 60 | 062400816 | 1 | 螺钉 M4X8 | SCREW PAN M4X8 | |
| 61 | SA6806001 | 1 | 切刀 2.8X4.3-42 | KNIFE 2.8X4.3-42 | |
| 62 | * P. 102 | 1 | 气锤 | HAMMER | |

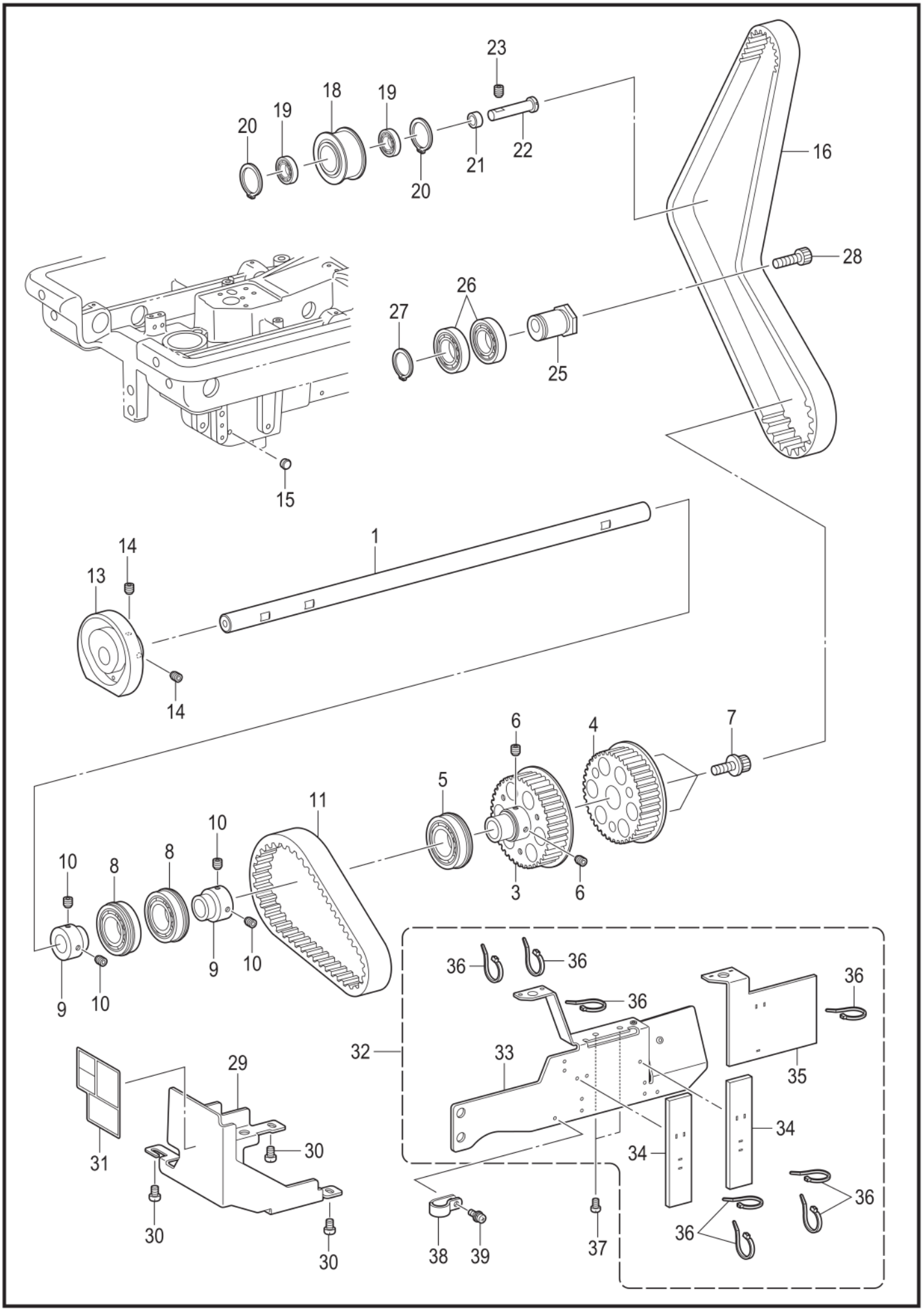
23
18
19
19
20
19
20
21
22
16
28
26
27
25
15
1
14
13
14
6
4
7
5
11
10
8
8
10
10
9
10
9
10
3
6
36
36
36
36
36
32
33
35
34
34
29
31
30
30
30
38
39
37
36
36

9820-305

## J. 下轴装置 / Lower shaft mechanism

| 参照号 | 零部件序号 | 数量 | 零部件名称 | NAME OF PARTS | RM |
|---|---|---|---|---|---|
| 1 | SA6807001 | 1 | 下轴 | LOWER SHAFT | |
| 3 | SA6809001 | 1 | 下轴T手轮 A | LOWER SHAFT TENSION PULLEY A | |
| 4 | SA6810001 | 1 | 下轴T手轮 B | LOWER SHAFT TENSION PULLEY B | |
| 5 | SA5571001 | 1 | 轴承 6004ZZNR | BALL BEARING 6004ZZNR | |
| 6 | S23651001 | 2 | 固定螺钉 M6X6 | SET SCREW SOCKET (FT) M6X6 | |
| 7 | S47270001 | 3 | 螺拴(带垫圈) M6X30 | BOLT SOCKET (S/P WASHER)M6X30 | |
| 8 | SA5573001 | 2 | 轴承 6204ZZNR | BALL BEARING 6204ZZNR | |
| 9 | SA5564001 | 2 | 轴承管套 | BEARING COLLAR | |
| 10 | S23651001 | 4 | 固定螺钉 M6X6 | SET SCREW SOCKET (FT) M6X6 | |
| 11 | SA6812001 | 1 | T皮带 375-5GT | T BELT 375-5GT | |
| 13 | SA6814001 | 1 | 下轴凸轮 | LOWER SHAFT CAM | |
| 14 | S23651001 | 2 | 固定螺钉 M6X6 | SET SCREW SOCKET (FT) M6X6 | |
| 15 | 104833001 | 1 | 橡皮塞 4.3 | RUBBER CAP, 4.3 | |
| 16 | SA6815001 | 1 | T皮带 1115-5GT | T BELT 1115-5GT | |
| 18 | SA6817001 | 1 | 空转轮组件 | IDLER PULLEY ASSY | |
| 19 | SA5570001 | 2 | 轴承 608ZZ | BALL BEARING 608ZZ | |
| 20 | 048220242 | 2 | 孔用挡圈 C22 | RETAINING RING INTERNAL C22 | |
| 21 | S50168001 | 1 | 惰轮管套 | COLLAR | |
| 22 | SA6819001 | 1 | 空转轮轴 | IDLER PULLEY SHAFT | |
| 23 | 012061036 | 1 | 螺钉 M6X10 | SET SCREW SOCKET (FT) M6X10 | |
| 25 | SA6821001 | 1 | 张力轮套 | TENSION PULLEY COLLER | |
| 26 | SA5572001 | 2 | 轴承 6004ZZ | BALL BEARING 6004ZZ | |
| 27 | 048200142 | 1 | 轴用挡圈 C20 | RETAINING RING EXTERNAL C20 | |
| 28 | 018084036 | 1 | 螺栓 M8X40 | BOLT SOCKET M8X40 | |
| 29 | SA6822001 | 1 | 凸轮盖 | CAM COVER | |
| 30 | 062500816 | 3 | 螺钉 M5X8 | SCREW PAN M5X8 | |
| 31 | SA6823001 | 1 | 底线穿线表 | LOWER THREADER LABEL | |
| 32 | SA6824001 | 1 | 下轴盖组件 | LOWER SHAFT COVER ASSY | |
| 33 | SA6825001 | 1 | 下轴盖 | LOWER SHAFT COVER | |
| 34 | SA6826001 | 2 | 下轴盖油毡 A | LOWER SHAFT COVER FELT A | |
| 35 | SA6827001 | 1 | 下轴盖油毡 B | LOWER SHAFT COVER FELT B | |
| 36 | 228475000 | 8 | 电线夹 1.9X80 | FASTENING BAND 1.9X80 | |
| 37 | 062400816 | 2 | 螺钉 M4X8 | SCREW PAN M4X8 | |
| 38 | S10243000 | 1 | 尼龙夹 NK-3N | CORD HOLDER, NK-3N | |
| 39 | 0A4400806 | 1 | 螺栓(带垫圈) M4X8DA | SCREW PAN (S/P WASHER) M4X8 | |

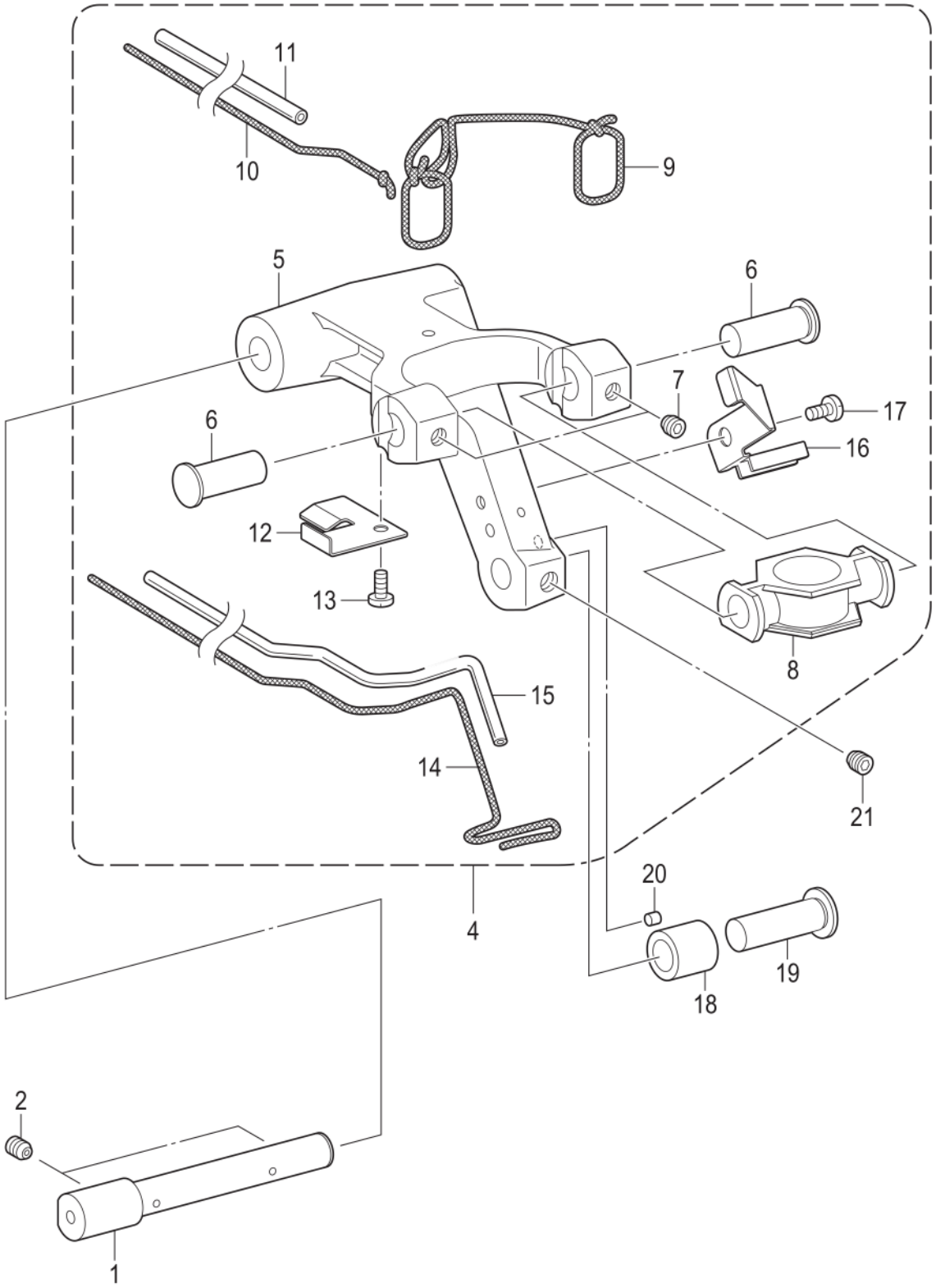


9820-306

## K. 弯针装置 / Looper mechanism

| 参照号 | 零部件序号 | 数量 | 零部件名称 | NAME OF PARTS | RM |
|---|---|---|---|---|---|
| 1 | SA6828001 | 1 | 弯针杆轴 | LOOPER LEVER SHAFT | |
| 2 | 014500836 | 2 | 螺钉 M5X8 | SET SCREW SOCKET (CP) M5X8 | |
| 4 | SA6829001 | 1 | 弯针杆组件 | LOOPER LEVER ASSY | |
| 5 | SA6830001 | 1 | 弯针杆 | LOOPER LEVER | |
| 6 | SA6831001 | 2 | 短轴 6.35 | SHAFT 6.35 | |
| 7 | 012500536 | 2 | 螺钉 M5X5 | SET SCREW SOCKET (FT) M5X5 | |
| 8 | SA6834001 | 1 | 弯针作动台 | LOOPER DRIVING PLATE | |
| 9 | SA6835001 | 1 | 油线 2X2 | WICK 2X2 | |
| 10 | SA6836001 | 1 | 油线 2X2 | WICK 2X2 | |
| 11 | SA5565001 | 1 | 油管 | OIL TUBE | |
| 12 | SA6837001 | 1 | 油管夹 A | LOOPER TUBE CLAMP A | |
| 13 | 060300816 | 1 | 螺钉 M3X8 | SCREW BIND M3X8 | |
| 14 | SA6838001 | 1 | 油线 3X3 | WICK 3X3 | |
| 15 | SA6839001 | 1 | 油管 | OIL TUBE | |
| 16 | SA6840001 | 1 | 油管夹 B | LOOPER TUBE CLAMP B | |
| 17 | 060300816 | 1 | 螺钉 M3X8 | SCREW BIND M3X8 | |
| 18 | SA6832101 | 1 | 下轴凸轮管套 | LOWER SHAFT CAM COLLER | |
| 19 | SA6833001 | 1 | 弯针凸轮滚轮轴 | LOOPER CAM ROLLER SHAFT | |
| 20 | S12718000 | 1 | 毡 | CHEMICAL FELT | |
| 21 | 014060632 | 1 | 固定螺钉 M6X6 | SET SCREW SOCKET (CP) M6X6 | |

# L . 双链式弯针装置 / Double chain stitch looper mechanism

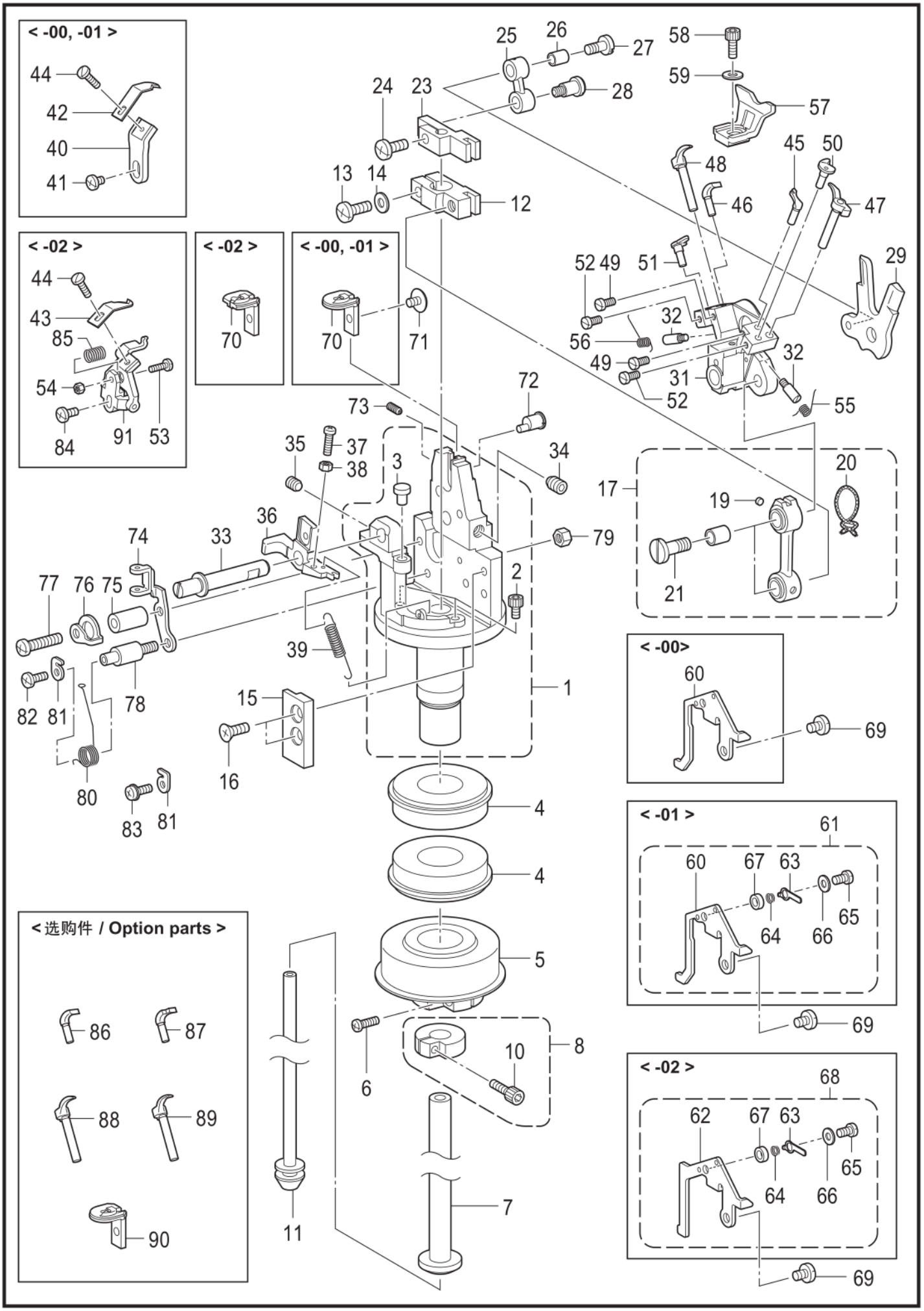

## L. 双链式弯针装置 / Double chain stitch looper mechanism

| 参照号 | 零部件序号 | 数量 | 零部件名称 | NAME OF PARTS | RM |
|---|---|---|---|---|---|
| 1 | SA6841101 | 1 | 弯针座组件 | LOOPER BASE ASSY | |
| 2 | 018400636 | 2 | 螺栓 M4X6 | BOLT SOCKET M4X6 | |
| 3 | SA6844001 | 1 | 定位销 4 | INPUT PIN 4 | |
| 4 | SA5571001 | 2 | 轴承 6004ZZNR | BALL BEARING 6004ZZNR | |
| 5 | SA6845001 | 1 | 弯针轮组件 | LOOPER PULLEY ASSY | |
| 6 | 062351615 | 1 | 螺钉 M3.5X16 | SCREW PAN M3.5X16 | |
| 7 | SA6848001 | 1 | 弯针驱动轴 | LOOPER DRIVING SHAFT | |
| 8 | SA6849001 | 1 | 弯针驱动轴抱箍组件 | LOOPER DRIVING SHAFT ASSY | |
| 10 | 018301436 | 1 | 螺栓 M3X14 | BOLT SOCKET M3X14 | |
| 11 | SA6851001 | 1 | 叉板连杆轴 | SPREADER LINK SHAFT | |
| 12 | SA6852001 | 1 | 弯针连杆支点 | LOOPER LINK CLAMP | |
| 13 | 060401416 | 1 | 螺钉 M4X14 | SCREW BIND M4X14 | |
| 14 | 026040136 | 1 | 平垫圈 S4 | WASHER PLAIN S 4 | |
| 15 | SA6853001 | 1 | LS滑块导向 | LS SLIDE GUIDE | |
| 16 | 004401003 | 2 | 螺钉 M4X10 | SCREW, FLAT M4X10 | |
| 17 | SA7204101 | 1 | 弯针连杆总组件 | LOOPER LINK UNIT | |
| 19 | S52832000 | 1 | 油毡 | FELT | |
| 20 | SA6857001 | 1 | 油线 2X2 | WICK 2X2 | |
| 21 | SA6858001 | 2 | 固定螺栓 | LOOPER LINK FASTENING SCREW | |
| 23 | SA6859001 | 1 | 叉板连杆基座 | SPREADER LINK BASE | |
| 24 | 060401016 | 1 | 螺钉 M4X10 | SCREW BIND M4X10 | |
| 25 | SA6860001 | 1 | 叉板凸轮连杆 | SPREADER CAM LINK | |
| 26 | S35018001 | 1 | 凸轮连杆管套 | CAM LINK COLLOR | |
| 27 | S35014001 | 1 | 段螺钉 M4 | SHOULDER SCREW, M4 | |
| 28 | S35019001 | 1 | 段螺钉 M4 | SHOULDER SCREW, M4 | |
| 29 | SA6861001 | 1 | 叉板作动凸轮 | SPREADER DRIVING CAM | |
| 31 | SA6863001 | 1 | LS支撑基座 | LS HOLDER BASE | |
| 32 | SA6864001 | 2 | 弹簧导向螺钉 | SPRING GUIDE SCREW | |
| 33 | SA6865001 | 1 | 支撑短轴 | HOLDER PRESSER SHAFT | |
| 34 | 014060836 | 1 | 固定螺钉 M6X8 | SET SCREW SOCKET (CP) M6X8 | |
| 35 | 012500536 | 1 | 螺钉 M5X5 | SET SCREW SOCKET (FT) M5X5 | |
| 36 | SA6866001 | 1 | 切线杆基座 | THREAD TRIMMER LEVER BRACKET | |
| 37 | 062301016 | 1 | 螺钉 M3X10 | SCREW PAN M3X10 | |
| 38 | 021300306 | 1 | 螺母 M3 | NUT 3 M3 | |
| 39 | SA6867001 | 1 | U切线弹簧 | U THREAD TRIMMER SPRING | |
| | | | <用于-00和-01> | <For -00 & -01> | |
| 40 | SA7064001 | 1 | 上动刀台 | UPPER MOVABLE KNIFE | |
| 41 | 060300416 | 1 | 螺钉 M3X4 | SCREW BIND M3X4 | |
| 42 | S35029001 | 1 | 上动刀 A | UPPER MOVABLE KNIFE, A | |
| | | | <用于-02> | <For -02> | |
| 43 | S37723101 | 1 | 上动刀 B | UPPER MOVABLE KNIFE, B | |
| 44 | 105288001 | 1 | 螺钉 SM2.38 | SCREW SM2.38 | |
| 45 | S35410001 | 1 | 弯针 R | LOOPER, R | |
| 46 | SA7547101 | 1 | 有孔弯针 | EYE LOOPER | |
| 47 | S35412101 | 1 | 右叉板 R | SPREADER, R | |
| 48 | S35413101 | 1 | 左叉板 L | SPREADER, L | |
| 49 | S35032101 | 2 | 螺钉 M2.6X5.5 | SCREW, M2.6X5.5 | |
| 50 | S35034001 | 1 | 叉板定位 R | SPREADER STOPPER, R | |
| 51 | S35033001 | 1 | 叉板定位 L | SPREADER STOPPER, L | |
| 52 | S35032101 | 2 | 螺钉 M2.6X5.5 | SCREW, M2.6X5.5 | |
| | | | <用于-02> | <For -02> | |
| 53 | S37724001 | 1 | 螺钉 SM2.38 | SCREW, SM2.38 | |
| 54 | S47932001 | 1 | 螺母 SM2.38-56 | NUT, SM2.38-56 | |

# L . 双链式弯针装置 / Double chain stitch looper mechanism

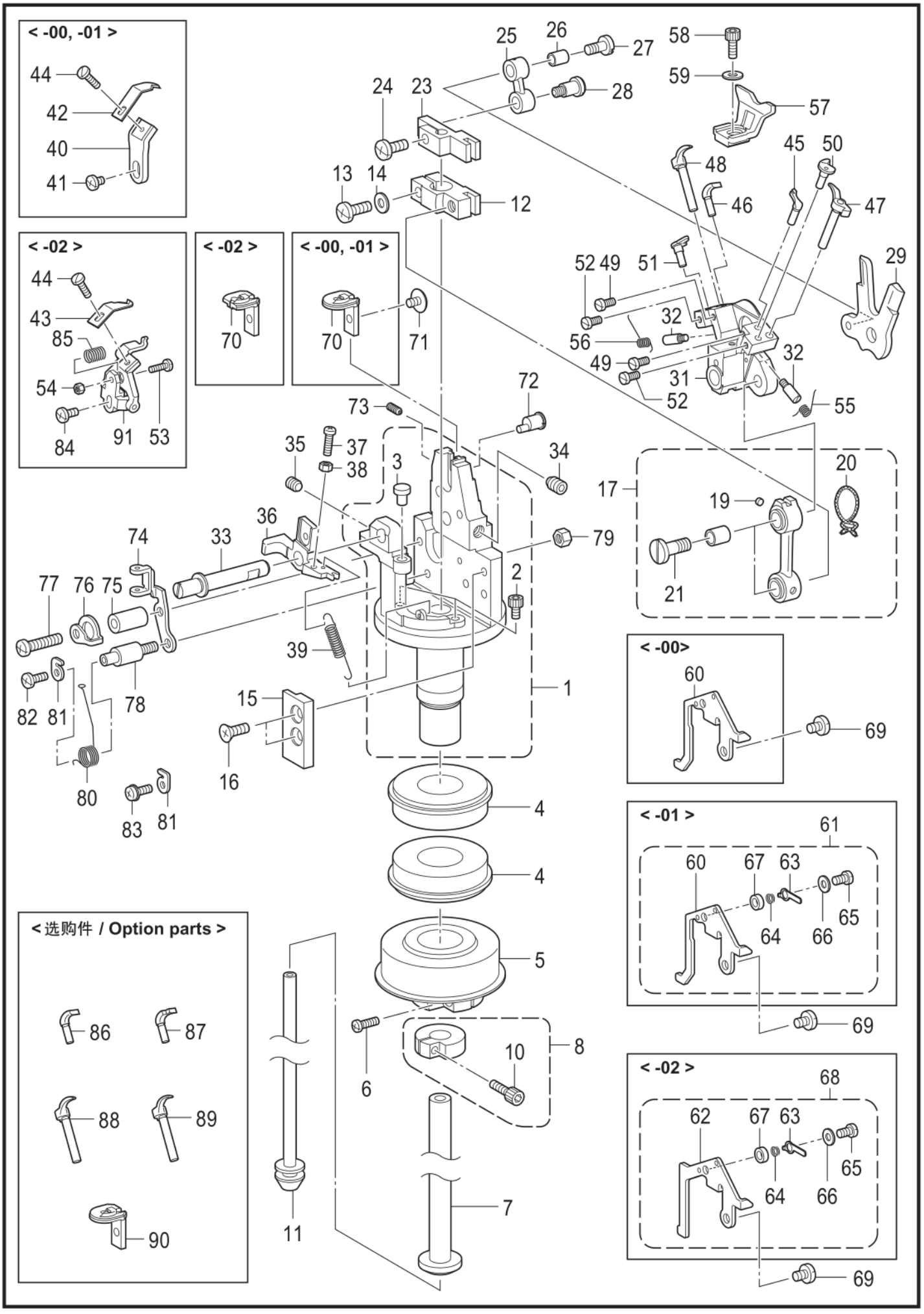


9820-309

## L. 双链式弯针装置 / Double chain stitch looper mechanism

| 参照号 | 零部件序号 | 数量 | 零部件名称 | NAME OF PARTS | RM |
|---|---|---|---|---|---|
| 55 | S35035101 | 1 | 叉板弹簧 R | SPRING, TWIST :R | |
| 56 | S35036101 | 1 | 叉板弹簧 L | SPRING, TWIST :L | |
| 57 | SA6872001 | 1 | 护针 U | NEEDLE GUARD U | |
| 58 | 018300836 | 1 | 螺栓 M3X8 | BOLT SOCKET M3X8 | |
| 59 | 025030136 | 1 | 平垫圈 S3 | WASHER PLAIN S 3 | |
| | | | <用于-00> | <For -00> | |
| 60 | SA7063001 | 1 | 芯线导向 C | GIMP THREAD GUIDE C | |
| | | | <用于-01> | <For -01> | |
| 61 | SA7578001 | 1 | 芯线导向组件 C | GIMP THREAD GUIDE C ASSY | |
| 60 | SA7063001 | 1 | 芯线导向 C | GIMP THREAD GUIDE C | |
| 63 | SA7613001 | 1 | 芯线压板 | GIMP THREAD CLAMP PLATE | |
| 64 | SA7614001 | 1 | 芯线调节弹簧 | GIMP THREAD TENSION SPRING | |
| 65 | 062300506 | 1 | 螺钉 M3X5 | SCREW PAN M3X5 | |
| 66 | 025030236 | 1 | 平垫圈 M3 | WASHER PLAIN M 3 | |
| 67 | SA7615001 | 1 | 管套 3 | COLLAR 3 | |
| | | | <用于-02> | <For -02> | |
| 68 | SA6873001 | 1 | 芯线导向组件 C-J | GIMP THREAD GUIDE C-J ASSY | |
| 62 | SA6874001 | 1 | 芯线导向 C-J | GIMP THREAD GUIDE C-J | |
| 63 | SA7613001 | 1 | 芯线压板 | GIMP THREAD CLAMP PLATE | |
| 64 | SA7614001 | 1 | 芯线调节弹簧 | GIMP THREAD TENSION SPRING | |
| 65 | 062300506 | 1 | 螺钉 M3X5 | SCREW PAN M3X5 | |
| 66 | 025030236 | 1 | 平垫圈 M3 | WASHER PLAIN M 3 | |
| 67 | SA7615001 | 1 | 管套 3 | COLLAR 3 | |
| 69 | 060400516 | 1 | 螺钉 M4X5 | SCREW BIND M4X5 | |
| | | | <用于-00和-01> | <For -00 & -01> | |
| 70 | SA7065001 | 1 | 针孔板 1.6 | THROAT PLATE 1.6 | |
| | | | <用于-02> | <For -02> | |
| 70 | S37752001 | 1 | 针孔板 1.8-J | THROAT PLATE, 1.8-J | |
| 71 | S35326101 | 1 | 螺钉 M3.5 | SCREW M3.5 | |
| 72 | SA6875001 | 1 | 销 | VERTICAL PIN | |
| 73 | 014300832 | 1 | 螺钉 M3X8 | SET SCREW SOCKET (CP) M3X8 | |
| 74 | SA6876001 | 1 | 底线导线板 | THREAD GUIDE PLATE | |
| 75 | SA6877001 | 1 | 管套 | COLLAR | |
| 76 | SA6878001 | 1 | L夹线弹簧导向 | L TR TAKE-UP SPRING SUPPORT | |
| 77 | 062402016 | 1 | 螺钉 M4X20 | SCREW PAN M4X20 | |
| 78 | SA6879001 | 1 | 弹簧导向轴 | SPRING GUIDE SHAFT | |
| 79 | 021400316 | 1 | 六角螺母 M4 | NUT 3 M4 | |
| 80 | SA6880001 | 1 | 夹线弹簧 | THREAD TAKE-UP SPRING | |
| 81 | SA6881001 | 2 | L夹线弹簧支撑 | L TR TAKE-UP SPRING SUPPORT | |
| 82 | 060300816 | 1 | 螺钉 M3X8 | SCREW BIND M3X8 | |
| 83 | 0A4300805 | 1 | 螺栓(带垫圈) M3X8DA | SCREW PAN (S/P WASHER) M3X8 | |
| | | | <用于-02> | <For -02> | |
| 84 | 060300816 | 1 | 螺钉 M3X8 | SCREW BIND M3X8 | |
| 85 | S37725001 | 1 | 底线压簧 | COMPRESSIONSPRING | |
| 91 | SA6868101 | 1 | 底线压板组件 J | LOWER THREAD PRESSER J ASSY | |
| | | | <选购件> | <Option parts> | |
| 86 | SA7634101 | 1 | 有孔弯针 B | EYE LOOPER, B | |
| 87 | S49078001 | 1 | 弯针 L-S | LOOPER, L-S | |
| 88 | S35472101 | 1 | 叉板 LB | SPREADER, LB | |
| 89 | S49079001 | 1 | 叉板 L-S | SPREADER, L-S | |
| 90 | SA7546001 | 1 | 针孔板 1.1 | THROAT PLATE, 1.1 | |

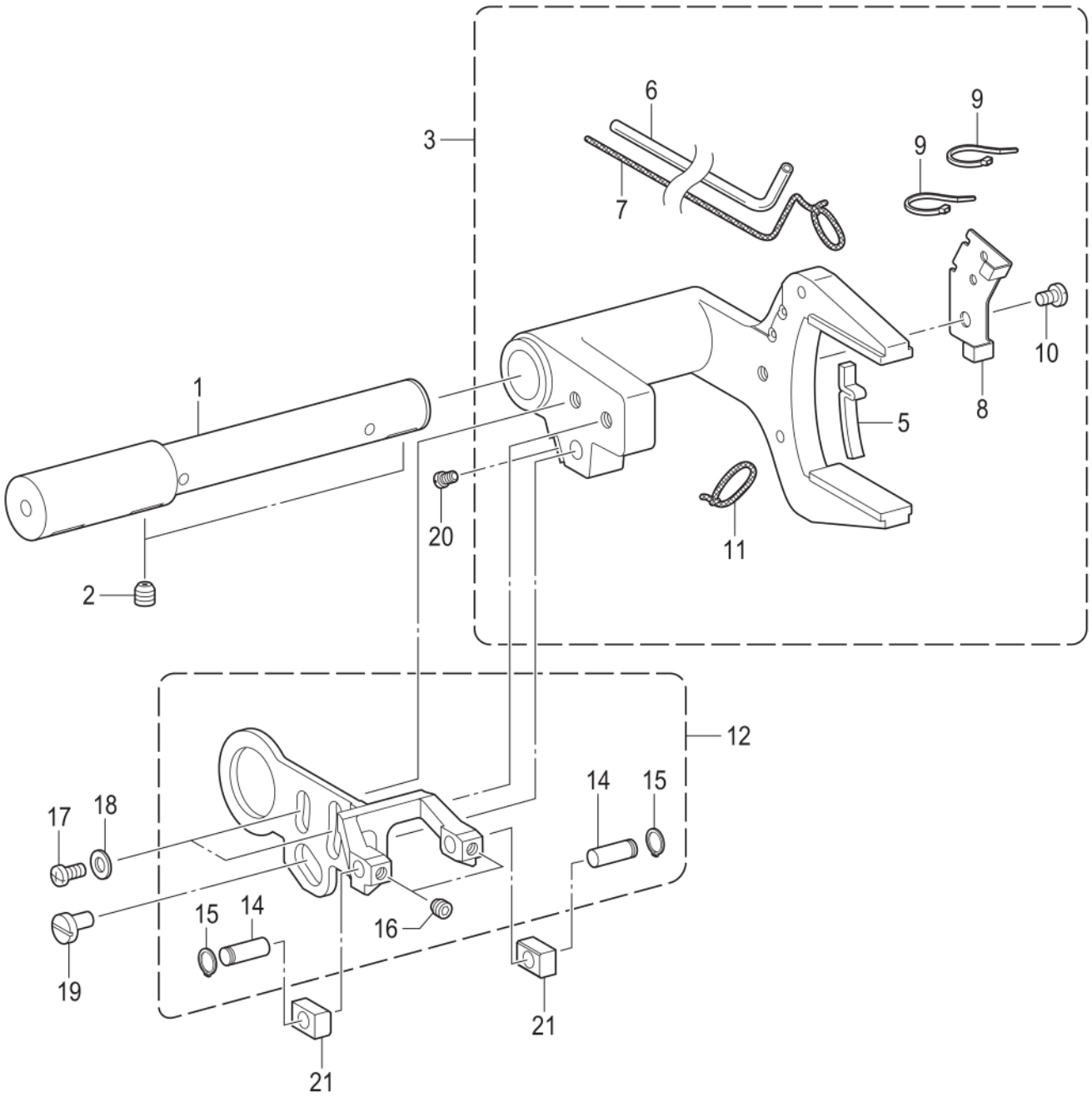


9820-310

## M. 分纱装置 / Spreader mechanism

| 参照号 | 零部件序号 | 数量 | 零部件名称 | NAME OF PARTS | RM |
|---|---|---|---|---|---|
| 1 | SA6882001 | 1 | 叉板杆轴 | SPREADER LEVER SHAFT | |
| 2 | 014500836 | 2 | 螺钉 M5X8 | SET SCREW SOCKET (CP) M5X8 | |
| 3 | SA6883101 | 1 | 叉板杆组件 A | SPREADER LEVER A ASSY | |
| 5 | SA6885001 | 1 | 油毡 | SPREADER LEVER FELT | |
| 6 | SA5565001 | 1 | 油管 | OIL TUBE | |
| 7 | SA6886001 | 1 | 油线 2X2 | WICK 2X2 | |
| 8 | SA6887001 | 1 | 油管压板 | SPREADER TUBE CLAMP | |
| 9 | 228475000 | 2 | 电线夹 1.9X80 | FASTENING BAND 1.9X80 | |
| 10 | 060400516 | 1 | 螺钉 M4X5 | SCREW BIND M4X5 | |
| 11 | SA8001001 | 1 | 油线 2X2 | WICK 2X2 | |
| 12 | SA6888001 | 1 | 叉板杆组件 B | SPREADER LEVER B ASSY | |
| 14 | SA6890001 | 2 | 轴 6X15.5 | SHAFT 6X15.5 | |
| 15 | 048060142 | 2 | 轴用挡圈 C6 | RETAINING RING EXTERNAL C6 | |
| 16 | 012500536 | 2 | 螺钉 M5X5 | SET SCREW SOCKET (FT) M5X5 | |
| 17 | 062400816 | 2 | 螺钉 M4X8 | SCREW PAN M4X8 | |
| 18 | 025040236 | 2 | 平垫圈 M4 | WASHER PLAIN M 4 | |
| 19 | SA6891001 | 1 | 偏心销 | ECCENTRIC PIN | |
| 20 | S25279101 | 1 | 螺钉 M3.5-5 | SET SCREW (CP) M3.5-5 | |
| 21 | SA6892001 | 2 | 角块 6X8 | SLIDE BLOCK 6X8 | |

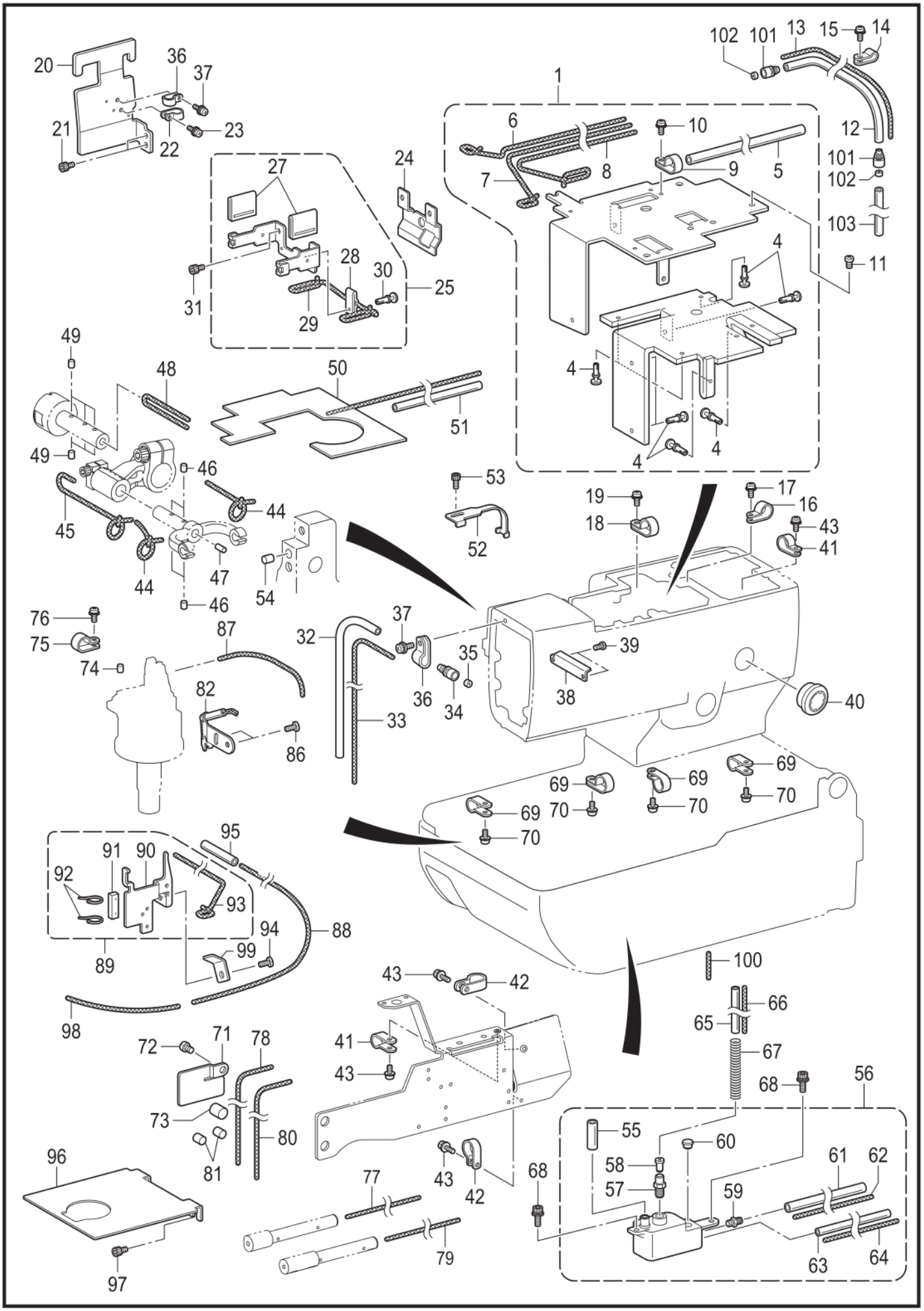
102 101 13 15 14
20 36 37
1
21 22 23
6 10 12
24 27 8 9 5
7 101
102
103
28 30 4
31 29 25 11
49 48 50
4
51
49 46
53 19 17
16
18 43
41
44
45 52
44 47
54
46
76 87 37
75 32 35 39
74 82 36 34 38 40
33
86
69 69 69
69 70 70 70
70
95 91 90
92 93
94 88
89 99
98
100
43 42
66
65
67
72 71 78
41 68 56
43
73 80 55 60
81 58 61 62
96 57 59
43 42 68
77
63 64
97 79

9820-350

## N. 供油润滑装置 / Lubrication

| 参照号 | 零部件序号 | 数量 | 零部件名称 | NAME OF PARTS | RM |
|---|---|---|---|---|---|
| 1 | SA6893001 | 1 | 油板组件 | OIL PLATE ASSY | |
| 4 | S35001000 | 8 | 尼龙铆钉 | NYLON RIVET | |
| 5 | SA6896001 | 1 | 油管 | OIL TUBE | |
| 6 | SA6897001 | 1 | 油线 3X3 | WICK 3X3 | |
| 7 | SA6898001 | 1 | 油线 3X3 | WICK 3X3 | |
| 8 | SA6899001 | 1 | 油线 6X6 | WICK 6X6 | |
| 9 | S00480000 | 1 | 电线夹 #5 | CORD HOLDER, 5N | |
| 10 | 0A4400806 | 1 | 螺栓(带垫圈) M4X8DA | SCREW PAN (S/P WASHER) M4X8 | |
| 11 | 062400816 | 4 | 螺钉 M4X8 | SCREW PAN M4X8 | |
| 12 | SA6900001 | 1 | 油管 | OIL TUBE | |
| 13 | SA6901101 | 1 | 油线 3X3 | WICK 3X3 | |
| 14 | 146202000 | 1 | 尼龙线夹 6N | CORD HOLDER, 6N | |
| 15 | 0A4400806 | 1 | 螺栓(带垫圈) M4X8DA | SCREW PAN (S/P WASHER) M4X8 | |
| 16 | S10243000 | 1 | 尼龙夹 NK-3N | CORD HOLDER, NK-3N | |
| 17 | 0A4400806 | 1 | 螺栓(带垫圈) M4X8DA | SCREW PAN (S/P WASHER) M4X8 | |
| 18 | 149547000 | 1 | 压线板 | CORD HOLDER, 4N | |
| 19 | 0A4400806 | 1 | 螺栓(带垫圈) M4X8DA | SCREW PAN (S/P WASHER) M4X8 | |
| 20 | SA6902001 | 1 | 油管压板 | TUBE SUPPORT | |
| 21 | 018400636 | 2 | 螺栓 M4X6 | BOLT SOCKET M4X6 | |
| 22 | S10243000 | 1 | 尼龙夹 NK-3N | CORD HOLDER, NK-3N | |
| 23 | 0A4400806 | 1 | 螺栓(带垫圈) M4X8DA | SCREW PAN (S/P WASHER) M4X8 | |
| 24 | SA6903001 | 1 | 挡油板 | OIL STOPPER | |
| 25 | SA6904001 | 1 | 油毡压板组件 | FELT HOLDER ASSY | |
| 27 | SA6906001 | 2 | 针杆油毡 | N-BAR YOKE FELT | |
| 28 | SA6907001 | 1 | 角块供油毡 D | SLIDE BLOCK FELT D | |
| 29 | SA6908001 | 1 | 油线 2X2 | WICK 2X2 | |
| 30 | S35001000 | 1 | 尼龙铆钉 | NYLON RIVET | |
| 31 | 018400636 | 2 | 螺栓 M4X6 | BOLT SOCKET M4X6 | |
| 32 | SA6909001 | 1 | 油管 | OIL TUBE | |
| 33 | SA6910001 | 1 | 油线 2X2 | WICK 2X2 | |
| 34 | S56911000 | 1 | 油管接头 S | OIL JOINT S | |
| 35 | S51020000 | 1 | 油芯紧圈 | COLLAR | |
| 36 | S10243000 | 2 | 尼龙夹 NK-3N | CORD HOLDER, NK-3N | |
| 37 | 0A4400806 | 2 | 螺栓(带垫圈) M4X8DA | SCREW PAN (S/P WASHER) M4X8 | |
| 38 | SA6911001 | 1 | 油板 | OIL PLATE | |
| 39 | 062400616 | 2 | 螺钉 M4X6 | SCREW PAN M4X6 | |
| 40 | S49992000 | 1 | 油视窗 | OIL GAUGE WINDOW | |
| 41 | S00480000 | 2 | 电线夹 #5 | CORD HOLDER, 5N | |
| 42 | 552907000 | 2 | 电线夹 #10 | CORD HOLDER #10 | |
| 43 | 0A4400806 | 4 | 螺栓(带垫圈) M4X8DA | SCREW PAN (S/P WASHER) M4X8 | |
| 44 | SA6912001 | 2 | 油线 2X2 | WICK 2X2 | |
| 45 | SA6913001 | 1 | 油线 2X2 | WICK 2X2 | |
| 46 | S29700000 | 4 | 上弯针导向油毡 | FELT | |
| 47 | 153050000 | 1 | 油毡 | S-RACE BASE FELT | |
| 48 | SA6914001 | 1 | 油线 2X2 | WICK 2X2 | |
| 49 | S29700000 | 6 | 上弯针导向油毡 | FELT | |
| 50 | SA6915001 | 1 | 油毡组件 | FELT ASSY | |
| 51 | SA6918001 | 1 | 油管 | OIL TUBE | |
| 52 | SA6919001 | 1 | 油管压板 | TUBE GUIDE | |
| 53 | 018400836 | 1 | 螺栓 M4X8 | BOLT SOCKET M4X8 | |
| 54 | S25328001 | 1 | 油毡 | FELT | |
| 55 | SA8279001 | 1 | 油管 | OIL TUBE | |
| 56 | SA6920001 | 1 | 副油罐总组件 | SUB-TANK UNIT | |
| 57 | SA3040001 | 1 | 油嘴管 | OIL FEEDING PIPE | |
| 58 | SA3060001 | 1 | 油门垫片 | VALVE PACKING | |
| 59 | SA6922001 | 1 | 油口 6.5-3.8 | OIL CONNECROR 6.5-3.8 | |
| 60 | 104450101 | 1 | 橡皮塞 8 | RUBBER CAP, 8 | |
| 61 | SA6923001 | 1 | 油管 | OIL TUBE | |
| 62 | SA6924001 | 1 | 油线 6X6 | WICK 6X6 | |
| 63 | SA6925001 | 1 | 油管 | OIL TUBE | |
| 64 | SA6926001 | 1 | 油线 3X3 | WICK 3X3 | |
| 65 | SA6927001 | 1 | 油管 | OIL TUBE | |
| 66 | SA6928001 | 1 | 油线 6X6 | WICK 6X6 | |

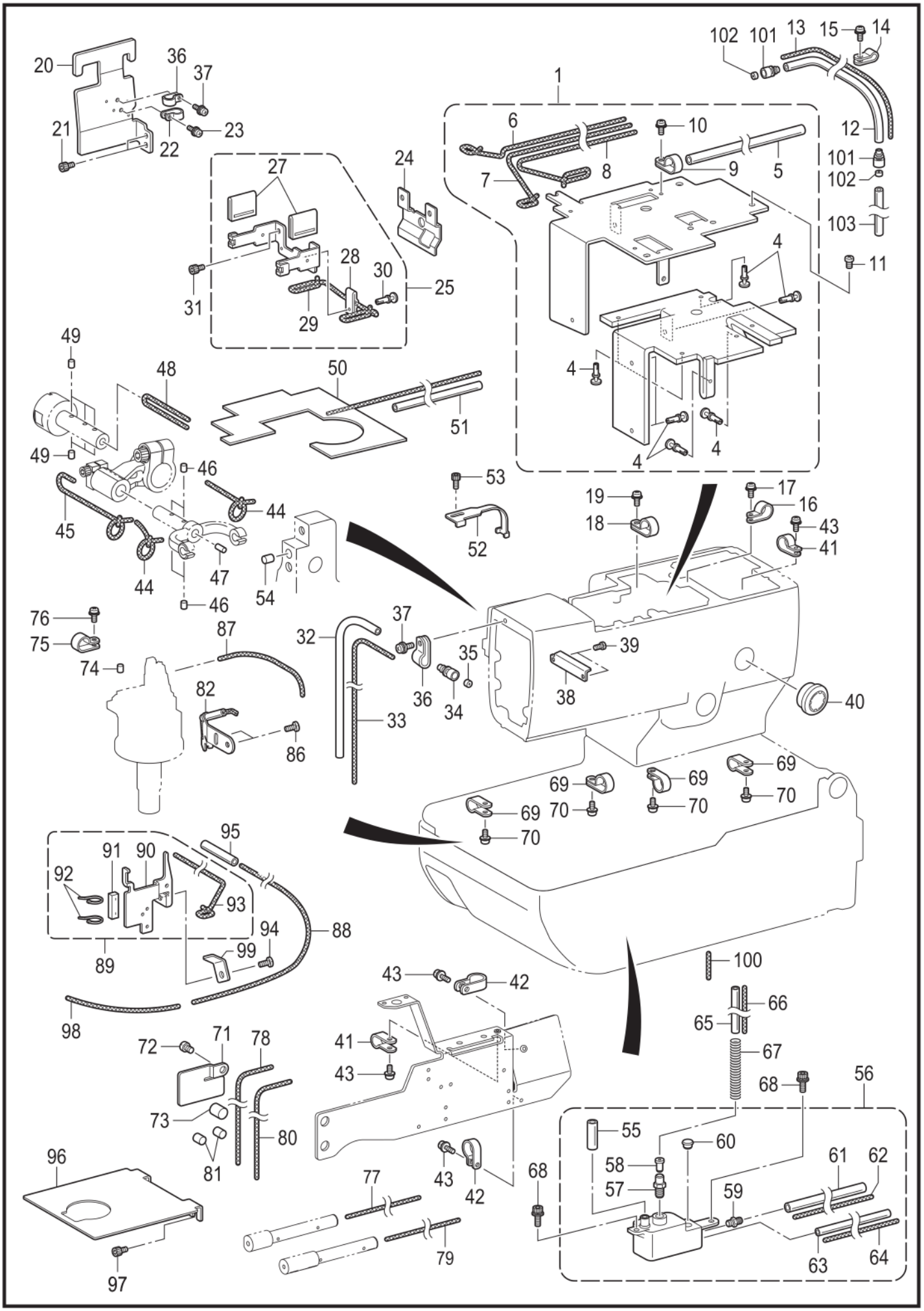
102 101 13 15 14
20 36 37
1
21 22 23
6 10 12
24 27 8 9 5 101
7 102
103
28 30 4
31 25 11
29
49 48 50
4
49 51
46
45 44
4
53 4
19 17
18 16
52 43
41
54 44 47
46
76 37
75 87 32 35 39
74 82 36 34 38 40
33
86
69 69 69
69 70 70 70
70
95 91 90
92 93
94 88
89 99
98
100
43 42
66
65
67
72 71 78 41
68 56
43
73 80 55 60
81 58 61 62
96 57 59
43 42 68
77
63 64
97 79

9820-350

## N. 供油润滑装置 / Lubrication

| 参照号 | 零部件序号 | 数量 | 零部件名称 | NAME OF PARTS | RM |
|---|---|---|---|---|---|
| 67 | SA6929001 | 1 | 油管定位弹簧 | TUBE CLIP SPRING | |
| 68 | S55481001 | 2 | 螺拴(带垫圈) M4X12 | BOLT SOCKET (S/P WASHER)M4X12 | |
| 69 | 149287000 | 4 | 压线板 | CORD HOLDER, 7N | |
| 70 | 0A4400806 | 4 | 螺栓(带垫圈) M4X8DA | SCREW PAN (S/P WASHER) M4X8 | |
| 71 | SA6930001 | 1 | 油管压板 B | TUBE SUPPORT B | |
| 72 | 062500816 | 1 | 螺钉 M5X8 | SCREW PAN M5X8 | |
| 73 | S25328001 | 1 | 油毡 | FELT | |
| 74 | 112753001 | 1 | 油毡 | FELT | |
| 75 | S00480000 | 1 | 电线夹 #5 | CORD HOLDER, 5N | |
| 76 | 0A4400806 | 1 | 螺栓(带垫圈) M4X8DA | SCREW PAN (S/P WASHER) M4X8 | |
| 77 | SA6886001 | 1 | 油线 2X2 | WICK 2X2 | |
| 78 | SA5567001 | 1 | 油线 2X2 | WICK 2X2 | |
| 79 | SA5566001 | 1 | 油线 2X2 | WICK 2X2 | |
| 80 | SA5567001 | 1 | 油线 2X2 | WICK 2X2 | |
| 81 | 107155001 | 2 | 油毡 | FELT | |
| 82 | SA6932001 | 1 | 弯针座供油组件 | LOOPER BASE OIL PLATE ASSY | |
| 86 | 060400516 | 2 | 螺钉 M4X5 | SCREW BIND M4X5 | |
| 87 | SA6936001 | 1 | 油线 | WICK | |
| 88 | SA6937101 | 1 | 油线 2X2 | WICK 2X2 | |
| 89 | SA6938001 | 1 | 芯线板组件 | GIMP THREAD WASTE PLATE ASSY | |
| 90 | SA6939001 | 1 | 芯线板 | GIMP THREAD WASTE PLATE | |
| 91 | SA6940001 | 1 | 弯针油毡 | LOOPER LINK FELT | |
| 92 | 228475000 | 2 | 电线夹 1.9X80 | FASTENING BAND 1.9X80 | |
| 93 | SA6941001 | 1 | 油线 2X2 | WICK 2X2 | |
| 94 | 060400816 | 1 | 螺钉 M4X8 | SCREW BIND M4X8 | |
| 95 | SA7178001 | 1 | 油管 | OIL TUBE | |
| 96 | SA6942001 | 1 | 隔板 | PARTITION | |
| 97 | 018400636 | 2 | 螺栓 M4X6 | BOLT SOCKET M4X6 | |
| 98 | SA8009001 | 1 | 油线 | WICK | |
| 99 | S02657101 | 1 | 油线夹板 | CORD HOLDER | |
| 100 | SA8011001 | 1 | 油线 6X6 | WICK 6X6 | |
| 101 | S56911000 | 2 | 油管接头 S | OIL JOINT S | |
| 102 | S51020000 | 2 | 油芯紧圈 | COLLAR | |
| 103 | SA8101001 | 1 | 油管 | OIL TUBE | |

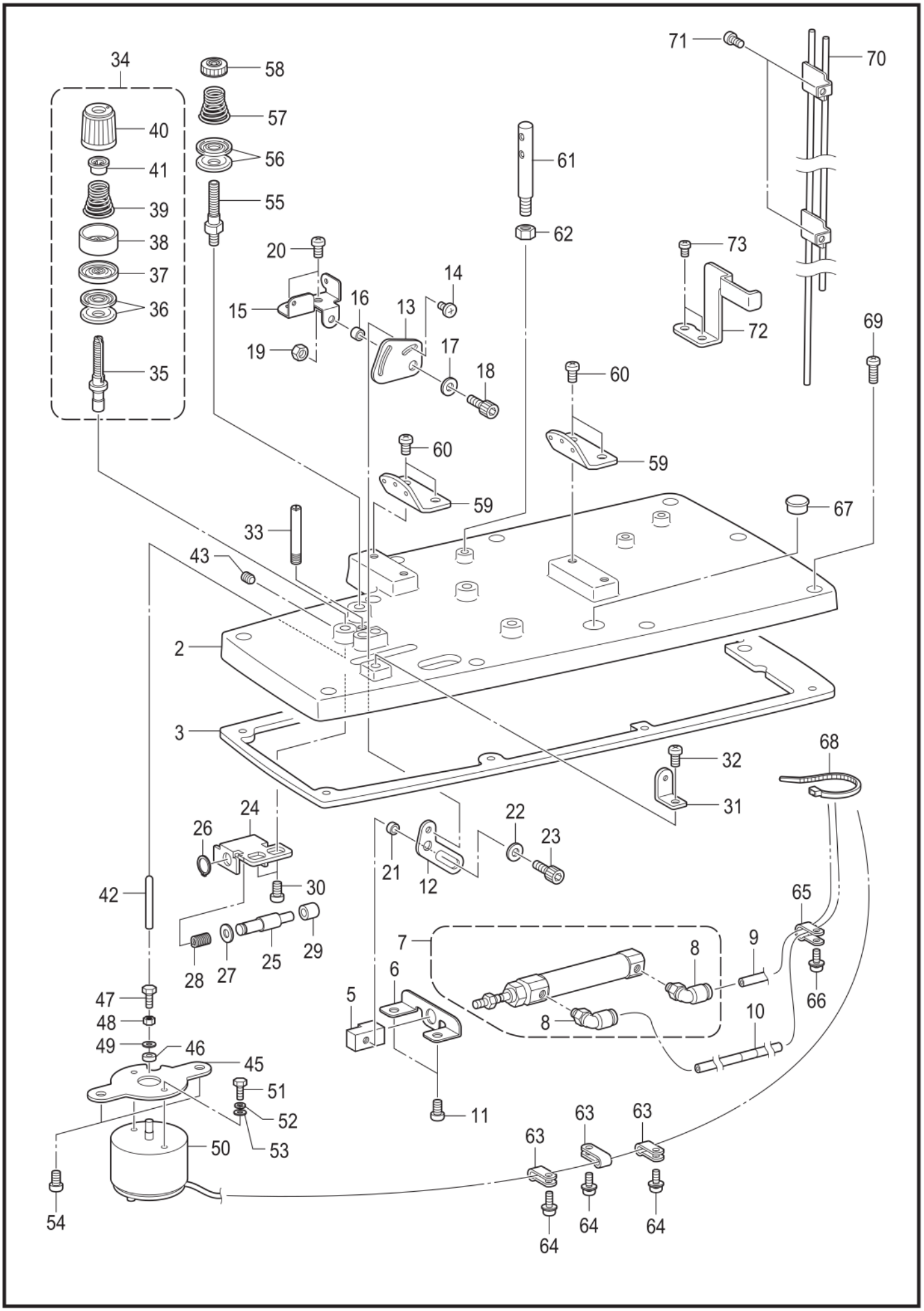
34
58
57
56
55
40
41
39
38
37
36
35
20
15
16
13
14
19
17
18
61
62
71
70
73
72
69
60
59
60
59
67
33
43
2
3
32
31
68
24
26
22
23
21
12
30
42
65
7
8
9
6
5
8
66
10
47
48
49
46
45
51
52
53
50
11
63
63
63
64
64
64
54

9820-401

## P1. 穿线装置 / Threading mechanism

| 参照号 | 零部件序号 | 数量 | 零部件名称 | NAME OF PARTS | RM |
|---|---|---|---|---|---|
| 2 | SA6944001 | 1 | 上盖 | TOP COVER | |
| 3 | SA6945001 | 1 | 上盖垫片 | PACKING TOP COVER | |
| 5 | SA6947101 | 1 | 气缸接头 A | CYLINDER JOINT A | |
| 6 | SA6948101 | 1 | 气缸安装板 A | CYLINDER SETTING PLATE A | |
| 7 | SA6949001 | 1 | 气缸组件 10-30 | CYLINDER ASSY 10-30 | |
| 8 | S11426000 | 2 | 弯管接头 4M5 | ELBOW UNION 4M5 | |
| 9 | SA6950001 | 1 | 空气管 4X2.5-11 | AIR TUBE 4X2.5-11 | |
| 10 | SA7134001 | 1 | 空气管 4X2.5-12 | AIR TUBE 4X2.5-12 | |
| 11 | 062500816 | 2 | 螺钉 M5X8 | SCREW PAN M5X8 | |
| 12 | SA6951001 | 1 | 取线手杆驱动板 | T-TAKE-UP LEVER DRIVING PLATE | |
| 13 | SA6952001 | 1 | 取线手杆板 | THREAD TAKE-UP LEVER PLATE | |
| 14 | 060400516 | 1 | 螺钉 M4X5 | SCREW BIND M4X5 | |
| 15 | SA6953001 | 1 | 取线手杆基台 | THREAD TAKE-UP LEVER BASE | |
| 16 | SA6954001 | 1 | 管套 A | COLLAR A | |
| 17 | SA7494001 | 1 | 垫圈 | WASHER | |
| 18 | 018401036 | 1 | 螺栓 M4X10 | BOLT SOCKET M4X10 | |
| 19 | 021400206 | 1 | 六角螺母 M4 | NUT 2 M4 | |
| 20 | 062500816 | 2 | 螺钉 M5X8 | SCREW PAN M5X8 | |
| 21 | SA6955001 | 1 | 管套 B | COLLAR B | |
| 22 | SA7494001 | 1 | 垫圈 | WASHER | |
| 23 | 018401036 | 1 | 螺栓 M4X10 | BOLT SOCKET M4X10 | |
| 24 | SA6956101 | 1 | 冲击支撑板 | IMPACT SUPPORT PLATE | |
| 25 | SA6957001 | 1 | 冲击支撑杆 | IMPACT SUPPORT SHAFT | |
| 26 | 048060142 | 1 | 轴用挡圈 C6 | RETAINING RING EXTERNAL C6 | |
| 27 | 025060236 | 1 | 平垫圈 M6 | WASHER PLAIN M 6 | |
| 28 | SA6958001 | 1 | 压簧 A | SPRING COMPRESSION A | |
| 29 | S05356000 | 1 | 扣夹 A | BUTTON CLAMP, A | |
| 30 | 062500816 | 2 | 螺钉 M5X8 | SCREW PAN M5X8 | |
| 31 | SA6959001 | 1 | 面线导向 A | UPPER THREAD GUIDE A | |
| 32 | 062500816 | 1 | 螺钉 M5X8 | SCREW PAN M5X8 | |
| 33 | SA6960101 | 1 | 线导向杆 A | THREAD GUIDE ROD A | |
| 34 | SA6961001 | 1 | 夹线器组件 U | TENSION U ASSY | |
| 35 | SA6962001 | 1 | 夹线螺杆 U | TENSION STUD U | |
| 36 | 145446001 | 2 | 夹线盘 | DISC, TENSION | |
| 37 | 159805001 | 1 | 夹线压盘 | TENSION DISC PRESSER | |
| 38 | 144103009 | 1 | 压线圈 | TENSION DISC PRESSER | |
| 39 | 159221101 | 1 | 调节弹簧 | TENSION SPRING | |
| 40 | S20682102 | 1 | 调节螺母 | TENSION NUT | |
| 41 | S20681000 | 1 | 调节弹簧垫圈 | WASHER | |
| 42 | 152873001 | 1 | 松线销 | TENSION RELEASE PIN | |
| 43 | 012500536 | 1 | 螺钉 M5X5 | SET SCREW SOCKET (FT) M5X5 | |
| 45 | SA3345001 | 1 | 电磁铁安装板 | SETTING PLATE,SOLENOID | |
| 46 | 154599000 | 1 | 电磁铁缓冲垫圈 | SOLENOID CUSHION | |
| 47 | 017401415 | 1 | 螺栓 M4X14 | BOLT M4X14 | |
| 48 | 021400306 | 1 | 六角螺母 M4 | NUT 3 M4 | |
| 49 | 102707002 | 1 | 垫圈 4 | WASHER | |
| 50 | SA6538001 | 1 | 面线松线电磁铁 | U-TENSION RELEASE SOLENOID | |
| 51 | 017400802 | 2 | 螺栓 M4X8 | BOLT M4X8 | |
| 52 | 028040246 | 2 | 弹簧垫圈 2-4 | WASHER SPRING 2-4 | |
| 53 | 025040236 | 2 | 平垫圈 M4 | WASHER PLAIN M 4 | |
| 54 | 062500816 | 2 | 螺钉 M5X8 | SCREW PAN M5X8 | |
| 55 | S20698221 | 1 | 夹线螺杆 | TENSION STUD | |
| 56 | 144504001 | 2 | 导向盘 | THREAD GUIDE DISC | |
| 57 | 154562101 | 1 | 小夹线弹簧 B | PRE-TENSION SPRING B | |
| 58 | 155510001 | 1 | 夹线螺母 | TENSION NUT | |
| 59 | SA6963001 | 2 | 三眼导线板 | SEWING THREAD RETAINER GUIDE | |
| 60 | 062500816 | 4 | 螺钉 M5X8 | SCREW PAN M5X8 | |
| 61 | SA5568001 | 1 | 穿线杆 | THREAD SPOOL PIN | |
| 62 | 021500216 | 1 | 六角螺母 M5 | NUT 1 M5 | |
| 63 | 149547000 | 3 | 压线板 | CORD HOLDER, 4N | |
| 64 | 0A4400806 | 3 | 螺栓(带垫圈) M4X8DA | SCREW PAN (S/P WASHER) M4X8 | |
| 65 | S00480000 | 1 | 电线夹 #5 | CORD HOLDER, 5N | |
| 66 | 0A4400806 | 1 | 螺栓(带垫圈) M4X8DA | SCREW PAN (S/P WASHER) M4X8 | |

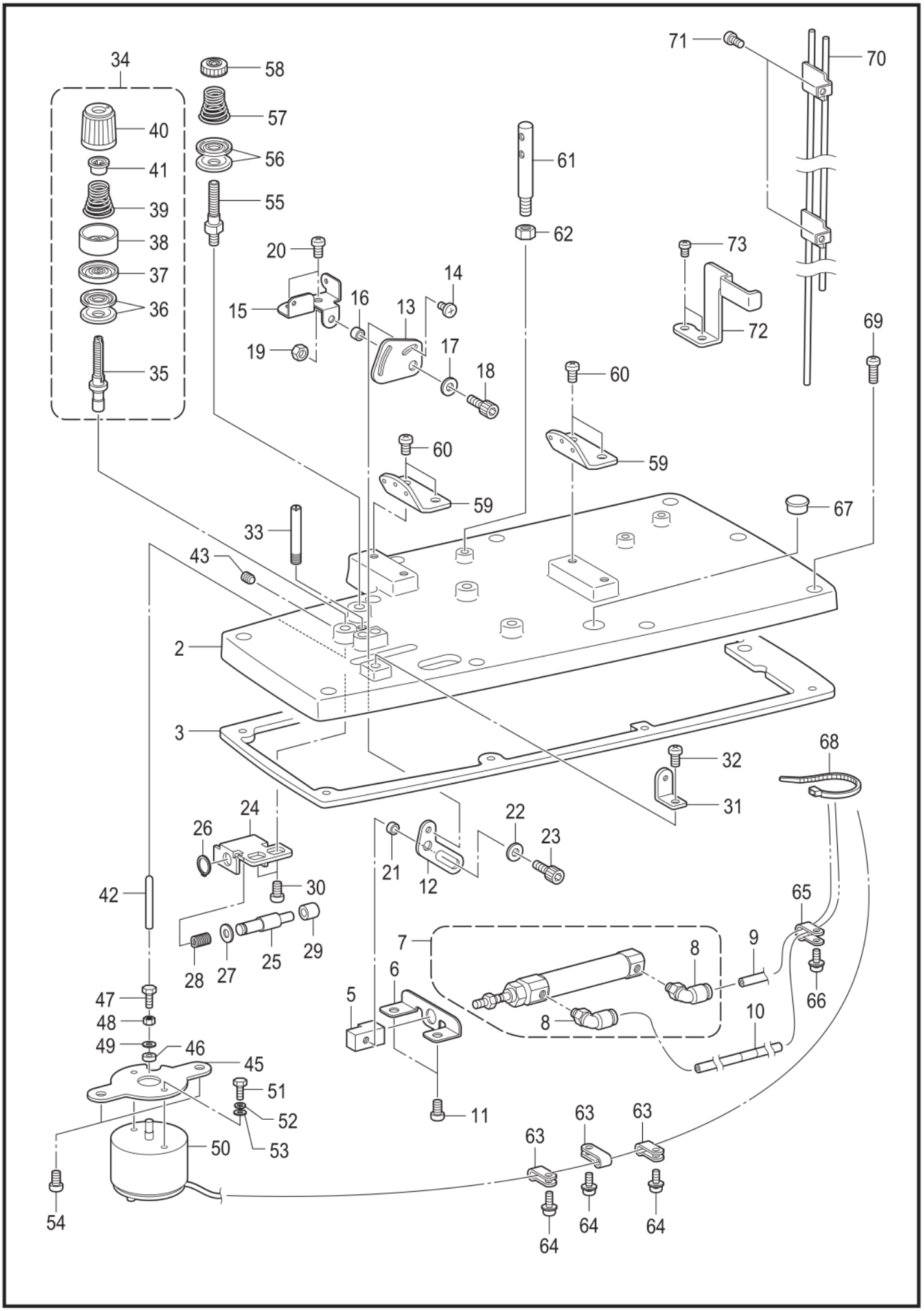
71
70
34
58
57
56
40
41
39
38
37
36
35
55
61
62
73
72
20
14
15
16
13
19
17
18
60
59
69
67
33
43
2
3
32
31
68
24
26
22
23
21
12
30
42
65
7
8
9
6
5
66
10
47
48
49
46
45
51
52
53
50
11
63
64
54

9820-401

## P1. 穿线装置 / Threading mechanism

| 参照号 | 零部件序号 | 数量 | 零部件名称 | NAME OF PARTS | RM |
|---|---|---|---|---|---|
| 67 | 104821001 | 1 | 橡皮塞 10.5 | RUBBER CAP, 10.5 | |
| 68 | 228475000 | 1 | 电线夹 1.9X80 | FASTENING BAND 1.9X80 | |
| 69 | 062501216 | 9 | 螺钉 M5X12 | SCREW PAN M5X12 | |
| 70 | SA6965001 | 1 | 2连线导向管 | 2 PEDAL THREAD GUIDE PIPE | |
| 71 | 062500816 | 2 | 螺钉 M5X8 | SCREW PAN M5X8 | |
| 72 | SA6966001 | 1 | 导向管基座 | PIPE CLAMP PLATE | |
| 73 | 062400816 | 2 | 螺钉 M4X8 | SCREW PAN M4X8 | |

< -00, -02 >

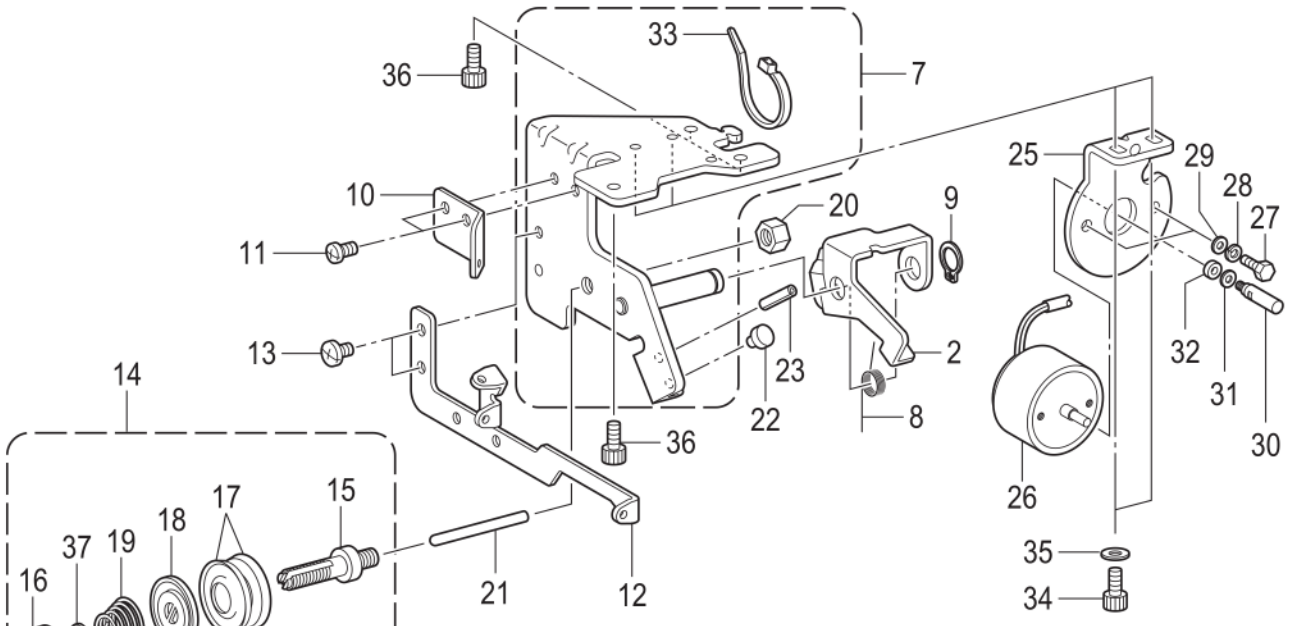


< -01 >

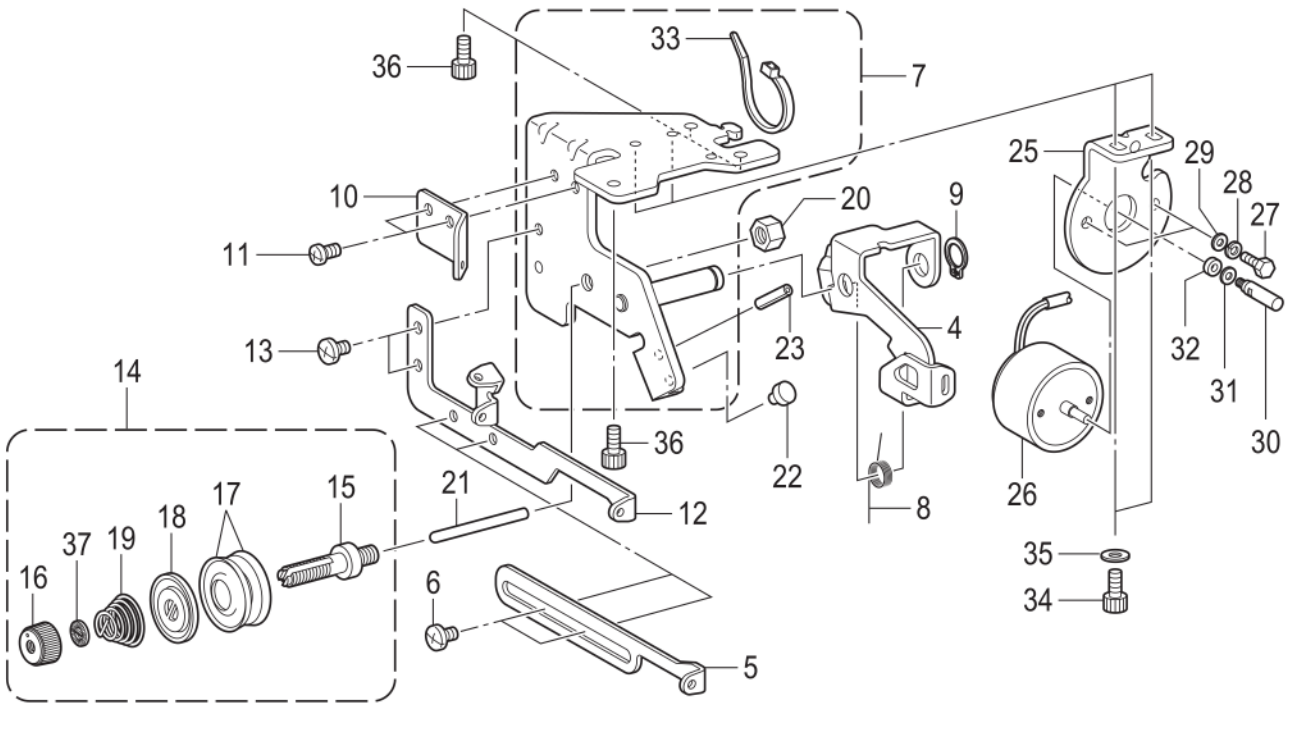


9820-401

## P2. 穿线装置 / Threading mechanism

| 参照号 | 零部件序号 | 数量 | 零部件名称 | NAME OF PARTS | RM |
|---|---|---|---|---|---|
| | | | <用于-00和-02> | <For -00 & -02> | |
| 2 | SA7067101 | 1 | 底线松线板 | L-THREAD RELEASE PLATE | |
| | | | <用于-01> | <For -01> | |
| 4 | SA6971001 | 1 | 底线取线手柄 | L-THREAD TAKE-UP GUIDE LENER | |
| 5 | SA6974001 | 1 | 底线导向 C | LOWER THREAD GUIDE C | |
| 6 | 060400516 | 2 | 螺钉 M4X5 | SCREW BIND M4X5 | |
| 7 | SA6969101 | 1 | 底线调节板 | L-THREAD GUIDE ADJUST PLATE | |
| 8 | SA6970001 | 1 | 弹簧 B | TWIST SPRING B | |
| 9 | 048080142 | 1 | 轴用挡圈 C8 | RETAINING RING EXTERNAL C8 | |
| 10 | SA6972001 | 1 | 底线导向 A | LOWER THREAD GUIDE A | |
| 11 | 062400816 | 2 | 螺钉 M4X8 | SCREW PAN M4X8 | |
| 12 | SA6973001 | 1 | 底线导向 B | LOWER THREAD GUIDE B | |
| 13 | 060400516 | 2 | 螺钉 M4X5 | SCREW BIND M4X5 | |
| 14 | SA7175201 | 1 | 底线夹线杆组件 | L-THREAD TENSION SHAFT ASSY | |
| 15 | SA6975101 | 1 | 底线夹线杆 D | TENSION STUD D | |
| 16 | SA8094001 | 1 | 调节螺母 | TENSION NUT | |
| 17 | 145446001 | 2 | 夹线盘 | DISC, TENSION | |
| 18 | 159805001 | 1 | 夹线压盘 | TENSION DISC PRESSER | |
| 19 | 154562101 | 1 | 小夹线弹簧 B | PRE-TENSION SPRING B | |
| 20 | SA3227001 | 1 | 螺母 M6 | NUT(FT),M6 | |
| 21 | SA6977001 | 1 | 松线销 | TENSION RELEASE PIN | |
| 22 | S52431000 | 1 | 剪刀定位 | U-THREAD TRIMMER STOPPER | |
| 23 | 047301042 | 1 | 弹簧销 AW3 | PIN SPRING ROLL AW3 | |
| 25 | SA6979001 | 1 | 松线电磁铁安装板 | LOWER SOLENOID SETTING PLATE | |
| 26 | SA6539001 | 1 | 松线电磁铁 | L-TENSION RELEASE SOLENOID | |
| 27 | 017400802 | 2 | 螺栓 M4X8 | BOLT M4X8 | |
| 28 | 028040246 | 2 | 弹簧垫圈 2-4 | WASHER SPRING 2-4 | |
| 29 | 025040236 | 2 | 平垫圈 M4 | WASHER PLAIN M 4 | |
| 30 | SA6980001 | 1 | 电磁铁轴 | LOWER SOLENOID SHAFT | |
| 31 | 155559001 | 1 | 平垫圈 | WASHER PLAIN | |
| 32 | 154599000 | 1 | 电磁铁缓冲垫圈 | SOLENOID CUSHION | |
| 33 | S04159000 | 1 | 线夹 1M | BAND, 1M | |
| 34 | 018400836 | 2 | 螺栓 M4X8 | BOLT SOCKET M4X8 | |
| 35 | 026040136 | 2 | 平垫圈 S4 | WASHER PLAIN S 4 | |
| 36 | 018400836 | 3 | 螺栓 M4X8 | BOLT SOCKET M4X8 | |
| 37 | SA8095001 | 1 | 垫圈 | WASHER | |

**< -01 用于芯线 / For -01 gimp thread >**

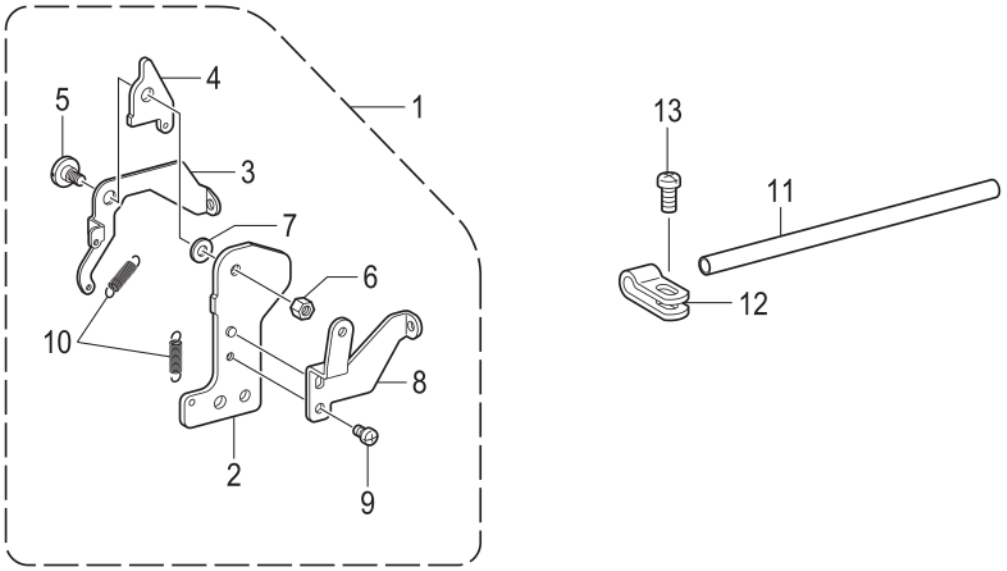


**< -00, -02 用于芯线 / For -00 & -02 gimp thread >**

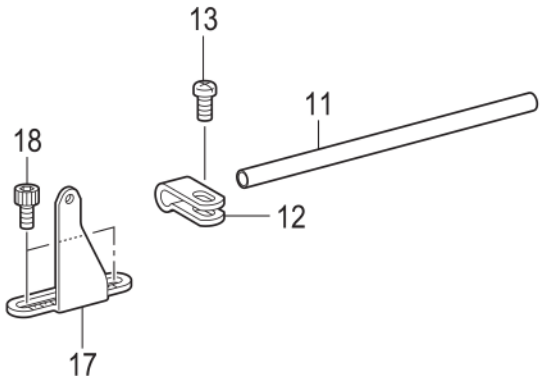


**< 用于底线 / For lower thread >**

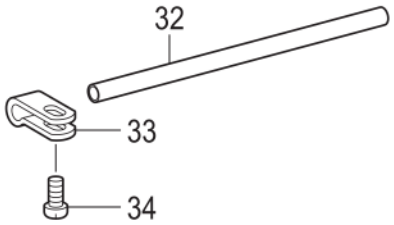


**< -02 用于芯线 / For -02 gimp thread >**

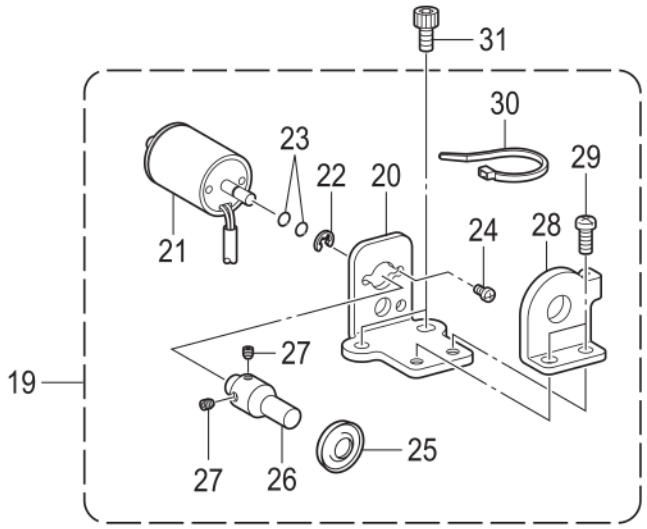


9820-401

## P3. 穿线装置 / Threading mechanism

| 参照号 | 零部件序号 | 数量 | 零部件名称 | NAME OF PARTS | RM |
|---|---|---|---|---|---|
| | | | <-01用于芯线> | <For -01 gimp thread> | |
| 1 | SA7068001 | 1 | 芯线过线手柄组件 | GIMP THREAD TAKE-UP G-L ASSY | |
| 2 | SA7069001 | 1 | 芯线过线架 | GIMP THREAD TAKE-UP G-HOLDER | |
| 3 | SA7070001 | 1 | 芯线过线板 | G-THREAD TAKE-UP GUIDE PLATE | |
| 4 | SA7071001 | 1 | 芯线过线作动板 | GIMP THREAD TAKE-UP G-E PLATE | |
| 5 | SA7072001 | 1 | 段螺钉 M4 | SHOULDER SCREW M4 | |
| 6 | 021400306 | 1 | 六角螺母 M4 | NUT 3 M4 | |
| 7 | 158722001 | 1 | 垫圈 4.2 | WASHER PLAIN 4.2 | |
| 8 | SA7073001 | 1 | 芯线导向 | GIMP THREAD GUIDE | |
| 9 | 062300416 | 1 | 螺钉 M3X4 | SCREW PAN M3X4 | |
| 10 | SA7074001 | 2 | 弹簧 | SPRING TORSION | |
| 11 | SA6981001 | 1 | 芯线导向管 | GIMP THREAD GUIDE PIPE | |
| 12 | S20696001 | 1 | 导线管夹 | THREAD GUIDE PIPE SUPPORT | |
| 13 | 062400816 | 1 | 螺钉 M4X8 | SCREW PAN M4X8 | |
| | | | <-00和02用于芯线> | <For -00 & -02 gimp thread> | |
| 11 | SA6981001 | 1 | 芯线导向管 | GIMP THREAD GUIDE PIPE | |
| 12 | S20696001 | 1 | 导线管夹 | THREAD GUIDE PIPE SUPPORT | |
| 13 | 062400816 | 1 | 螺钉 M4X8 | SCREW PAN M4X8 | |
| 17 | SA6982001 | 1 | 芯线导向 J | GIMP THREAD GUIDE J | |
| 18 | 018400836 | 2 | 螺栓 M4X8 | BOLT SOCKET M4X8 | |
| | | | <-02用于芯线> | <For -02 gimp thread> | |
| 19 | SA6983101 | 1 | 芯线夹组件 | GIMP THREAD CLAMP ASSY | |
| 20 | SA6984001 | 1 | 芯线夹板 | GIMP THREAD CLAMP PLATE | |
| 21 | SA6537001 | 1 | 芯线电磁铁 | GIMP THREAD SOLENOID | |
| 22 | 048025346 | 1 | 挡圈 E2.5 | RETAINING RING E2.5 | |
| 23 | 081003870 | 2 | O形圈 S3 | O RING S3 | |
| 24 | 062260406 | 2 | 螺钉 M2.6X4 | SCREW PAN M2.6X4 | |
| 25 | 145446002 | 1 | 夹线盘 | DISC, TENSION | |
| 26 | SA6986101 | 1 | 芯线轴 | GIMP THREAD SHAFT | |
| 27 | 014300332 | 2 | 螺钉 M3X3 | SET SCREW SOCKET (CP) M3X3 | |
| 28 | SA6987001 | 1 | 芯线夹 | GIMP THREAD CLAMP | |
| 29 | 062400816 | 2 | 螺钉 M4X8 | SCREW PAN M4X8 | |
| 30 | S04557000 | 1 | 电线夹 PLT1M | BAND, PLT1M | |
| 31 | 018400836 | 2 | 螺栓 M4X8 | BOLT SOCKET M4X8 | |
| | | | <用于底线> | <For lower thread> | |
| 32 | SA6981001 | 1 | 芯线导向管 | GIMP THREAD GUIDE PIPE | |
| 33 | S20696001 | 1 | 导线管夹 | THREAD GUIDE PIPE SUPPORT | |
| 34 | 062400816 | 1 | 螺钉 M4X8 | SCREW PAN M4X8 | |

< -01 >

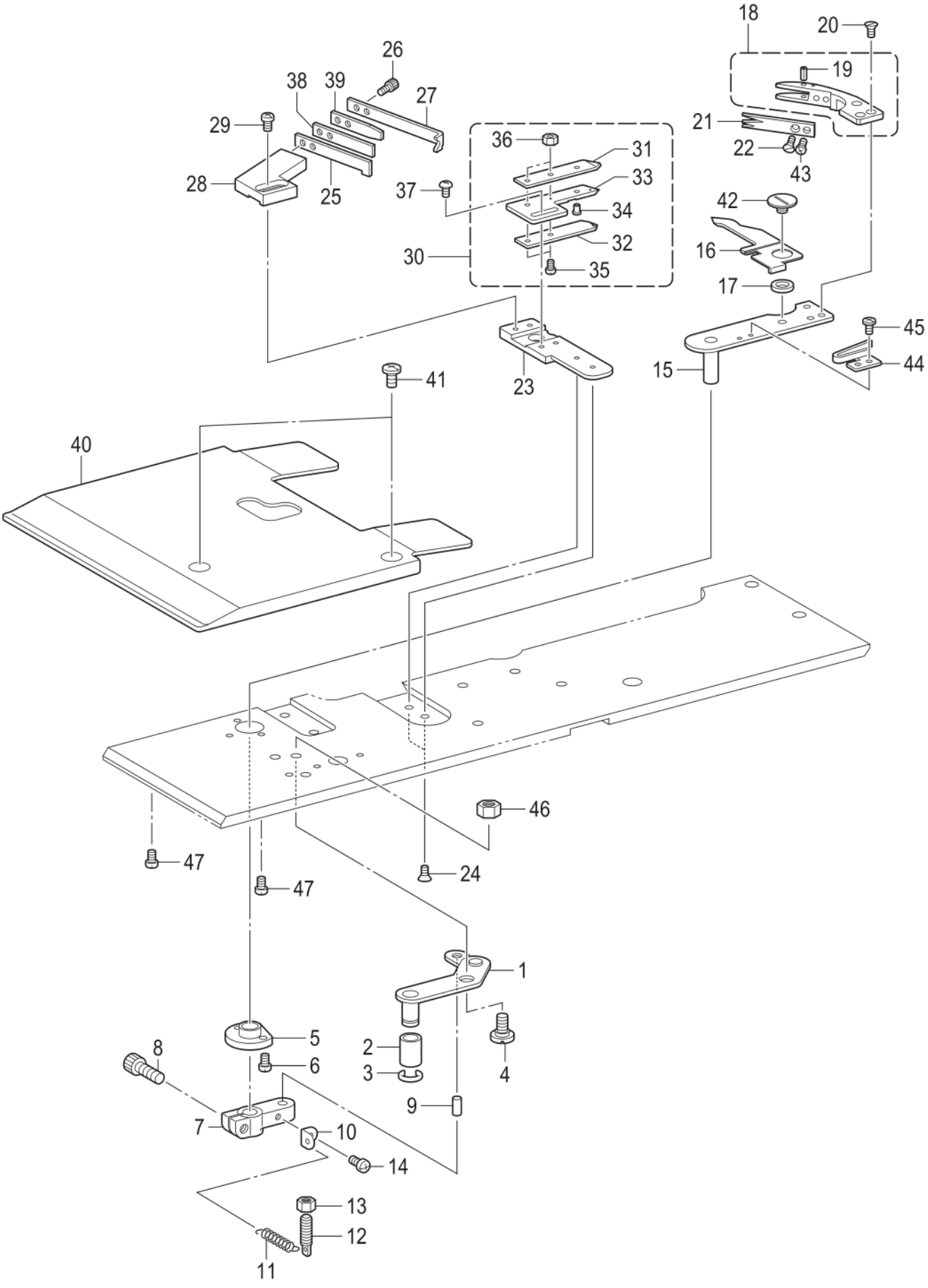
18
20
19
21
22
43
26
38
39
27
29
28
25
36
31
33
37
34
32
30
35
42
16
17
45
44
15
41
23
40
46
47
47
24
1
5
8
6
2
3
4
9
7
10
14
13
12
11

9820-403

## Q1. 切线装置 / Thread trimmer mechanism

| 参照号 | 零部件序号 | 数量 | 零部件名称 | NAME OF PARTS | RM |
|---|---|---|---|---|---|
| | | | <用于-01> | <For -01> | |
| 1 | SA7526001 | 1 | 切线连接杆组件 | THREAD TRIMMER LINK LEVER ASSY | |
| 2 | SA7778001 | 1 | 连接杆滚轮 | LINK LEVER ROLLER | |
| 3 | 137191051 | 1 | 挡圈 | STOP RING | |
| 4 | SA5693001 | 1 | 段螺钉 M4 | SHOULDER SCREW M4 | |
| 5 | S34906100 | 1 | 切线臂管套 | BUSH TR TRIMMER ARM | |
| 6 | 062260516 | 2 | 螺钉 M2.6X5 | SCREW PAN M2.6X5 | |
| 7 | S34905101 | 1 | 切线杆臂 | THREAD CUTTER LEVER ARM | |
| 8 | 018401036 | 1 | 螺栓 M4X10 | BOLT SOCKET M4X10 | |
| 9 | S37858000 | 1 | 针销 4X8 | NEEDLE PIN, 4X8 | |
| 10 | S34903001 | 1 | 弹簧挂钩 | SPRING HOOK | |
| 11 | S34883001 | 1 | 切线弹簧 | SPRING, EXTENSION | |
| 12 | S34902001 | 1 | 弹簧挂钩 | SPRING HOOK | |
| 13 | 021350106 | 1 | 螺母 M3.5 | NUT 1 M3.5 | |
| 14 | 062260516 | 1 | 螺钉 M2.6X5 | SCREW PAN M2.6X5 | |
| 15 | S34901001 | 1 | 切线臂 | THREAD TRIMMER ARM | |
| 16 | S34900001 | 1 | 分线板 | OPENER, ;T-NIPPER | |
| 17 | 153219001 | 1 | 动刀管套 | COLLAR, ;MOVABLE KNIFE | |
| 18 | S34899001 | 1 | 动刀组件 | MOVABLE KNIFE ASSY | |
| 19 | S34898001 | 1 | 弹簧销 1.4 | PIN, SPRING 1.4 | |
| 20 | 141542001 | 3 | 螺钉 3.18 | SCREW 3.18 | |
| 21 | SA7076001 | 1 | 挡线器 | THREAD HANDLER | |
| 22 | S01694001 | 1 | 螺钉 SM2.38X4 | SCREW, FLAT SM2.38X4 | |
| 23 | S34896001 | 1 | 定刀台座 | BRACKET, ;FIXED KNIFE | |
| 24 | 061300416 | 2 | 螺钉 M3X4 | SCREW FLAT M3X4 | |
| 25 | S34895001 | 1 | 定刀 | FIXED KNIFE | |
| 26 | 018260832 | 2 | 螺栓 M2.6X8 | BOLT, SOCKET M2.6X8 | |
| 27 | S34894001 | 1 | 线导向板 | THREAD GUIDE PLATE | |
| 28 | S34893001 | 1 | 定刀安装板 | SETTING BRACKET FIXED KNIFE | |
| 29 | 062300512 | 2 | 螺钉 M3X5 | SCREW PAN M3X5 | |
| 30 | S34889101 | 1 | 夹线组件 | THREAD NIPPER ASSY | |
| 31 | S34890001 | 1 | 夹线 U | THREAD NIPPER, U | |
| 32 | S34891101 | 1 | 夹线 D | THREAD NIPPER, D | |
| 33 | S34888101 | 1 | 夹线 M | THREAD NIPPER, M | |
| 34 | S34892001 | 1 | 分线销 | OPENER PIN | |
| 35 | 062020416 | 2 | 螺钉 M2X4 | SCREW PAN M2X4 | |
| 36 | 021020106 | 2 | 螺母 M2 | NUT 1 M2 | |
| 37 | 542515001 | 2 | 螺母 M2.6X3.5 | SCREW M2.6X3.5 | |
| 38 | S34887001 | 1 | 定刀板弹簧 | SPRING, PLATE ;F-KNIFE | |
| 39 | S34886001 | 1 | 定刀板弹簧 U | SPRING, U PLATE ;F-KNIFE | |
| 40 | SA7077001 | 1 | 压板 U | PRESSER PLATE U | |
| 41 | 060400516 | 2 | 螺钉 M4X5 | SCREW BIND M4X5 | |
| 42 | 152904001 | 1 | 螺钉 SM4.37 | SCREW, SM4.37 | |
| 43 | 104336003 | 1 | 螺钉 SM2.38 | SCREW, SM2.38 | |
| 44 | S34884000 | 1 | 分线器弹簧 | OPENER SPRING | |
| 45 | 060630312 | 2 | 螺钉 SM2.38-56X3 | SCREW BIND SM2.38-56X3 | |
| 46 | 021400306 | 1 | 六角螺母 M4 | NUT 3 M4 | |
| 47 | 062300416 | 2 | 螺钉 M3X4 | SCREW PAN M3X4 | |

< -02 >

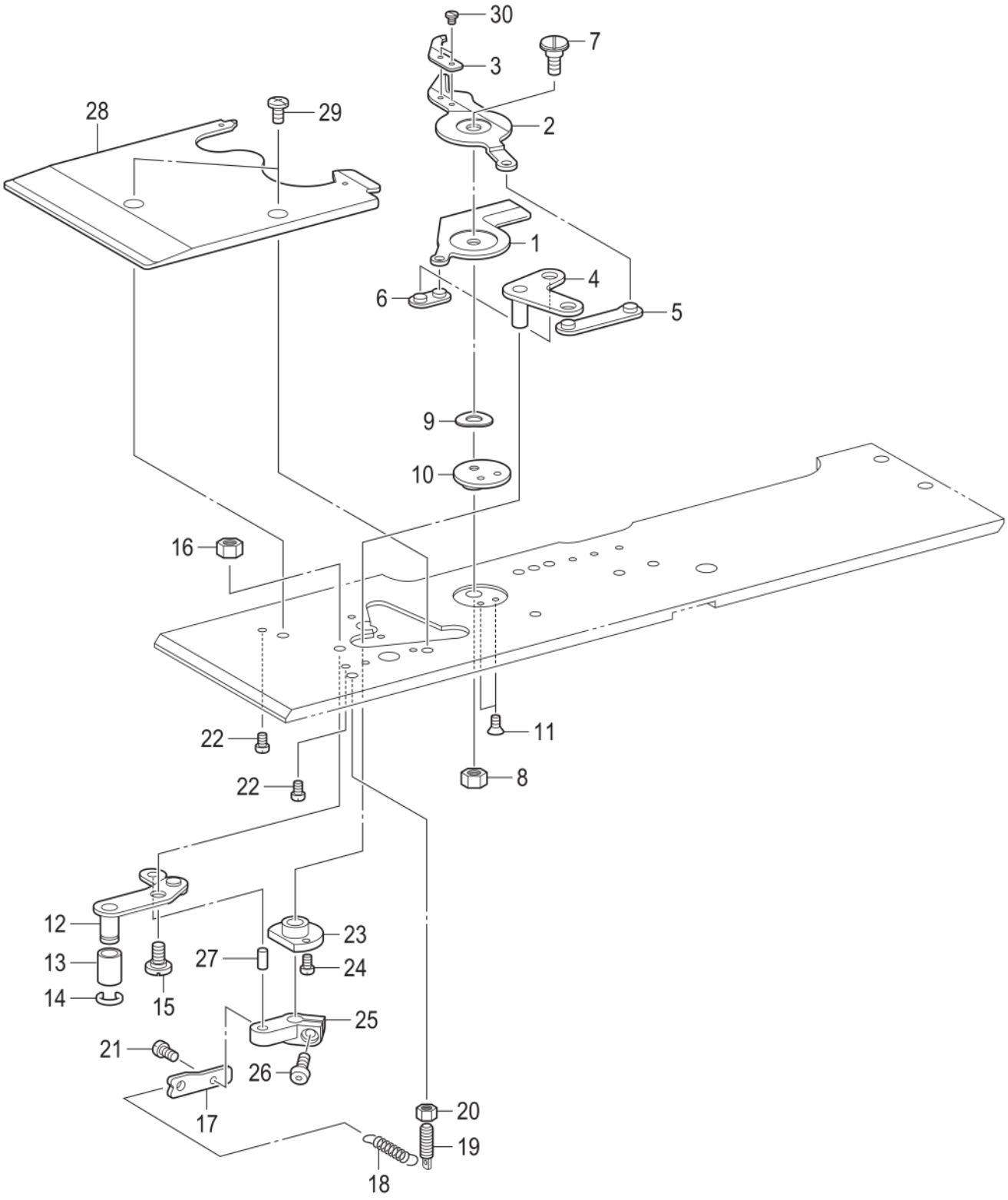
30
7
3
28
29
2
1
6
4
5
9
10
16
22
11
22
8
12
23
13
27
24
14
15
25
21
26
17
20
19
18

9820-403

## Q2. 切线装置 / Thread trimmer mechanism

| 参照号 | 零部件序号 | 数量 | 零部件名称 | NAME OF PARTS | RM |
|---|---|---|---|---|---|
| | | | <用于-02> | <For -02> | |
| 1 | SA6988001 | 1 | 动刀 R | MOVABLE KNIFE R | |
| 2 | SA6989001 | 1 | 动刀 L | MOVABLE KNIFE L | |
| 3 | SA6990101 | 1 | 挡线器 | THREAD HANDLER | |
| 4 | SA6991001 | 1 | 动刀驱动板 | MOVABLE KNIFE DRIVING PLATE | |
| 5 | SA6992001 | 1 | 切线连接组件 A | THREAD TRIMMER LINK A ASSY | |
| 6 | SA6994001 | 1 | 切线连接组件 B | THREAD TRIMMER LINK B ASSY | |
| 7 | S37660101 | 1 | 段螺钉 M4 | SHOULDER SCREW, M4 | |
| 8 | 021400202 | 1 | 六角螺母 M4 | NUT 2 M4 | |
| 9 | S37654000 | 1 | 波纹垫圈 | WAVE WASHER | |
| 10 | S37655101 | 1 | 切刀支撑圈 | KNIFE SUPPORT WASHER | |
| 11 | 141542001 | 2 | 螺钉 3.18 | SCREW 3.18 | |
| 12 | SA6996001 | 1 | 切线连接杆组件 J | THREAD TRIMMER L-LEVER J ASSY | |
| 13 | SA7778001 | 1 | 连接杆滚轮 | LINK LEVER ROLLER | |
| 14 | 137191051 | 1 | 挡圈 | STOP RING | |
| 15 | SA5693001 | 1 | 段螺钉 M4 | SHOULDER SCREW M4 | |
| 16 | 021400306 | 1 | 六角螺母 M4 | NUT 3 M4 | |
| 17 | SA6998101 | 1 | 弹簧挂钩 | SPRING HOOK | |
| 18 | SA6999101 | 1 | 切线弹簧 | THREAD TRIMMER SPRING | |
| 19 | S34902001 | 1 | 弹簧挂钩 | SPRING HOOK | |
| 20 | 021350106 | 1 | 螺母 M3.5 | NUT 1 M3.5 | |
| 21 | 062260516 | 1 | 螺钉 M2.6X5 | SCREW PAN M2.6X5 | |
| 22 | 062300416 | 2 | 螺钉 M3X4 | SCREW PAN M3X4 | |
| 23 | SA7001001 | 1 | 切线臂管套 | BUSH TR TRIMMER ARM | |
| 24 | 062260516 | 2 | 螺钉 M2.6X5 | SCREW PAN M2.6X5 | |
| 25 | SA7002101 | 1 | 切线杆臂 B | THREAD TRIMMER LEVER ARM B | |
| 26 | S21716001 | 1 | 螺钉 M4X10 | SCREW, BUTTON HEAD M4X10 | |
| 27 | S37858000 | 1 | 针销 4X8 | NEEDLE PIN, 4X8 | |
| 28 | SA7003001 | 1 | 压板 JU | WORK CLAMP PLATE JU | |
| 29 | 060400516 | 2 | 螺钉 M4X5 | SCREW BIND M4X5 | |
| 30 | 153787001 | 2 | 螺钉 SM2.38 | SCREW, SM2.38 | |

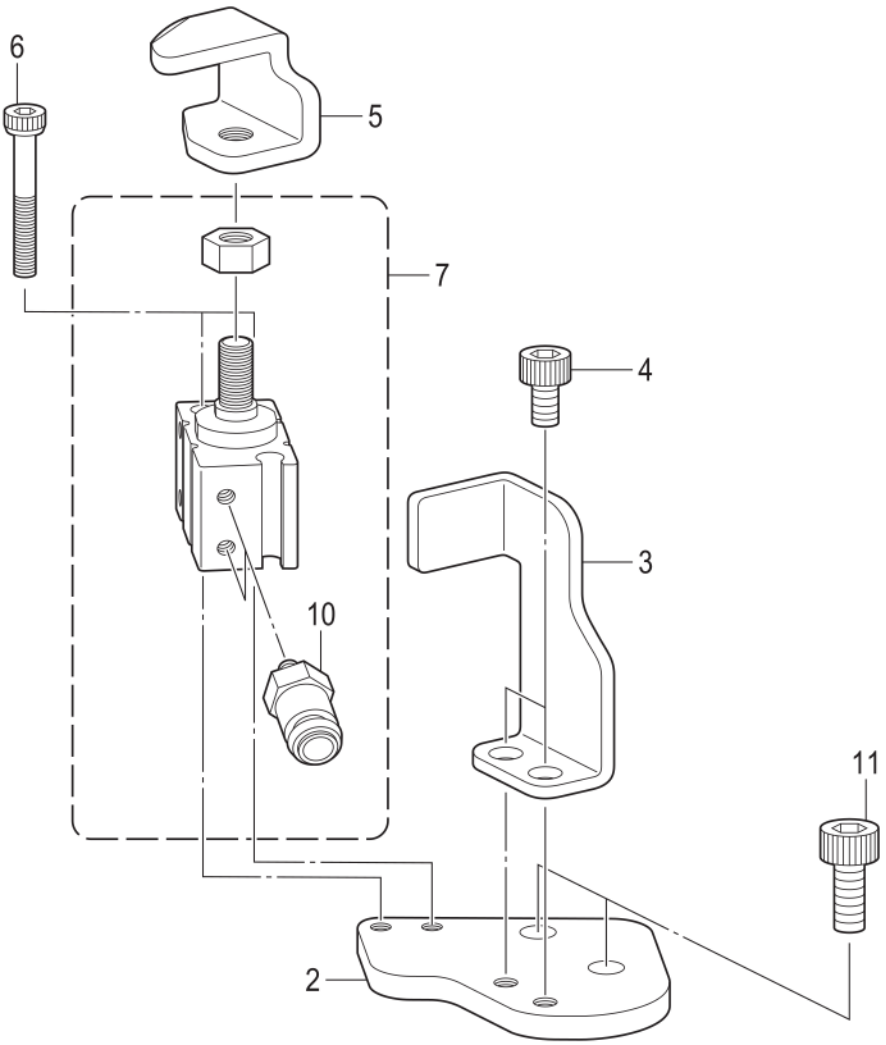


9820-409

## R. 面线剪切装置 / Upper thread trimmer mechanism

| 参照号 | 零部件序号 | 数量 | 零部件名称 | NAME OF PARTS | RM |
|---|---|---|---|---|---|
| 2 | SA7005001 | 1 | 气缸安装板 | CYLINDER SETTING PLATE | |
| 3 | SA7006001 | 1 | 气锤导向板 | HAMMER GUIDE PLATE | |
| 4 | 018400636 | 2 | 螺栓 M4X6 | BOLT SOCKET M4X6 | |
| 5 | SA7007001 | 1 | 气锤 | HAMMER | |
| 6 | S12053000 | 2 | 螺栓 M3X25 CQ2 | BOLT, CQ2 M3X25 | |
| 7 | SA7008001 | 1 | 气缸组件 | CYLINDER ASSY | |
| 10 | SA7011001 | 2 | 接头 KJH04-M3 | JOINT KJH04-M3 | |
| 11 | 018501236 | 2 | 螺栓 M5X12 | BOLT SOCKET M5X12 | |

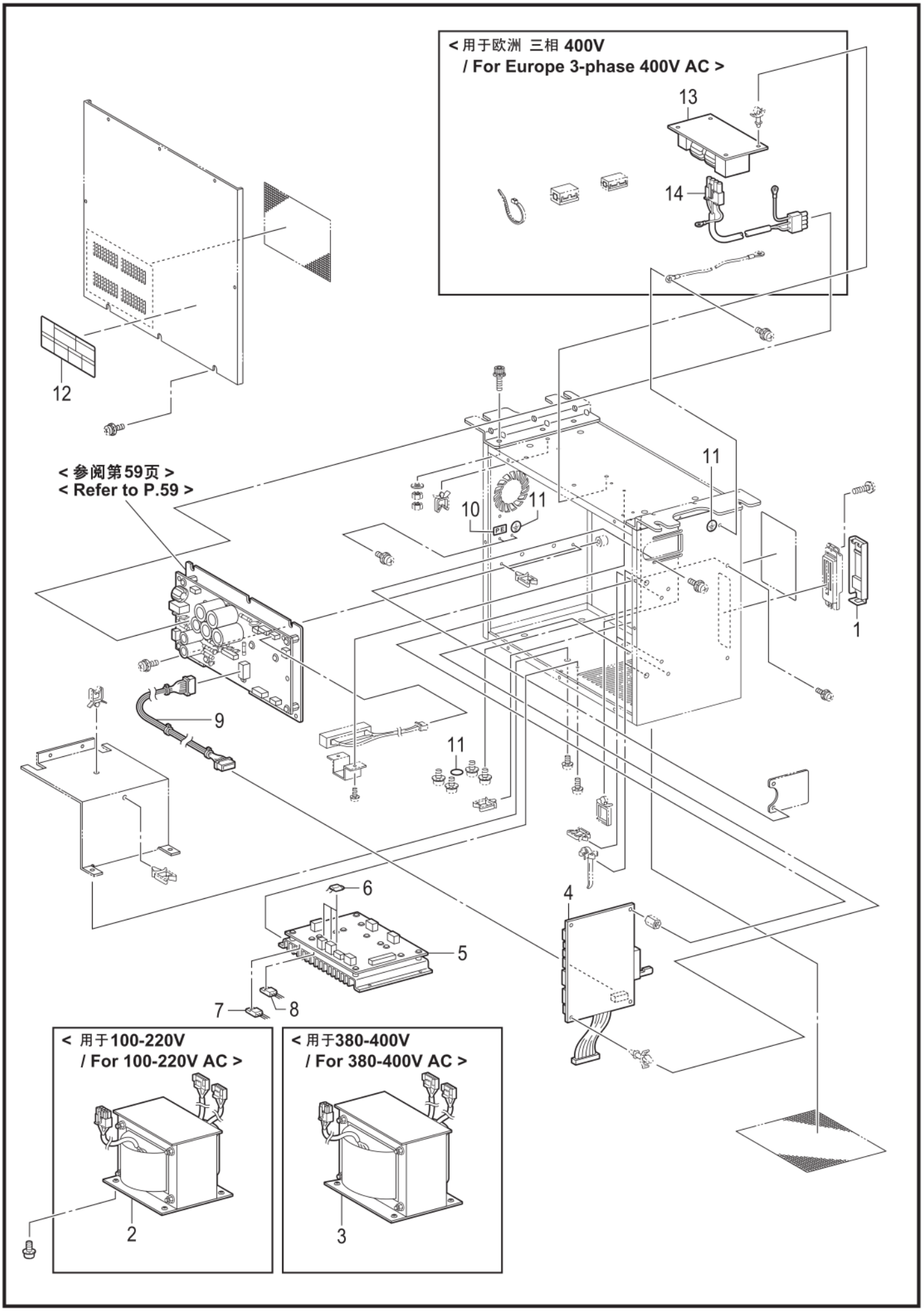
< 用于欧洲 三相 400V
/ For Europe 3-phase 400V AC >
13
14
12
< 参阅第59页 >
< Refer to P.59 >
11
10
11
PE
1
9
11
6
5
4
7
8
< 用于100-220V
/ For 100-220V AC >
2
< 用于380-400V
/ For 380-400V AC >
3

9820-502

## S1. 控制箱装置 / Control box mechanism

| 参照号 | 零部件序号 | 数量 | 零部件名称 | NAME OF PARTS | RM |
|---|---|---|---|---|---|
| 1 | SA6364001 | 1 | 盖组件 CF | CF CAP ASSY | |
| | | | ＜用于100-220V＞ | <For 100-220V AC> | |
| 2 | SA3720101 | 1 | 变压器 LV | TRANSFORMER LOW VOLTAGE | |
| | | | ＜用于380-400V＞ | <For 380-400V AC> | |
| 3 | SA3808101 | 1 | 变压器 HV | TRANSFORMER HIGH VOLTAGE | |
| 4 | SA6554001 | 1 | 主基板组件 982 | PCB ASSY MAIN 982 | |
| 5 | SA3739501 | 1 | 基板组件 PMD | PCB ASSY PMD | |
| 6 | SA3744001 | 3 | FET FS10ASJ-2 | TRANSISTOR FET:FS10ASJ-2 | |
| 7 | SA3722001 | 1 | MOSFET FX20KMJ2 | TRANSISTOR FET:FX20KMJ-2 | |
| 8 | S49484000 | 1 | MOSFETFS10KMJ-2 | TRANSISTOR FET:FS10KMJ-2 | |
| 9 | SA3806001 | 1 | 电线 | HARNESS MAIN POWER SUPPLY | |
| 10 | S37059001 | 1 | PE标记 | LABEL, PE | |
| 11 | S37060001 | 3 | 接地标记 | LABEL, GROUNDING | |
| 12 | J04115001 | 1 | 感电标签(6国) | LABEL, ELEC. SHOCK 6 LANG. | |
| | | | ＜用于欧洲 三相 400V＞ | <For Europe 3-phase 400V AC> | |
| 13 | SA3581101 | 1 | 基板组件 | PCB ASSY NF | |
| 14 | SA3796001 | 1 | 电线 NF OUT | HARNESS NF OUT | |

S2 . 控制箱装置(电源马达基板) / Control box mechanism (Power supply motor PCB)

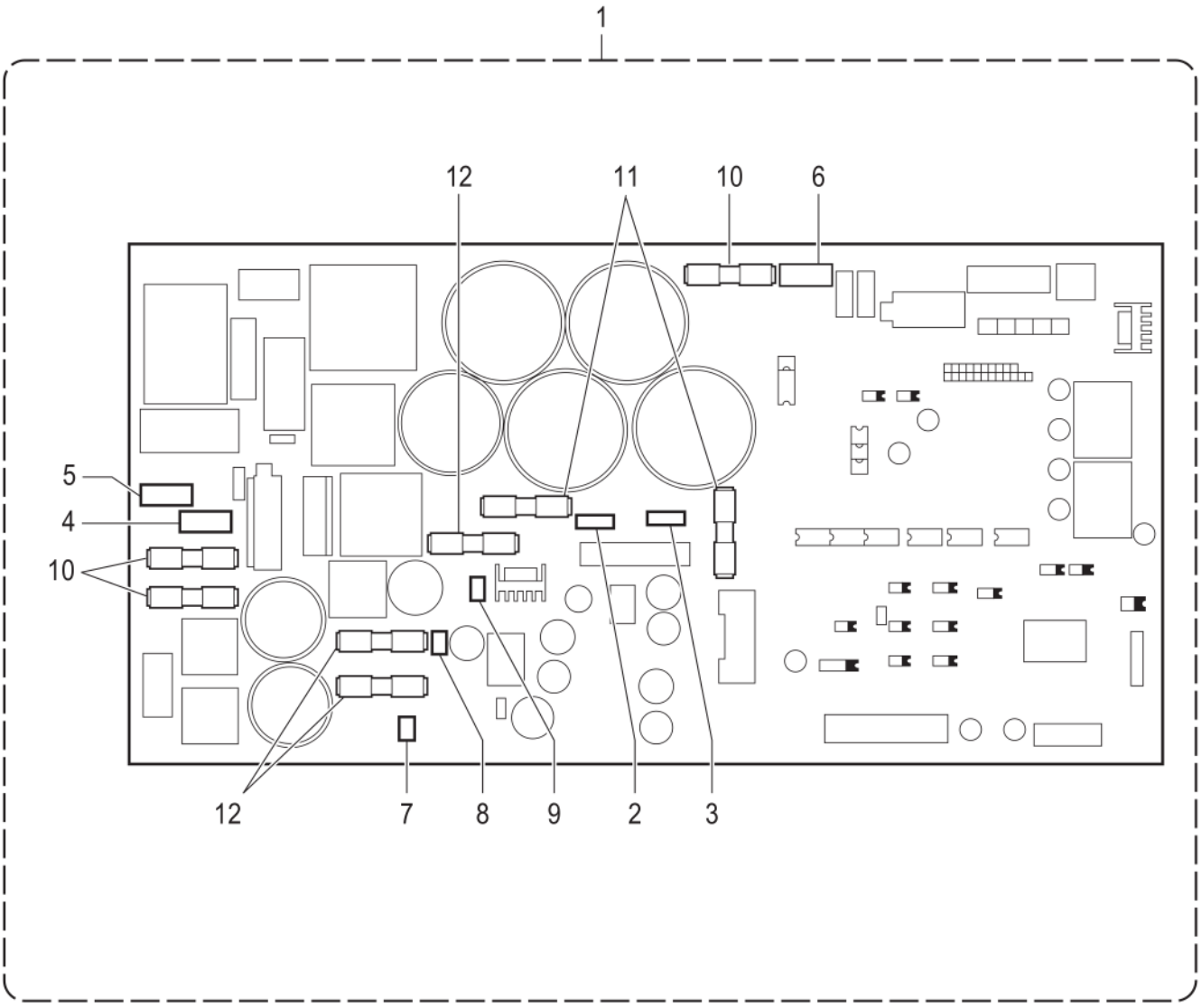


9820-502

## S2. 控制箱装置（电源马达基板）/ Control box mechanism (Power supply motor PCB)

| 参照号 | 零部件序号 | 数量 | 零部件名称 | NAME OF PARTS | RM |
|---|---|---|---|---|---|
| 1 | SA3755201 | 1 | 电源马达基板组件 | PCB ASSY POWER SUPPLY MOTOR | |
| 2 | SA3765001 | 1 | 电阻 V10D101 | VARISTOR:V10D101 | |
| 3 | SA3766001 | 1 | 电阻 V10D241 | VARISTOR:V10D241 | |
| 4 | SA3767001 | 1 | 电阻 V14D511 | VARISTOR:V14D511 | |
| 5 | SA3768001 | 1 | 电阻 V14D561 | VARISTOR:V14D561 | |
| 6 | SA3762001 | 1 | 电阻 V14D911 | VARISTOR:V14D911 | |
| 7 | SA3769001 | 1 | 电阻 V5D121 | VARISTOR:V5D121 | |
| 8 | SA3770001 | 1 | 电阻 V5D330 | VARISTOR:V5D330 | |
| 9 | SA3771001 | 1 | 电阻 V5D820 | VARISTOR:V5D820 | |
| 10 | SA3794001 | 3 | 保险丝 250V-15A | G FUSE S 15A | |
| 11 | SA3795001 | 2 | 保险丝 250V-6A | G FUSE S 6A | |
| 12 | SA7794001 | 3 | 保险丝 3A | G FUSE S 3A | |

< 用于日本 单相100V / For Japan 1-phase 100V AC. >

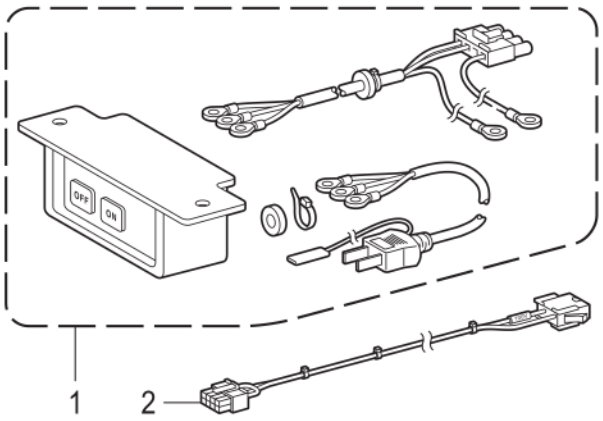


< 用于日本 三相 200V / For Japan 3-phase 200V AC.>

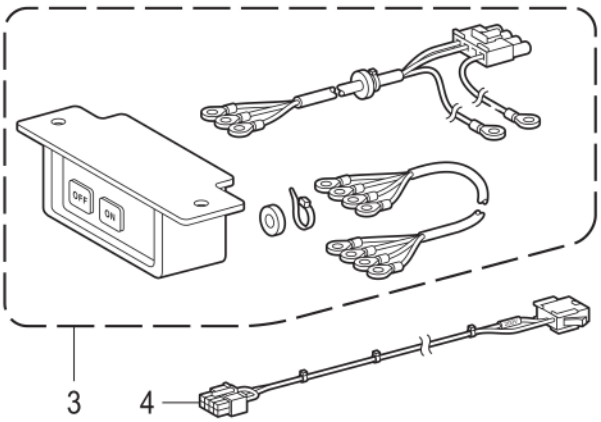


< 用于美国 三相 220V / For USA 3-phase 220V AC. >

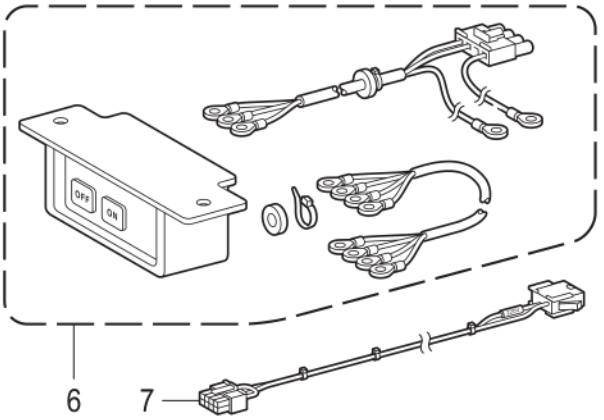


< 用于亚洲 单相 220V / For Asia 1-phase 220V AC. >

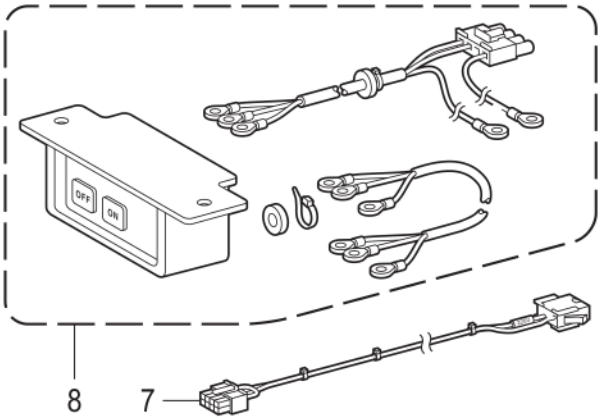


< 用于中国 三相 380V / For China 3-phase 380V AC. >

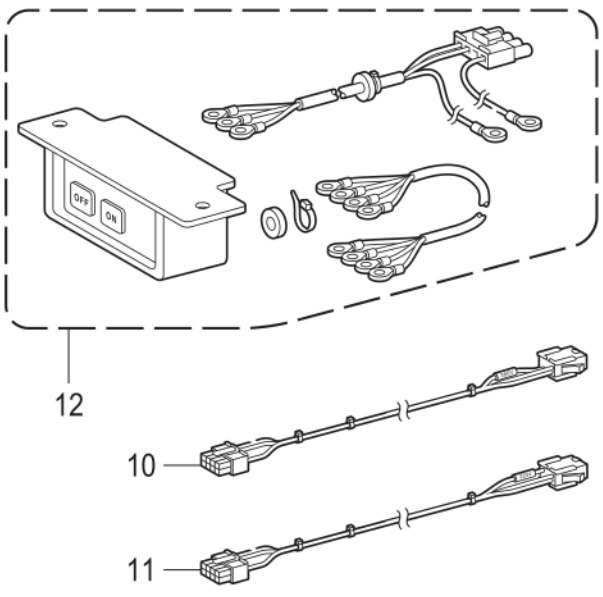


< 用于欧洲 三相 400V
/ For Europe 3-phase 400V AC. >

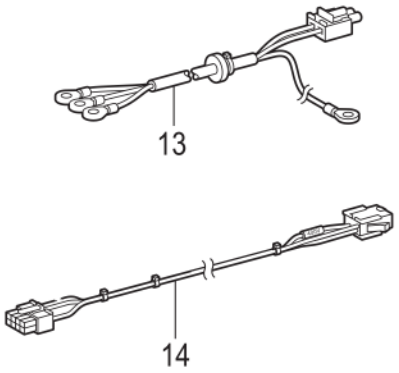


9820-502

## T. 开关装置 / Power switch mechanism

| 参照号 | 零部件序号 | 数量 | 零部件名称 | NAME OF PARTS | RM |
|---|---|---|---|---|---|
| | | | ＜用于日本　单相　100V＞ | **<For Japan 1-phase 100V AC.>** | |
| 1 | SA3813001 | 1 | 电源开关组件 1P-JP | POWER SUPPLY SWITCH ASSY,1P-JP | |
| 2 | SA3822001 | 1 | V切换电线 100V | VOLTAGE SELECT HARNESS 100V | |
| | | | ＜用于日本　三相　200V＞ | **<For Japan 3-phase 200V AC.>** | |
| 3 | SA3819001 | 1 | 电源开关组件 3P-JP | POWER SUPPLY SWITCH ASSY,3P-JP | |
| 4 | SA3825001 | 1 | V切换电线 200V | VOLTAGE SELECT HARNESS 200V | |
| | | | ＜用于美国　三相　220V＞ | **<For USA 3-phase 220V AC.>** | |
| 6 | SA3816001 | 1 | 电源开关组件 3P-L | POWER SUPPLY SWITCH ASSY,3P-L | |
| 7 | SA3812001 | 1 | V切换电线 220V | VOLTAGE SELECT HARNESS 220V | |
| | | | ＜用于亚洲　单相　220V＞ | **<For Asia 1-phase 220V AC.>** | |
| 8 | SA3809001 | 1 | 电源开关组件 1P | POWER SUPPLY SWITCH ASSY,1P | |
| 7 | SA3812001 | 1 | V切换电线 220V | VOLTAGE SELECT HARNESS 220V | |
| | | | ＜用于中国　三相　380V＞ | **<For China 3-phase 380V AC.>** | |
| 10 | SA3827001 | 1 | V切换电线 380V | VOLTAGE SELECT HARNESS 380V | |
| 11 | SA3789101 | 1 | V切换电线 H220V | VOLTAGE SELECT HARNESS H220V | |
| 12 | SA4510001 | 1 | 电源开关组件 3P-H | POWER SUPPLY SWITCH ASSY,3P-H | |
| | | | ＜用于欧洲　三相　400V＞ | **<For Europe 3-phase 400V AC.>** | |
| 13 | SA3838001 | 1 | 电线组件 AC IN EC | HARNESS ASSY, AC IN EC | |
| 14 | SA3828001 | 1 | V切换电线 400V | VOLTAGE SELECT HARNESS 400V | |

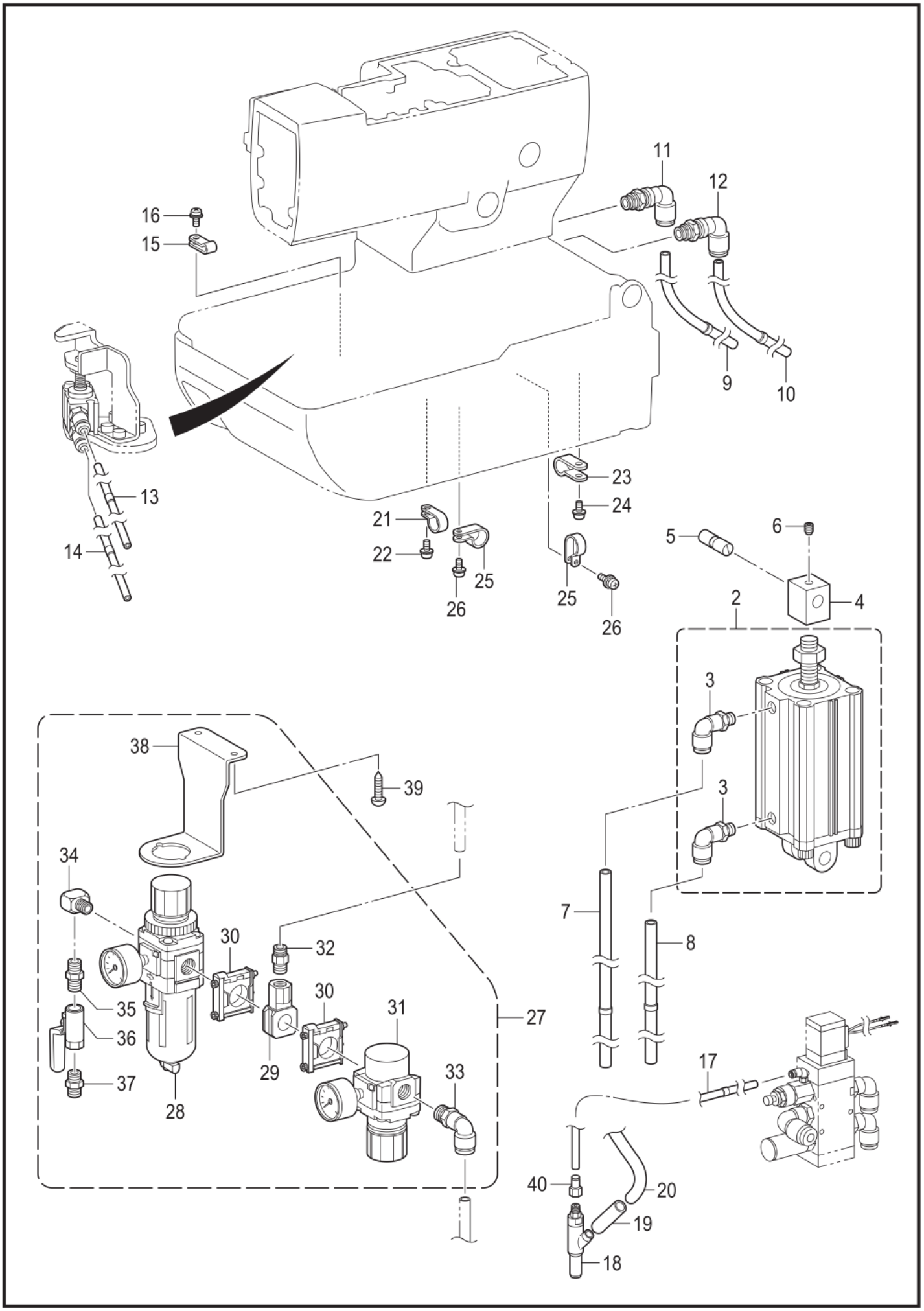
11
12
16
15
9
10
13
14
23
24
21
22
25
26
25
26
5
6
4
2
3
3
38
39
34
30
32
35
36
37
28
29
30
31
33
27
7
8
17
40
20
19
18

9820-514

## U1. 空压装置 / Air pressure mechanism

| 参照号 | 零部件序号 | 数量 | 零部件名称 | NAME OF PARTS | RM |
|---|---|---|---|---|---|
| 2 | S35360000 | 1 | 气缸组件 63X100 | CYLINDER ASSY, 63X100 | |
| 3 | S35426100 | 2 | 弯管 10-4 | ELBOW 10-4 | |
| 4 | SA7016001 | 1 | 气缸连接 | CYLINDER ROD | |
| 5 | SA7017001 | 1 | 气缸连接轴 | CYLINDER ROD SHAFT | |
| 6 | 014060836 | 1 | 固定螺钉 M6X8 | SET SCREW SOCKET (CP) M6X8 | |
| 7 | SA7018001 | 1 | 空气管 10X6.5-6A | AIR TUBE 10X6.5-6A | |
| 8 | SA7019001 | 1 | 空气管 10X6.5-5A | AIR TUBE 10X6.5-5A | |
| 9 | SA7020001 | 1 | 空气管 10X6.5-5 | AIR TUBE 10X6.5-5 | |
| 10 | SA7021001 | 1 | 空气管 10X6.5-6 | AIR TUBE 10X6.5-6 | |
| 11 | SA7022001 | 1 | 弯管 KQ2LE10-5 | UNION KQ2LE10-5 | |
| 12 | SA8040001 | 1 | 弯管 KQ2LE10-6 | UNION KQ2LE10-6 | |
| 13 | SA7023001 | 1 | 空气管 4X2.5-13 | AIR TUBE 4X2.5-13 | |
| 14 | SA7159001 | 1 | 空气管 4X2.5-14 | AIR TUBE 4X2.5-14 | |
| 15 | S00480000 | 1 | 电线夹 #5 | CORD HOLDER, 5N | |
| 16 | 0A4400806 | 1 | 螺栓(带垫圈) M4X8DA | SCREW PAN (S/P WASHER) M4X8 | |
| 17 | SA7024001 | 1 | 空气管 4X2.5-2 | AIR TUBE 4X2.5-2 | |
| 18 | S34569000 | 1 | 文吐里管 | VENTURI TUBE | |
| 19 | SA7027001 | 1 | 空气管 16X12-80 | AIR TUBE 16X12-80 | |
| 20 | SA7028001 | 1 | 布屑管 | KNIFE TRASH TUBE | |
| 21 | 525567000 | 1 | 电线夹 #8 | CORD HOLDER #8 | |
| 22 | 0A4400806 | 1 | 螺栓(带垫圈) M4X8DA | SCREW PAN (S/P WASHER) M4X8 | |
| 23 | 552908000 | 1 | 电线夹 #14 | CORD HOLDER #14 | |
| 24 | 0A4401206 | 1 | 螺栓(带垫圈) M4X12DA | SCREW PAN (S/P WASHER) M4X12 | |
| 25 | 554482000 | 2 | 电线夹 #12 | CORD HOLDER #12 | |
| 26 | 0A4401206 | 2 | 螺栓(带垫圈) M4X12DA | SCREW PAN (S/P WASHER) M4X12 | |
| 27 | SA8119001 | 1 | 压缩空气大组件 | AIR UNIT SET | |
| 28 | SA7583001 | 1 | FR复合件 AW30 | FR UNIT AW30 | |
| 29 | SA7584001 | 1 | T隔板 | T SPACER | |
| 30 | SA7585001 | 2 | 隔板 | SPACER | |
| 31 | SA7586001 | 1 | R复合件 AR30 | R UNIT AR30 | |
| 32 | S59219000 | 1 | 管接头 08-PT1/4 | HALF UNION, 08-PT1/4 | |
| 33 | SA7587001 | 1 | 弯管 KQ2L10-02S | ELBOW KQ2L10-02S | |
| 34 | SA7588001 | 1 | 接管 PT 1/4 | ELBOW PT 1/4 | |
| 35 | SA7589001 | 1 | 中间管接头 1/4 | MIDDLE NIPPLE 1/4 | |
| 36 | SA6573001 | 1 | 球阀 V03 1/4 | BALL VALVE V03 1/4 | |
| 37 | SA7595001 | 1 | 中间管接头 1/4 | MIDDLE NIPPLE 1/4 | |
| 38 | SA7580001 | 1 | 安装板 | SETTING PLATE | |
| 39 | 031553202 | 2 | 木螺钉 M5.5X32 | WOOD SCREW ROUND M5.5X32 | |
| 40 | SA8003001 | 1 | 空气接头 | AIR CONNECTOR | |

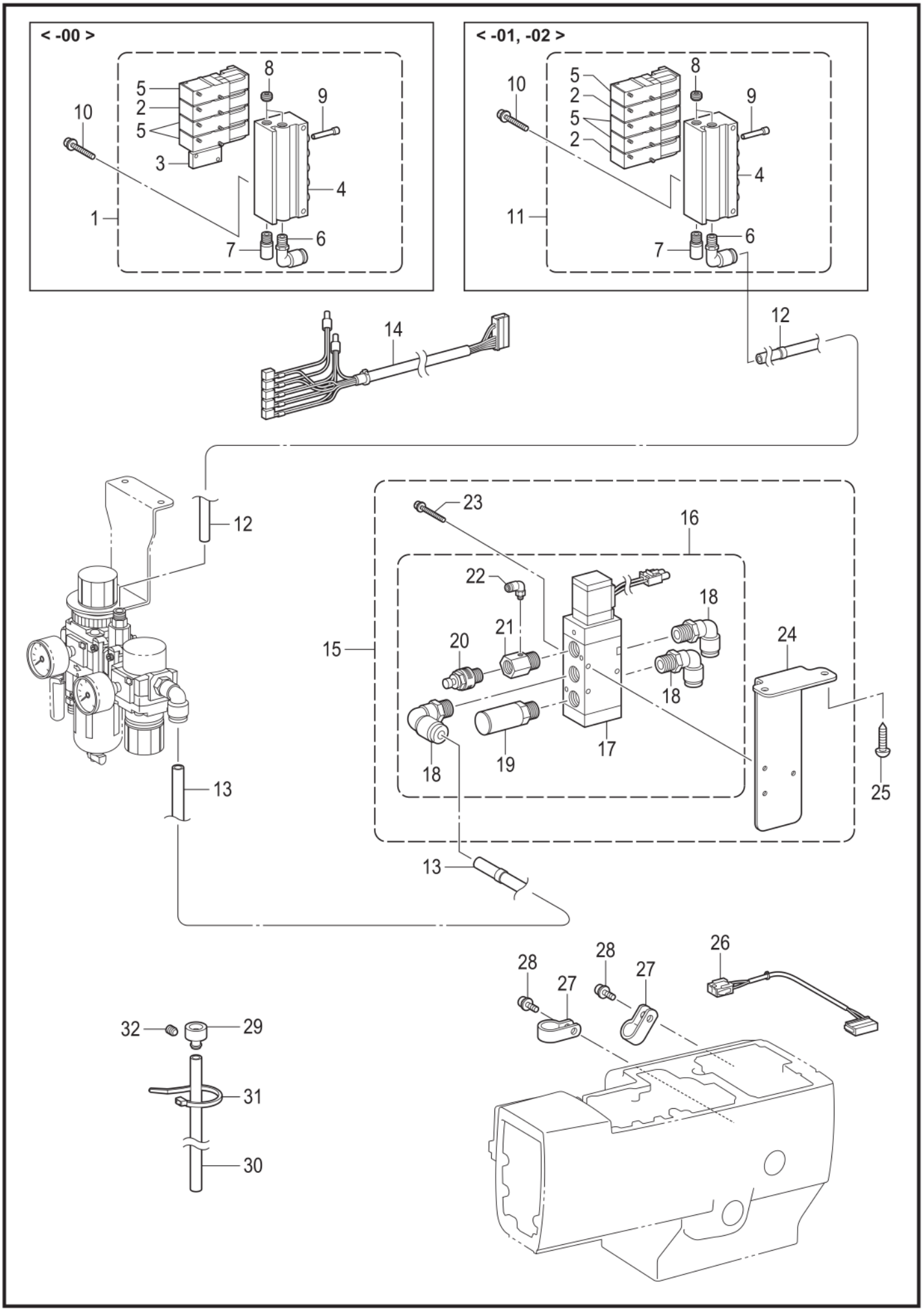
< -00 >
< -01, -02 >
1
2
3
4
5
6
7
8
9
10
11
12
13
14
15
16
17
18
19
20
21
22
23
24
25
26
27
28
29
30
31
32

9820-514

## U2. 空压装置 / Air pressure mechanism

| 参照号 | 零部件序号 | 数量 | 零部件名称 | NAME OF PARTS | RM |
|---|---|---|---|---|---|
| | | | <用于-00> | <For -00> | |
| 1 | SA7085001 | 1 | 电磁阀组件 4 | SOLENOID VALVE 4 ASSY | |
| 2 | S39116100 | 1 | 阀 VQZ2151S-5 | VALVE VQZ2151S-5 | |
| 3 | S53982000 | 1 | 遮隔板组件 | BLANKING PLATE ASSY | |
| 4 | SA7032001 | 1 | 复式接头 5 | MANIFOLD 5 | |
| 5 | S39115100 | 3 | 阀门 VQZ2151-5 | VALVE, VQZ2151-5 | |
| 6 | S14159000 | 1 | 弯管 1/8-8 | ELBOW 1/8-8 | |
| 7 | SA5283001 | 1 | 消音器 AN103-1 | SILENCER AN103-1 | |
| 8 | 153274001 | 2 | 盖 1/8 | CAP, 1/8 | |
| 9 | SA7033001 | 1 | 插销 4 | PLUG 4 | |
| 10 | 0A4403506 | 2 | 螺栓(带垫圈) M4X35DA | SCREW PAN (S/P WASHER) M4X35 | |
| | | | <用于-01和-02> | <For -01 & -02> | |
| 11 | SA7031001 | 1 | 电磁阀组件 5 | SOLENOID VALVE 5 ASSY | |
| 2 | S39116100 | 2 | 阀 VQZ2151S-5 | VALVE VQZ2151S-5 | |
| 4 | SA7032001 | 1 | 复式接头 5 | MANIFOLD 5 | |
| 5 | S39115100 | 3 | 阀门 VQZ2151-5 | VALVE, VQZ2151-5 | |
| 6 | S14159000 | 1 | 弯管 1/8-8 | ELBOW 1/8-8 | |
| 7 | SA5283001 | 1 | 消音器 AN103-1 | SILENCER AN103-1 | |
| 8 | 153274001 | 2 | 盖 1/8 | CAP, 1/8 | |
| 9 | SA7033001 | 1 | 插销 4 | PLUG 4 | |
| 10 | 0A4403506 | 2 | 螺栓(带垫圈) M4X35DA | SCREW PAN (S/P WASHER) M4X35 | |
| 12 | SA7034001 | 1 | 空气管 8X5-1 | AIR TUBE 8X5-1 | |
| 13 | SA7035001 | 1 | 空气管 10X6.5-4 | AIR TUBE 10X6.5-4 | |
| 14 | SA6525001 | 1 | 阀接线组 X5 | VALVE HARNESS ASSY X5 | |
| 15 | SA8120101 | 1 | 切刀阀大组件 | CUTTER VALVE SET | |
| 16 | SA7591101 | 1 | 阀组件 | VALVE ASSY | |
| 17 | SA7592101 | 1 | 阀门 VF5120-5G-03 | VALVE VF5120-5G-03 | |
| 18 | SA7593001 | 3 | 弯管 | ELBOW KQ2L10-03S | |
| 19 | SA7594001 | 1 | 消音器 AN303-03 | SILENCER AN303-03 | |
| 20 | SA7598001 | 1 | 消音器 ASN2-02 | SILENCER ASN2-02 | |
| 21 | SA7596001 | 1 | 接头 3/8X1/4-M5 | JOINT 3/8X1/4-M5 | |
| 22 | SA7597001 | 1 | 弯管 | ELBOW KJL04-M5 | |
| 23 | 0A4404006 | 3 | 螺栓(带垫圈) M4X40DA | SCREW PAN (S/P WASHER) M4X40 | |
| 24 | SA7581001 | 1 | 阀安装板 | VALVE SETTING PLATE | |
| 25 | 031553202 | 2 | 木螺钉 M5.5X32 | WOOD SCREW ROUND M5.5X32 | |
| 26 | SA6526101 | 1 | 气锤阀接线 | HAMMER VALVE HARNESS | |
| 27 | S00470000 | 2 | 电线夹 #16 | CORD HOLDER, 16N | |
| 28 | 0A5401006 | 2 | 螺栓(带垫圈) M4X10DB | SCREW PAN (S/P WASHER) M4X10 | |
| 29 | SA7046001 | 1 | 管接头 | HOSE JOINT | |
| 30 | SA7047001 | 1 | 油管 | OIL TUBE | |
| 31 | 228475000 | 1 | 电线夹 1.9X80 | FASTENING BAND 1.9X80 | |
| 32 | 012500536 | 1 | 螺钉 M5X5 | SET SCREW SOCKET (FT) M5X5 | |

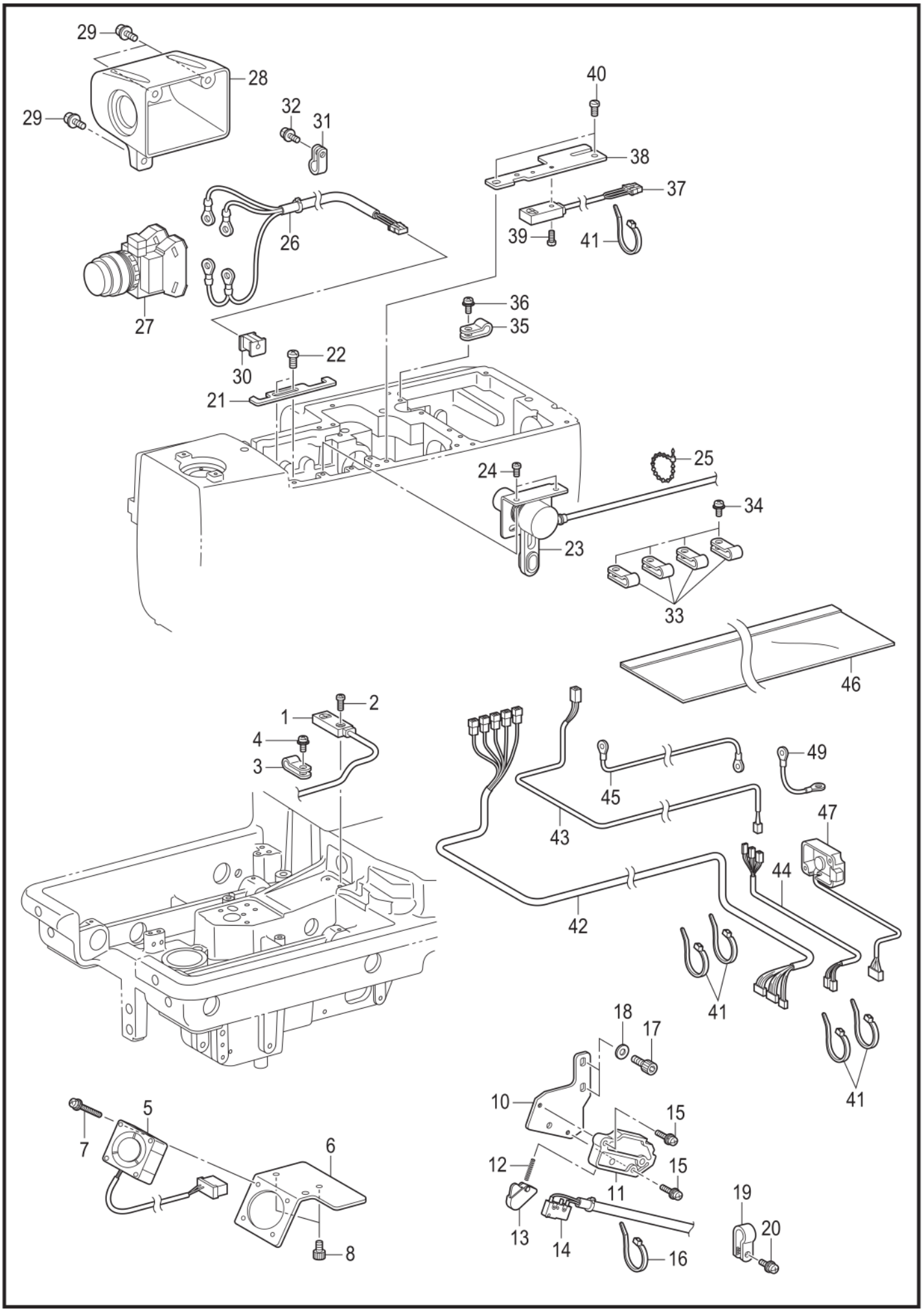
29
28
29
32
31
40
38
37
39
41
26
27
36
35
30
22
21
24
25
34
23
33
46
1
2
4
3
49
45
43
47
44
42
41
18
17
10
15
12
15
11
19
20
13
14
16
41
5
7
6
8

9820-515

## V. 电气部品装置 / Power supply equipment mechanism

| 参照号 | 零部件序号 | 数量 | 零部件名称 | NAME OF PARTS | RM |
|---|---|---|---|---|---|
| 1 | SA6530001 | 1 | Y原点感应器 | Y-POSITION SENSOR | |
| 2 | 062300816 | 1 | 螺钉 M3X8 | SCREW PAN M3X8 | |
| 3 | S10243000 | 1 | 尼龙夹 NK-3N | CORD HOLDER, NK-3N | |
| 4 | 0A4400806 | 1 | 螺栓(带垫圈) M4X8DA | SCREW PAN (S/P WASHER) M4X8 | |
| 5 | SA6618001 | 1 | DC风扇马达组件 40 | DC FAN MOTOR ASSY 40 | |
| 6 | SA5696001 | 1 | 风扇支架 | FAN HOLDER | |
| 7 | 0A5302005 | 4 | 螺栓(带垫圈) M3X20DB | SCREW PAN (S/P WASHER) M3X20 | |
| 8 | 018400836 | 2 | 螺栓 M4X8 | BOLT SOCKET M4X8 | |
| 10 | SA5729001 | 1 | 安全开关板 | SAFETY SWITCH PLATE | |
| 11 | SA5730001 | 1 | 安全开关基座 | SAFETY SWITCH BASE | |
| 12 | SA5731001 | 1 | 开关弹簧 | SAFETY SWITCH SPRING | |
| 13 | SA5732001 | 1 | 开关手柄 | SAFETY SWITCH LEVER | |
| 14 | SA6533001 | 1 | 头部开关组件 | SWITCH ASSY MACHINE HEAD | |
| 15 | SA7293001 | 2 | 螺栓(带垫圈) M3X12 | SCREW, PAN (S/P W) M3X12 | |
| 16 | S04159000 | 1 | 线夹 1M | BAND, 1M | |
| 17 | 018400836 | 2 | 螺栓 M4X8 | BOLT SOCKET M4X8 | |
| 18 | 025040236 | 2 | 平垫圈 M4 | WASHER PLAIN M 4 | |
| 19 | 525664000 | 1 | 电线夹 #6 | CORD HOLDER #6 | |
| 20 | 0A4400806 | 1 | 螺栓(带垫圈) M4X8DA | SCREW PAN (S/P WASHER) M4X8 | |
| 21 | SA5733001 | 1 | 电线压板 | CORD HOLDER | |
| 22 | 062400816 | 2 | 螺钉 M4X8 | SCREW PAN M4X8 | |
| 23 | SA5734101 | 1 | 切刀感应器组件 | CUTTER SENSOR ASSY | |
| 24 | 062400816 | 2 | 螺钉 M4X8 | SCREW PAN M4X8 | |
| 25 | 340400001 | 1 | 线夹 | BEAD BAND | |
| 26 | SA6531101 | 1 | 停止开关接线 | STOP SWITCH HARNESS | |
| 27 | SA7488001 | 1 | 开关 HW1B-M211B | SWITCH HW1B-M211B | |
| 28 | SA5737001 | 1 | 开关罩 | SWITCH COVER | |
| 29 | 0A4400806 | 3 | 螺栓(带垫圈) M4X8DA | SCREW PAN (S/P WASHER) M4X8 | |
| 30 | SA5738001 | 1 | 电线套 | CORD BUSH | |
| 31 | 625010000 | 1 | 尼龙夹 NK-2N | NYLON CLAMP NK-2N | |
| 32 | 0A4400806 | 1 | 螺栓(带垫圈) M4X8DA | SCREW PAN (S/P WASHER) M4X8 | |
| 33 | 149547000 | 4 | 压线板 | CORD HOLDER, 4N | |
| 34 | 0A4400806 | 4 | 螺栓(带垫圈) M4X8DA | SCREW PAN (S/P WASHER) M4X8 | |
| 35 | S10243000 | 1 | 尼龙夹 NK-3N | CORD HOLDER, NK-3N | |
| 36 | 0A4400806 | 1 | 螺栓(带垫圈) M4X8DA | SCREW PAN (S/P WASHER) M4X8 | |
| 37 | SA5740001 | 1 | 针摆感应器组件 | ZIGZAG SENSOR ASSY | |
| 38 | SA5741001 | 1 | 感应器安装板 | SENSOR SETTING PLATE | |
| 39 | 062300816 | 1 | 螺钉 M3X8 | SCREW PAN M3X8 | |
| 40 | 062400816 | 2 | 螺钉 M4X8 | SCREW PAN M4X8 | |
| 41 | 228475000 | 5 | 电线夹 1.9X80 | FASTENING BAND 1.9X80 | |
| 42 | SA6532001 | 1 | 电线组件 | CONNECT HARNESS ASSY | |
| 43 | SA6535001 | 1 | 面线电磁铁电线 | UP SOLENOID HARNESS | |
| 44 | SA6536001 | 1 | 电磁铁电线 | SOLENOID HARNESS | |
| 45 | SA5434001 | 1 | 接地线 700 | GROUND WIRE 700 | |
| 46 | SA6636001 | 1 | 粘链管 40X800 | QUICK TUBE ASSY 40X800 | |
| 47 | SA7119001 | 1 | 头部检出复合件 | HEAD DETECTION UNIT ASSY | |
| 49 | SA5433001 | 1 | 接地线 40 | GROUND WIRE 40 | |

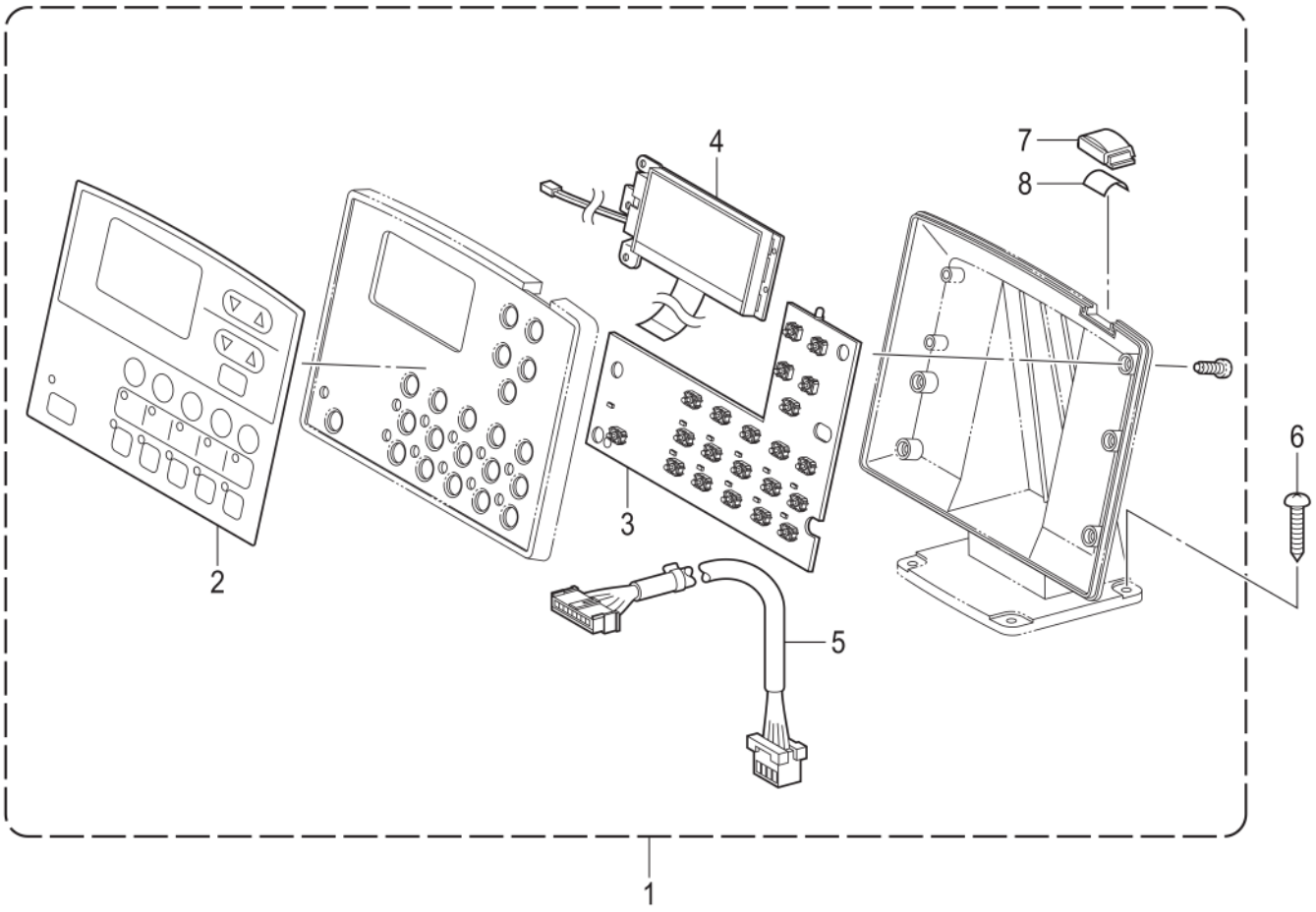


9820-530

## W. 操作盘装置 / Operation panel mechanism

| 参照号 | 零部件序号 | 数量 | 零部件名称 | NAME OF PARTS | RM |
|---|---|---|---|---|---|
| 1 | SA6547001 | 1 | 操作盘组件 | OPERATION PANEL ASSY | |
| 2 | SA6550001 | 1 | 操作盘面板 | PANEL SHEET | |
| 3 | SA5148001 | 1 | 操作盘基板组件 | PCB ASSY PANEL | |
| 4 | SA5360001 | 1 | 灯光板组件 | LIGHT PLATE ASSY | |
| 5 | SA6546001 | 1 | 操作盘接线 | PANEL HARNESS | |
| 6 | 0B0452006 | 4 | 圆头木螺钉 M4.5X20 | WOOD SCREW ROUND M4.5X20 | |
| 7 | J03974001 | 1 | 护灯罩 | LAMP HOLDER | |
| 8 | J04146001 | 1 | 薄膜 75PBA | DIFFUSION SHEET 75PBA | |

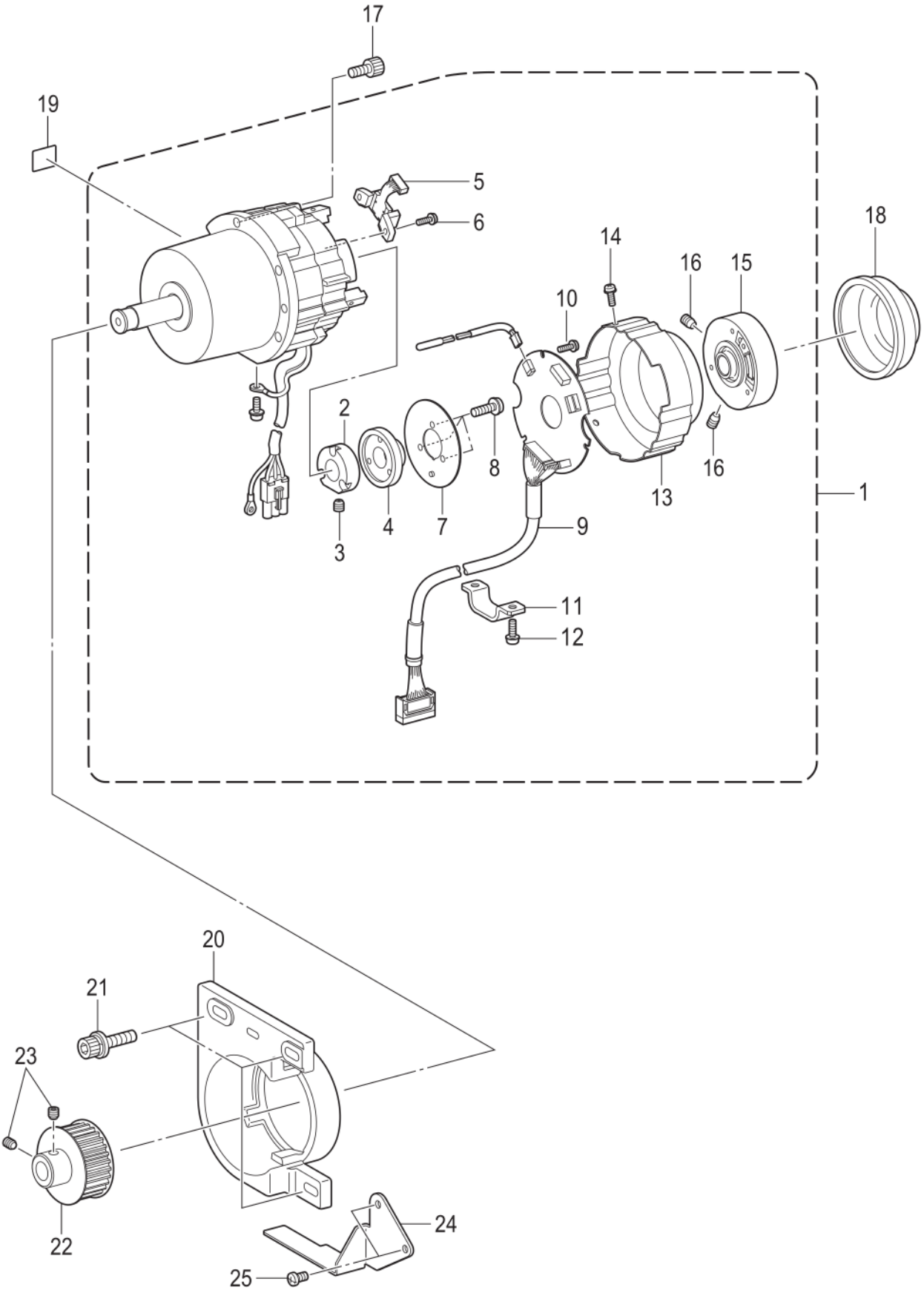


9820-650

## X. 马达装置 / Motor mechanism

| 参照号 | 零部件序号 | 数量 | 零部件名称 | NAME OF PARTS | RM |
|---|---|---|---|---|---|
| 1 | SA7476001 | 1 | 马达组件 CDD | MOTOR ASSY CDD HATOME | |
| 2 | J03955001 | 1 | 磁鼓 CDD | DRUM CDD | |
| 3 | 014400632 | 2 | 螺钉 M4X6 | SET SCREW SOCKET (CP) M4X6 | |
| 4 | J03956001 | 1 | 磁铁 180P36 | MAGNET 180P36 | |
| 5 | J03957001 | 1 | MR感应器组件 180P | MR SENSOR ASSY 180P | |
| 6 | 0A4300806 | 2 | 螺栓(带垫圈) M3X8DA | SCREW PAN (S/P WASHER) M3X8 | |
| 7 | J03958001 | 1 | 屏蔽板 CDD | SHIELD PLATE CDD | |
| 8 | 0A4261006 | 3 | 螺栓(带垫圈) M2．6X10DA | SCREW PAN (S/P WASHER) M2.6X10 | |
| 9 | SA7480001 | 1 | 基板组件 ENC | ENC PCB ASSY HATOME | |
| 10 | 0A5300606 | 3 | 螺栓(带垫圈) M3X6DB | SCREW PAN (S/P WASHER) M3X6 | |
| 11 | J04230001 | 1 | 电线固定夹 CDD-HT | CORD HOLDER CDD-HT | |
| 12 | 0A4401006 | 3 | 螺栓(带垫圈) M4X10DA | SCREW PAN (S/P WASHER) M4X10 | |
| 13 | J04388001 | 1 | 编码器盖 430D | ENCORDER COVER 430D | |
| 14 | 0A4300806 | 3 | 螺栓(带垫圈) M3X8DA | SCREW PAN (S/P WASHER) M3X8 | |
| 15 | J04303001 | 1 | 同步轮组件 430D | PULLEY HOLDER ASSY 430D | |
| 16 | 014500632 | 2 | 螺钉 M5X6 | SET SCREW SOCKET (CP) M5X6 | |
| 17 | 018501636 | 5 | 螺栓 M5X16 | BOLT SOCKET M5X16 | |
| 18 | SA7012001 | 1 | 马达罩 | MOTOR COVER | |
| 19 | J03663001 | 1 | 高温标签 13X20 | LABEL, HIGH TEMP. 13X20 | |
| 20 | SA7013001 | 1 | 马达支架 | MOTOR HOLDRER | |
| 21 | S58636001 | 3 | 螺拴(带垫圈) M8X30 | BOLT SOCKET (S/P WASHER)M8X30 | |
| 22 | SA5549001 | 1 | 同步手轮组件 | TIMING PULLEY ASSY | |
| 23 | S23651001 | 2 | 固定螺钉 M6X6 | SET SCREW SOCKET (FT) M6X6 | |
| 24 | SA7014001 | 1 | 皮带导向 | BELT GUIDE | |
| 25 | 062400816 | 2 | 螺钉 M4X8 | SCREW PAN M4X8 | |

Y . 踏板开关关系 / Foot switch pedal mechanism

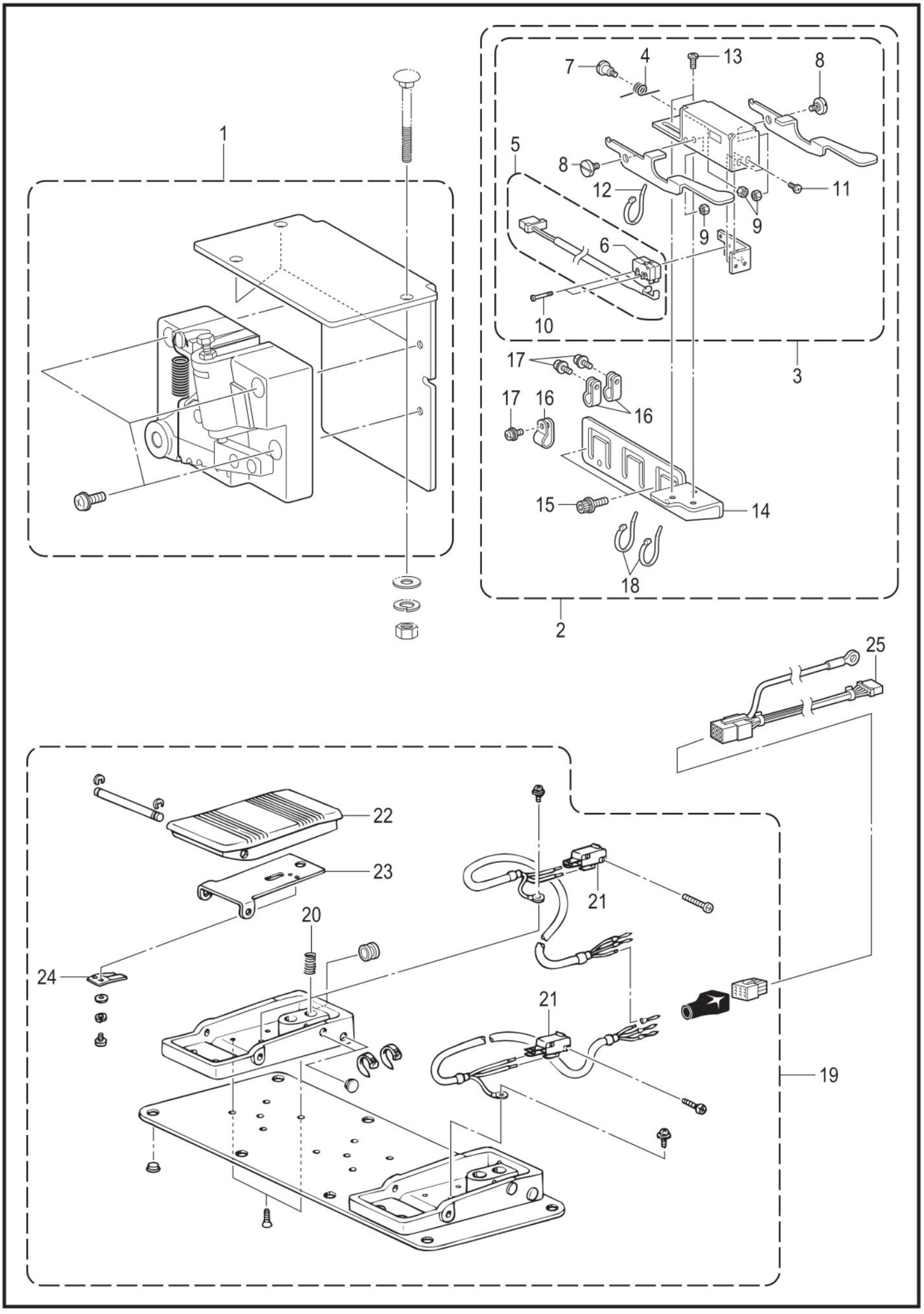


9820-651

## Y. 踏板开关关系 / Foot switch pedal mechanism

| 参照号 | 零部件序号 | 数量 | 零部件名称 | NAME OF PARTS | RM |
|---|---|---|---|---|---|
| | | | **<用于脚踏板>** | **<For treadle>** | |
| 1 | SA6567101 | 1 | 踏板复合件 B | TREADLE UNIT B ASSY | |
| | | | **<用于手动开关>** | **<For hand start switch>** | |
| 2 | SA7121001 | 1 | 手动开关大组件 | HAND START SWITCH UNIT | |
| 3 | SA7122001 | 1 | 手动开关组件 | HAND START SWITCH ASSY | |
| 4 | S39914001 | 1 | 开关弹簧 | SWITCH LEVER SPRING | |
| 5 | SA7123001 | 1 | 手动开关 | HAND START SWITCH | |
| 6 | S02699001 | 2 | 微调开关 | MICRO SWITCH | |
| 7 | S34922101 | 1 | 段螺钉 M4 | SHOULDER SCREW M4 | |
| 8 | S34966001 | 2 | 段螺钉 M4 | SHOULDER SCREW M4 | |
| 9 | 021400202 | 3 | 六角螺母 M4 | NUT 2 M4 | |
| 10 | 146124001 | 2 | 螺钉 SM2.38 | SCREW, SM2.38 | |
| 11 | 060300616 | 2 | 螺钉 M3X6 | SCREW BIND M3X6 | |
| 12 | S04557000 | 1 | 电线夹 PLT1M | BAND, PLT1M | |
| 13 | 060400816 | 2 | 螺钉 M4X8 | SCREW BIND M4X8 | |
| 14 | SA7124001 | 1 | 手动开关安装板 | HAND SWITCH SETTING PLATE | |
| 15 | S55485001 | 2 | 螺拴(带垫圈) M5X12 | BOLT SOCKET (S/P WASHER)M5X12 | |
| 16 | S10243000 | 3 | 尼龙夹 NK-3N | CORD HOLDER, NK-3N | |
| 17 | 0A4400806 | 3 | 螺栓(带垫圈) M4X8DA | SCREW PAN (S/P WASHER) M4X8 | |
| 18 | 228475000 | 2 | 电线夹 1.9X80 | FASTENING BAND 1.9X80 | |
| | | | **<用于2连脚踏板>** | **<For 2-pedal foot switch>** | |
| 19 | S42838301 | 1 | 2连踏板开关 2SW | 2-PEDAL FOOT SWITCH 2 | |
| 20 | S38170001 | 2 | 弹簧 | FOOT PEDAL SPRING | |
| 21 | S36260000 | 2 | 开关 VX | PIN BUTTON MICRO SWITCH, VX | |
| 22 | S38174000 | 2 | 脚踏板 | FOOT PEDAL | |
| 23 | S38175101 | 2 | 脚踏护板 | PROTECTION PLATE PEDAL | |
| 24 | S38176101 | 2 | 弹簧板 | SPRING, PLATE | |
| 25 | SA3784001 | 1 | 脚开关变换配线 | CONVERSION HARNESS FOOT SW | |

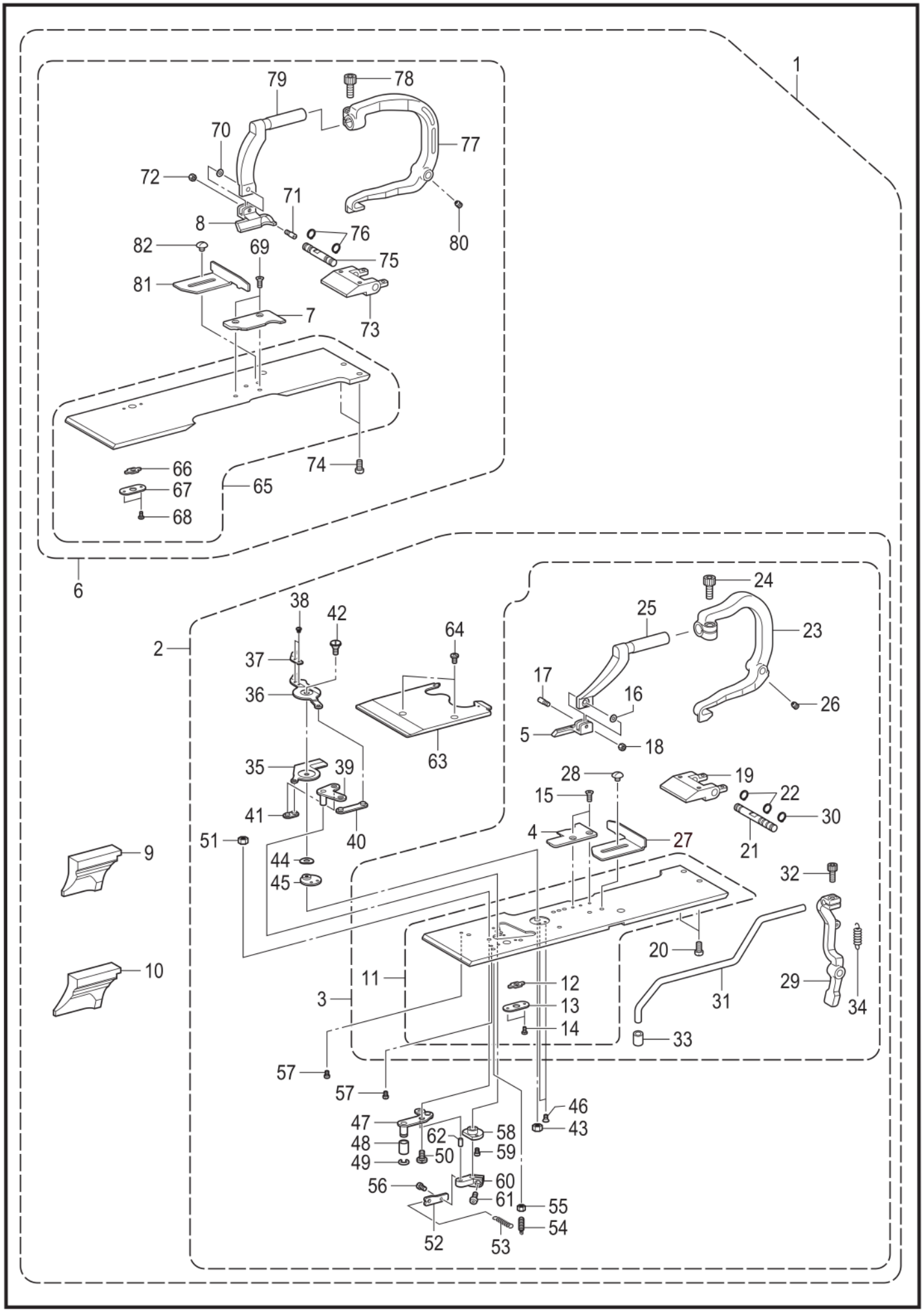
1
79
78
70
77
72
71
8
76
80
82
69
75
81
7
73
74
66
67
65
68
6
2
38
42
64
37
36
63
35
39
41
40
51
44
45
9
10
24
25
23
17
16
26
5
18
28
19
22
15
30
4
27
21
32
20
11
12
29
3
13
31
34
14
33
57
57
46
47
43
62
58
48
50
59
49
60
56
61
55
54
52
53

9820-940

## AA1. 附属装置 / Attachment set

| 参照号 | 零部件序号 | 数量 | 零部件名称 | NAME OF PARTS | RM |
|---|---|---|---|---|---|
| | | | **<规格变换用零部件>** | **<For exchange parts>** | |
| | | | **<用于-02: L1422>** | **<For -02: L1422>** | |
| 1 | SA7750001 | 1 | 规格变换零部件组 (L1422) | EXCHANGE PARTS SET L1422 | |
| 2 | SA7748001 | 1 | L1422-板R组件 | L1422-PLATE R ASSY | |
| 3 | SA7728001 | 1 | 压脚板组件 R1422 | WORK CLAMP PLATE R1422 ASSY | |
| 4 | SA7102001 | 1 | 针板 L1422R | NEEDLE PLATE L1422R | |
| 5 | SA7092001 | 1 | 布压板 R-JL1422 | WORK CLAMP R-JL1422 | |
| 6 | SA7749001 | 1 | 压脚板组件 L1422 | WORK CLAMP PLATE L1422 ASSY | |
| 7 | SA7097001 | 1 | 针板 L1422L | NEEDLE PLATE L1422L | |
| 8 | SA7087001 | 1 | 布压板 L-JL1422 | WORK CLAMP L-JL1422 | |
| 9 | S37704001 | 1 | 气锤 S16 | HAMMER, S16 | |
| 10 | S37706001 | 1 | 气锤 S20 | HAMMER, S20 | |
| | | | **<用于-02: L2230>** | **<For -02: L2230>** | |
| 1 | SA7752001 | 1 | 规格变换零部件组 (L2230) | EXCHANGE PARTS SET L2230 | |
| 2 | SA7751001 | 1 | L2230-板R组件 | L2230-PLATE R ASSY | |
| 3 | SA6728001 | 1 | 压脚板组件 R2230 | WORK CLAMP PLATE R2230 UNIT | |
| 4 | SA6731001 | 1 | 针板 L2230R | NEEDLE PLATE L 2230R | |
| 5 | SA6732001 | 1 | 压布 R-JL2230 | WORK CLAMP R-JL2230 | |
| 6 | SA6738001 | 1 | 压脚板组件 L2230 | WORK CLAMP PLATE L2230 UNIT | |
| 7 | SA6741001 | 1 | 针板 L2230L | NEEDLE PLATE L 2230L | |
| 8 | SA6742001 | 1 | 压布板 L-JL2230 | WORK CLAMP L-JL2230 | |
| 9 | S37708001 | 1 | 气锤 S24 | HAMMER, S24 | |
| 10 | S42053001 | 1 | 气锤 S28 | HAMMER, S28 | |
| | | | **<用于-02: L2634>** | **<For -02: L2634>** | |
| 1 | SA7756001 | 1 | 规格变换零部件组 (L2634) | EXCHANGE PARTS SET L2634 | |
| 2 | SA7754001 | 1 | L2634-板R组件 | L2634-PLATE R ASSY | |
| 3 | SA7753001 | 1 | 压脚板组件 R2634 | WORK CLAMP PLATE R2634 ASSY | |
| 4 | SA7103001 | 1 | 针板 L2634R | NEEDLE PLATE L2634R | |
| 5 | SA7093001 | 1 | 布压板 R-JL2634 | WORK CLAMP R-JL2634 | |
| 6 | SA7755001 | 1 | 压脚板组件 L2634 | WORK CLAMP PLATE L2634 ASSY | |
| 7 | SA7098001 | 1 | 针板 L2634L | NEEDLE PLATE L2634L | |
| 8 | SA7088001 | 1 | 布压板 L-JL2634 | WORK CLAMP L-JL2634 | |
| 9 | S37198001 | 1 | 气锤 28 | HAMMER, 28 | |
| 10 | S37200001 | 1 | 气锤 32 | HAMMER, 32 | |
| | | | **<用于-02: L3442>** | **<For -02: L3442>** | |
| 1 | SA7764001 | 1 | 规格变换零部件组 (L3442) | EXCHANGE PARTS SET L3442 | |
| 2 | SA7758001 | 1 | L3442-板R组件 | L3442-PLATE R ASSY | |
| 3 | SA7757001 | 1 | 压脚板组件 R3442 | WORK CLAMP PLATE R3442 ASSY | |
| 4 | SA7104001 | 1 | 针板 L3442R | NEEDLE PLATE L3442R | |
| 5 | SA7094001 | 1 | 布压板 R-JL3442 | WORK CLAMP R-JL3442 | |
| 6 | SA7762001 | 1 | 压脚板组件 L3442 | WORK CLAMP PLATE L3442 ASSY | |
| 7 | SA7099001 | 1 | 针板 L3442L | NEEDLE PLATE L3442L | |
| 8 | SA7089001 | 1 | 布压板 L-JL3442 | WORK CLAMP L-JL3442 | |
| 9 | S37202001 | 1 | 气锤 36 | HAMMER, 36 | |
| 10 | SA7106001 | 1 | 气锤 42 | HAMMER 42 | |
| | | | **<用于-02: L1826>** | **<For -02: L1826>** | |
| 1 | SA7771001 | 1 | 规格变换零部件组 (L1826) | EXCHANGE PARTS SET L1826 | |
| 2 | SA7768001 | 1 | L1826-板R组件 | L1826-PLATE R ASSY | |
| 3 | SA7187001 | 1 | 压脚板组件 R1826 | WORK CLAMP PLATE R1826 ASSY | |
| 4 | SA7105001 | 1 | 针板 L1826R | NEEDLE PLATE L1826R | |
| 5 | SA7095001 | 1 | 布压板 R-JL1826 | WORK CLAMP R-JL1826 | |
| 6 | SA7186001 | 1 | 压脚板组件 L1826 | WORK CLAMP PLATE L1826 ASSY | |
| 7 | SA7100001 | 1 | 针板 L1826L | NEEDLE PLATE L1826L | |
| 8 | SA7090001 | 1 | 布压板 L-JL1826 | WORK CLAMP L-JL1826 | |
| 9 | S37706001 | 1 | 气锤 S20 | HAMMER, S20 | |
| 10 | S37708001 | 1 | 气锤 S24 | HAMMER, S24 | |

AA1 . 附属装置 / Attachment set

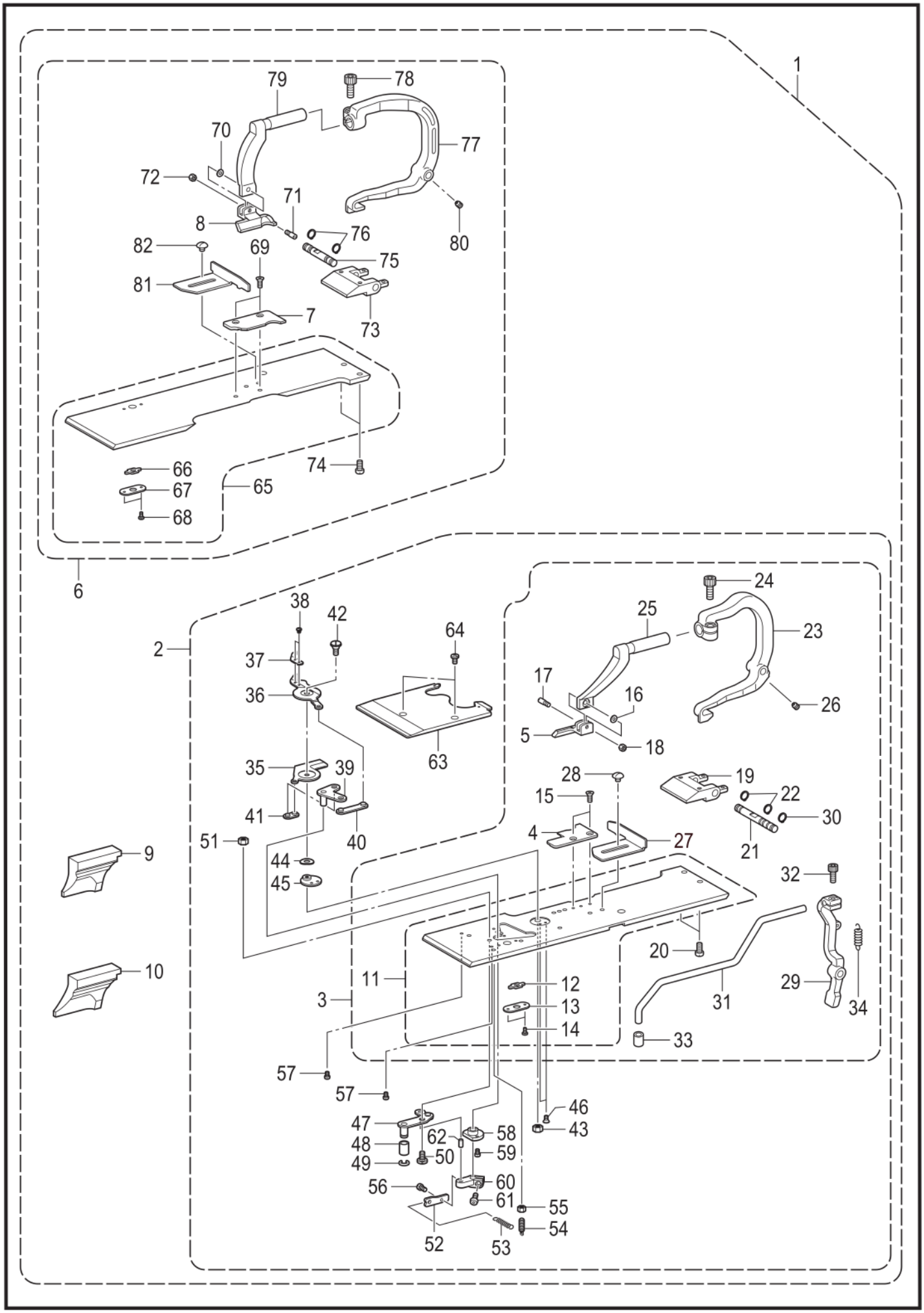


9820-940

## AA1. 附属装置 / Attachment set

| 参照号 | 零部件序号 | 数量 | 零部件名称 | NAME OF PARTS | RM |
|---|---|---|---|---|---|
| 11 | SA6729001 | 1 | 布压板组件 JR | WORK CLAMP PLATE JR UNIT | |
| 12 | S35315001 | 1 | 角块 | OPENING SLIDE BLOCK | |
| 13 | S35316001 | 1 | 角块支撑板 | SLIDE BLOCK SUPPORT PLATE | |
| 14 | 060020416 | 2 | 螺钉 M2X4 | SCREW BIND M2X4 | |
| 15 | S06696004 | 2 | 螺钉 M3X6 | SCREW, FLAT M3X6 | |
| 16 | S35236000 | 1 | 垫圈 3.2 | WASHER, BENDING 3.2 | |
| 17 | S35235001 | 1 | 支架销 | SUPPORT PIN, CLAMP | |
| 18 | 021300306 | 1 | 螺母 M3 | NUT 3 M3 | |
| 19 | SA5560001 | 1 | 夹轴承受板 | CLAMP SHAFT HOLDER | |
| 20 | 062400816 | 2 | 螺钉 M4X8 | SCREW PAN M4X8 | |
| 21 | SA6733001 | 1 | 支点轴 J | CLAMP FULCRUM SHAFT J | |
| 22 | 048060142 | 2 | 轴用挡圈 C6 | RETAINING RING EXTERNAL C6 | |
| 23 | SA5585001 | 1 | 夹杆 R | CLAMP LEVER R | |
| 24 | 018501236 | 1 | 螺栓 M5X12 | BOLT SOCKET M5X12 | |
| 25 | SA6734001 | 1 | 夹臂 R-J | CLAMP ARM R-J | |
| 26 | 014400536 | 2 | 螺钉 M4X5 | SET SCREW SOCKET(CP) M4X5 | |
| 27 | SA7550001 | 1 | 布挡板 R | CROTH GUIDE R | |
| 28 | S35326101 | 1 | 螺钉 M3.5 | SCREW M3.5 | |
| 29 | SA6735001 | 1 | 辅助压脚臂 | AUX CLAMP ARM | |
| 30 | 048060142 | 1 | 轴用挡圈 C6 | RETAINING RING EXTERNAL C6 | |
| 31 | SA6736001 | 1 | 辅助压脚杆 | SUB AUX CLAMP WRIST | |
| 32 | 018401036 | 1 | 螺栓 M4X10 | BOLT SOCKET M4X10 | |
| 33 | S05356000 | 1 | 扣夹 A | BUTTON CLAMP, A | |
| 34 | SA6737001 | 1 | 回复弹簧 | AUX CLAMP TSWIST SPRING | |
| 35 | SA6988001 | 1 | 动刀 R | MOVABLE KNIFE R | |
| 36 | SA6989001 | 1 | 动刀 L | MOVABLE KNIFE L | |
| 37 | SA6990001 | 1 | 挡线器 | THREAD HANDLER | |
| 38 | 153787001 | 2 | 螺钉 SM2.38 | SCREW, SM2.38 | |
| 39 | SA6991001 | 1 | 动刀驱动板 | MOVABLE KNIFE DRIVING PLATE | |
| 40 | SA6992001 | 1 | 切线连接组件 A | THREAD TRIMMER LINK A ASSY | |
| 41 | SA6994001 | 1 | 切线连接组件 B | THREAD TRIMMER LINK B ASSY | |
| 42 | S37660101 | 1 | 段螺钉 M4 | SHOULDER SCREW, M4 | |
| 43 | 021400206 | 1 | 六角螺母 M4 | NUT 2 M4 | |
| 44 | S37654000 | 1 | 波纹垫圈 | WAVE WASHER | |
| 45 | S37655101 | 1 | 切刀支撑圈 | KNIFE SUPPORT WASHER | |
| 46 | 141542001 | 2 | 螺钉 3.18 | SCREW 3.18 | |
| 47 | SA6996001 | 1 | 切线连接杆组件 J | THREAD TRIMMER L-LEVER J ASSY | |
| 48 | SA7778001 | 1 | 连接杆滚轮 | LINK LEVER ROLLER | |
| 49 | 137191051 | 1 | 挡圈 | STOP RING | |
| 50 | SA5693001 | 1 | 段螺钉 M4 | SHOULDER SCREW M4 | |
| 51 | 021400306 | 1 | 六角螺母 M4 | NUT 3 M4 | |
| 52 | SA6998001 | 1 | 弹簧挂钩 | SPRING HOOK | |
| 53 | SA6999001 | 1 | 切线弹簧 | THREAD TRIMMER SPRING | |
| 54 | S34902001 | 1 | 弹簧挂钩 | SPRING HOOK | |
| 55 | 021350106 | 1 | 螺母 M3.5 | NUT 1 M3.5 | |
| 56 | 062260406 | 1 | 螺钉 M2.6X4 | SCREW PAN M2.6X4 | |
| 57 | 062300416 | 2 | 螺钉 M3X4 | SCREW PAN M3X4 | |
| 58 | SA7001001 | 1 | 切线臂管套 | BUSH TR TRIMMER ARM | |
| 59 | 062260516 | 2 | 螺钉 M2.6X5 | SCREW PAN M2.6X5 | |
| 60 | SA7002001 | 1 | 切线杆臂 B | THREAD TRIMMER LEVER ARM B | |
| 61 | S21716001 | 1 | 螺钉 M4X10 | SCREW, BUTTON HEAD M4X10 | |
| 62 | S37858000 | 1 | 针销 4X8 | NEEDLE PIN, 4X8 | |
| 63 | SA7003001 | 1 | 压板 JU | WORK CLAMP PLATE JU | |
| 64 | 060400516 | 2 | 螺钉 M4X5 | SCREW BIND M4X5 | |
| 65 | SA6739001 | 1 | 布压板组件 JL | WORK CLAMP PLATE JL ASSY | |
| 66 | S35315001 | 1 | 角块 | OPENING SLIDE BLOCK | |
| 67 | S35316001 | 1 | 角块支撑板 | SLIDE BLOCK SUPPORT PLATE | |
| 68 | 060020416 | 2 | 螺钉 M2X4 | SCREW BIND M2X4 | |
| 69 | S06696004 | 2 | 螺钉 M3X6 | SCREW, FLAT M3X6 | |
| 70 | S35236000 | 1 | 垫圈 3.2 | WASHER, BENDING 3.2 | |
| 71 | S35235001 | 1 | 支架销 | SUPPORT PIN, CLAMP | |
| 72 | 021300306 | 1 | 螺母 M3 | NUT 3 M3 | |
| 73 | SA5560001 | 1 | 夹轴承受板 | CLAMP SHAFT HOLDER | |

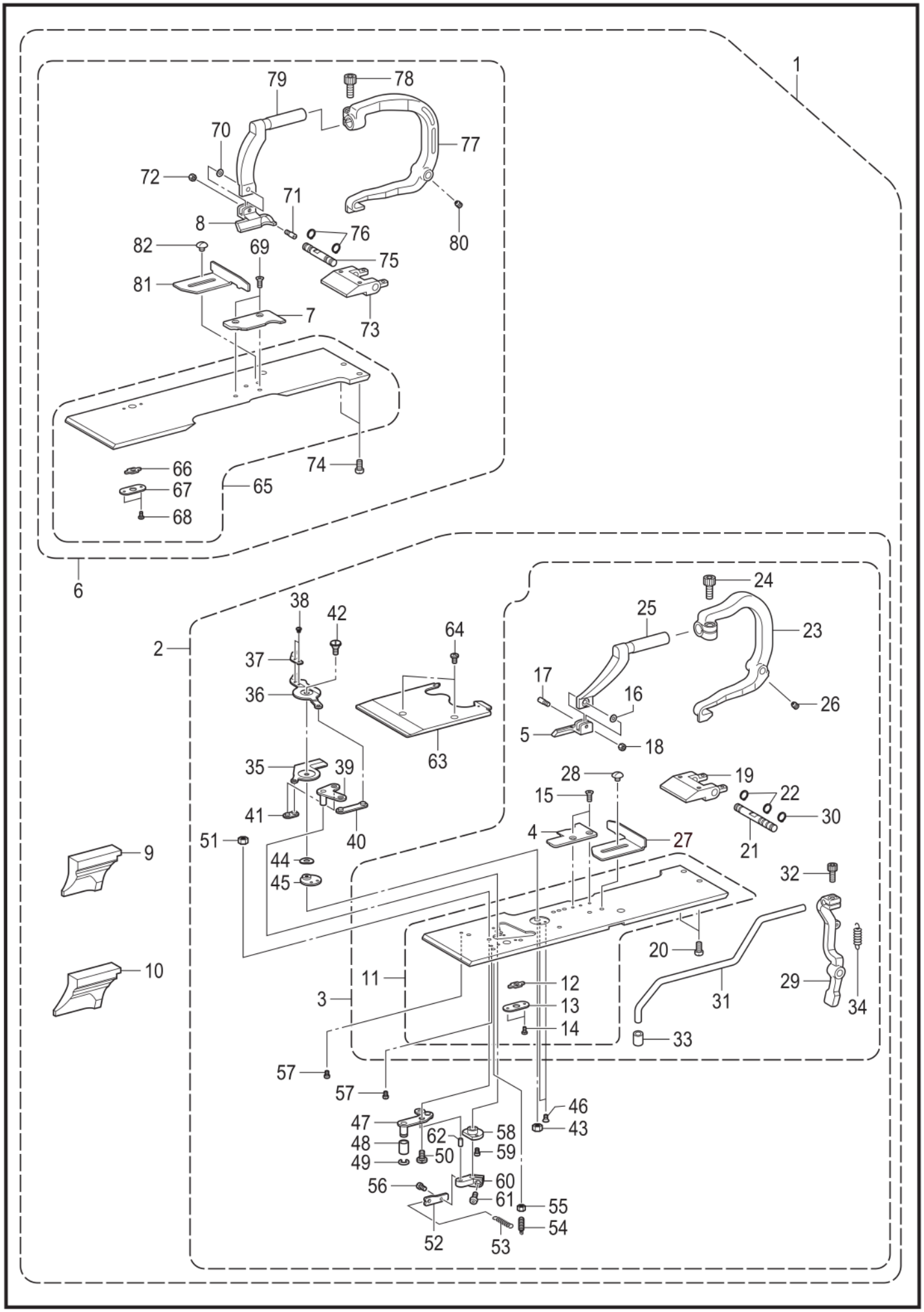
1
79
78
70
77
72
71
8
76
80
82
69
75
81
7
73
66
74
67
65
68
6
2
38
42
64
37
36
63
35
39
41
40
51
44
45
9
10
24
25
23
17
16
26
5
18
28
19
15
22
30
4
27
21
32
20
11
12
29
3
13
31
34
14
33
57
57
46
47
43
62
58
48
50
59
49
60
56
61
55
54
52
53

9820-940

## AA1. 附属装置 / Attachment set

| 参照号 | 零部件序号 | 数量 | 零部件名称 | NAME OF PARTS | RM |
|---|---|---|---|---|---|
| 74 | 062400816 | 2 | 螺钉 M4X8 | SCREW PAN M4X8 | |
| 75 | SA5674001 | 1 | 支点轴 | CLAMP FULCRUM SHAFT | |
| 76 | 048060142 | 2 | 轴用挡圈 C6 | RETAINING RING EXTERNAL C6 | |
| 77 | SA5671001 | 1 | 夹杆 L | CLAMP LEVER L | |
| 78 | 018501236 | 1 | 螺栓 M5X12 | BOLT SOCKET M5X12 | |
| 79 | SA6743001 | 1 | 夹臂 L-J | CLAMP ARM L-J | |
| 80 | 014400536 | 2 | 螺钉 M4X5 | SET SCREW SOCKET(CP) M4X5 | |
| 81 | SA7551001 | 1 | 布挡板 L | CROTH GUIDE L | |
| 82 | S35326101 | 1 | 螺钉 M3.5 | SCREW M3.5 | |

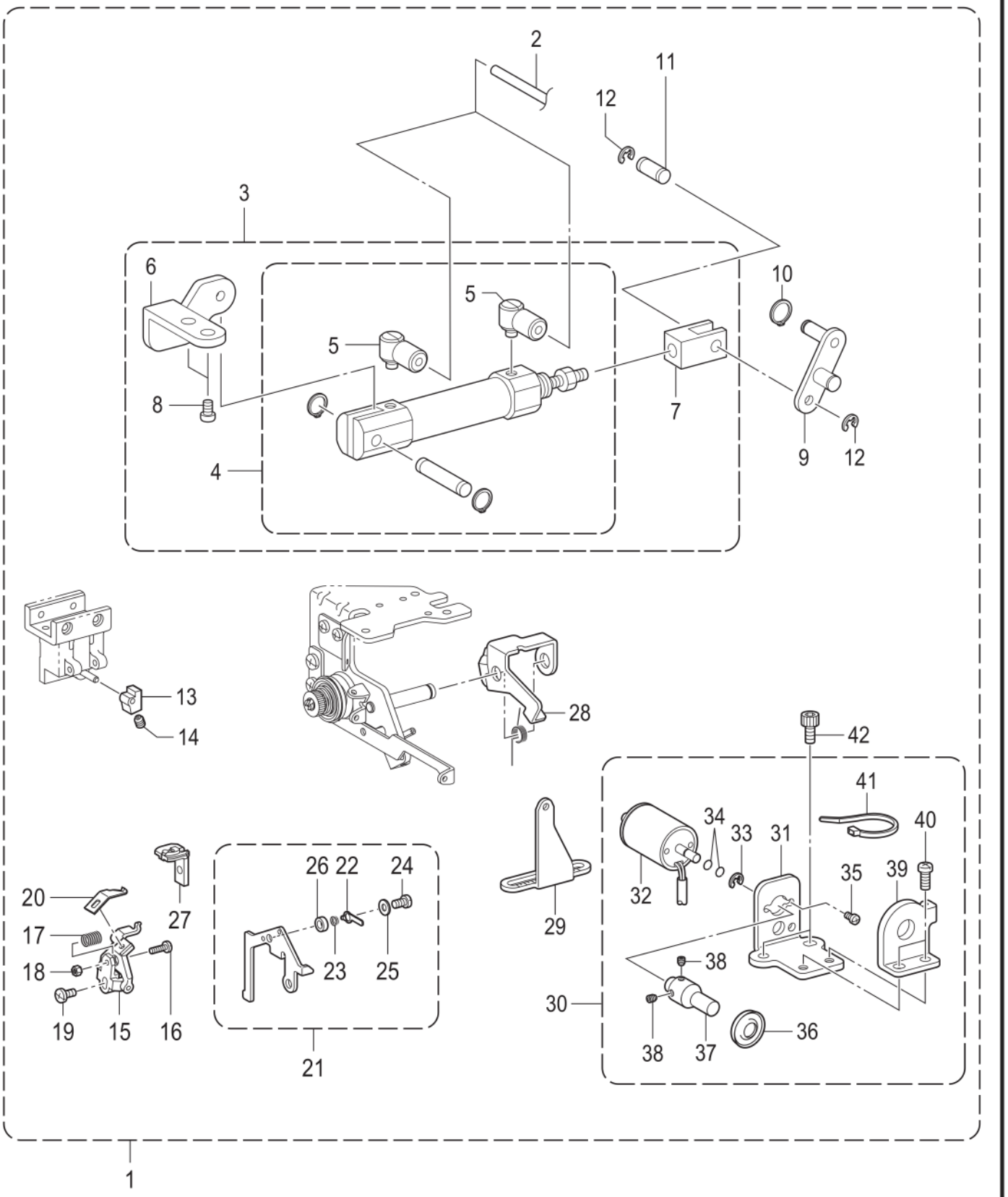
2
11
12
3
6
5
5
10
8
7
9
12
4
13
14
28
42
41
34
33
31
40
32
35
39
38
30
38
37
36
29
27
26
22
24
20
17
18
19
15
16
23
25
21
1

9820-940

## AA2. 附属装置 / Attachment set

| 参照号 | 零部件序号 | 数量 | 零部件名称 | NAME OF PARTS | RM |
|---|---|---|---|---|---|
| | | | <规格变换用零部件> | <For exchange parts> | |
| | | | <用于-01变更为-02规格时> | <Exchange parts from -01 to -02> | |
| 1 | SA7773001 | 1 | 规格变换零部件组(-2) | EXCHANGE PARTS SET -2 | |
| 2 | SA7131001 | 2 | 空气管 4X2.5-150 | AIR TUBE 4X2.5-150 | |
| 3 | SA6718001 | 1 | 辅助压脚气缸组件 | AUX CLAMP C-SUPPORT ASSY | |
| 4 | SA6719001 | 1 | 气缸组件 10X15 | CYLINDER ASSY 10X15 | |
| 5 | S12150000 | 2 | 管接头 M-5HL-4 | TUBE ELBOW, M-5HL-4 | |
| 6 | SA6720001 | 1 | 辅助压脚 S 支架 | AUX CLAMP S HOLDER | |
| 7 | S35351001 | 1 | 气缸杆 | CYLINDER ROD | |
| 8 | 062400816 | 2 | 螺钉 M4X8 | SCREW PAN M4X8 | |
| 9 | SA6721001 | 1 | 气缸杆销 | AUX CLAMP CONNECTING ROD ASSY | |
| 10 | 048050142 | 1 | 轴用挡圈 C5 | RETAINING RING EXTERNAL C5 | |
| 11 | SA6726001 | 1 | 气缸连杆销 | CYLINDER ROD PIN | |
| 12 | 048030342 | 2 | 挡圈 E3 | RETAINING RING E3 | |
| 13 | SA6800001 | 1 | 气锤垫块 | HAMMER SPACER | |
| 14 | 014400536 | 1 | 螺钉 M4X5 | SET SCREW SOCKET(CP) M4X5 | |
| 15 | SA6868001 | 1 | 底线压板组件 J | LOWER THREAD PRESSER J ASSY | |
| 16 | S37724001 | 1 | 螺钉 SM2.38 | SCREW, SM2.38 | |
| 17 | S37725001 | 1 | 底线压簧 | COMPRESSIONSPRING | |
| 18 | S47932001 | 1 | 螺母 SM2.38-56 | NUT, SM2.38-56 | |
| 19 | 060300816 | 1 | 螺钉 M3X8 | SCREW BIND M3X8 | |
| 20 | S37723101 | 1 | 上动刀 B | UPPER MOVABLE KNIFE, B | |
| 21 | SA6873001 | 1 | 芯线导向组件 C-J | GIMP THREAD GUIDE C-J ASSY | |
| 22 | SA7613001 | 1 | 芯线压板 | GIMP THREAD CLAMP PLATE | |
| 23 | SA7614001 | 1 | 芯线调节弹簧 | GIMP THREAD TENSION SPRING | |
| 24 | 062300506 | 1 | 螺钉 M3X5 | SCREW PAN M3X5 | |
| 25 | 025030236 | 1 | 平垫圈 M3 | WASHER PLAIN M 3 | |
| 26 | SA7615001 | 1 | 管套 3 | COLLAR 3 | |
| 27 | S37752001 | 1 | 针孔板 1.8-J | THROAT PLATE, 1.8-J | |
| 28 | SA7067101 | 1 | 底线松线板 | L-THREAD RELEASE PLATE | |
| 29 | SA6982001 | 1 | 芯线导向 J | GIMP THREAD GUIDE J | |
| 30 | SA6983001 | 1 | 芯线夹组件 | GIMP THREAD CLAMP ASSY | |
| 31 | SA6984001 | 1 | 芯线夹板 | GIMP THREAD CLAMP PLATE | |
| 32 | SA6537001 | 1 | 芯线电磁铁 | GIMP THREAD SOLENOID | |
| 33 | 048025346 | 1 | 挡圈 E2.5 | RETAINING RING E2.5 | |
| 34 | 081003870 | 2 | O形圈 S3 | O RING S3 | |
| 35 | 062260406 | 2 | 螺钉 M2.6X4 | SCREW PAN M2.6X4 | |
| 36 | 145446001 | 1 | 夹线盘 | DISC, TENSION | |
| 37 | SA6986001 | 1 | 芯线轴 | GIMP THREAD SHAFT | |
| 38 | 014300332 | 2 | 螺钉 M3X3 | SET SCREW SOCKET (CP) M3X3 | |
| 39 | SA6987001 | 1 | 芯线夹 | GIMP THREAD CLAMP | |
| 40 | 062400816 | 2 | 螺钉 M4X8 | SCREW PAN M4X8 | |
| 41 | S04557000 | 1 | 电线夹 PLT1M | BAND PLT1M | |
| 42 | 018400836 | 2 | 螺栓 M4X8 | BOLT SOCKET M4X8 | |

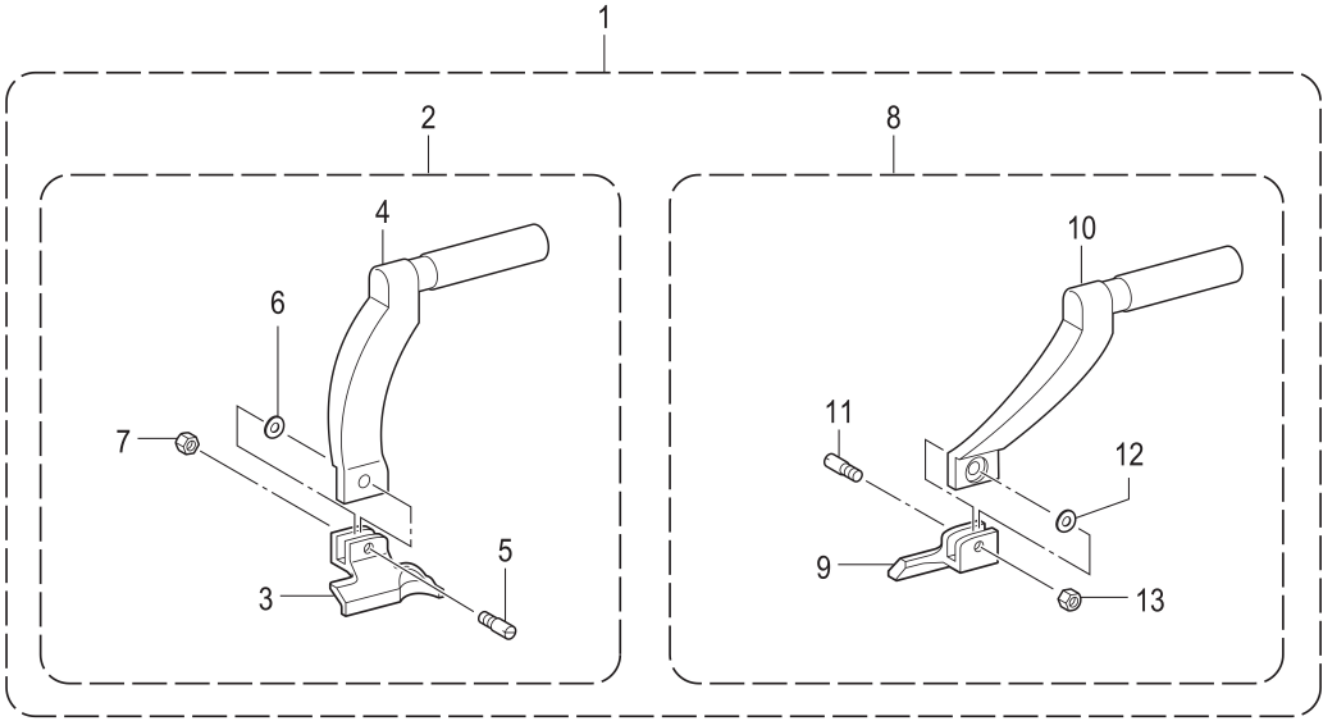


9820-940

## AA3. 附属装置 / Attachment set

| 参照号 | 零部件序号 | 数量 | 零部件名称 | NAME OF PARTS | RM |
|---|---|---|---|---|---|
| | | | <用于腰带压脚 L26> | <For waist belt presser L26> | |
| 1 | SA7777001 | 1 | 压脚复合件 L26W | WORK CLAMP SET L26W | |
| 2 | SA7775001 | 1 | 压脚组件 L-L26W | WORK CLAMP ASSY L-L26W | |
| 3 | S43408001 | 1 | 压脚 L-L3W | WORK CLAMP, L-L3W | |
| 4 | SA7726001 | 1 | 夹臂 L-JW | CLAMP ARM L-JW | |
| 5 | S35235001 | 1 | 支架销 | SUPPORT PIN, CLAMP | |
| 6 | S35236000 | 1 | 垫圈 3.2 | WASHER, BENDING 3.2 | |
| 7 | 021300306 | 1 | 螺母 M3 | NUT 3 M3 | |
| 8 | SA7776001 | 1 | 压脚组件 R-L26W | WORK CLAMP ASSY R-L26W | |
| 9 | S43409001 | 1 | 压脚 R-L3W | WORK CLAMP, R-L3W | |
| 10 | SA7727001 | 1 | 夹臂 R-JW | CLAMP ARM R-JW | |
| 11 | S35235001 | 1 | 支架销 | SUPPORT PIN, CLAMP | |
| 12 | S35236000 | 1 | 垫圈 3.2 | WASHER, BENDING 3.2 | |
| 13 | 021300306 | 1 | 螺母 M3 | NUT 3 M3 | |
| | | | <用于腰带压脚 L30> | <For waist belt presser L30> | |
| 1 | SA7781001 | 1 | 压脚复合件 L30W | WORK CLAMP SET L30W | |
| 2 | SA7779001 | 1 | 压脚组件 L-L30W | WORK CLAMP ASSY L-L30W | |
| 3 | S43410001 | 1 | 压脚 L-L4W | WORK CLAMP, L-L4W | |
| 4 | SA7726001 | 1 | 夹臂 L-JW | CLAMP ARM L-JW | |
| 5 | S35235001 | 1 | 支架销 | SUPPORT PIN, CLAMP | |
| 6 | S35236000 | 1 | 垫圈 3.2 | WASHER, BENDING 3.2 | |
| 7 | 021300306 | 1 | 螺母 M3 | NUT 3 M3 | |
| 8 | SA7780001 | 1 | 压脚组件 R-L30W | WORK CLAMP ASSY R-L30W | |
| 9 | S43411001 | 1 | 压脚 R-L4W | WORK CLAMP, R-L4W | |
| 10 | SA7727001 | 1 | 夹臂 R-JW | CLAMP ARM R-JW | |
| 11 | S35235001 | 1 | 支架销 | SUPPORT PIN, CLAMP | |
| 12 | S35236000 | 1 | 垫圈 3.2 | WASHER, BENDING 3.2 | |
| 13 | 021300306 | 1 | 螺母 M3 | NUT 3 M3 | |

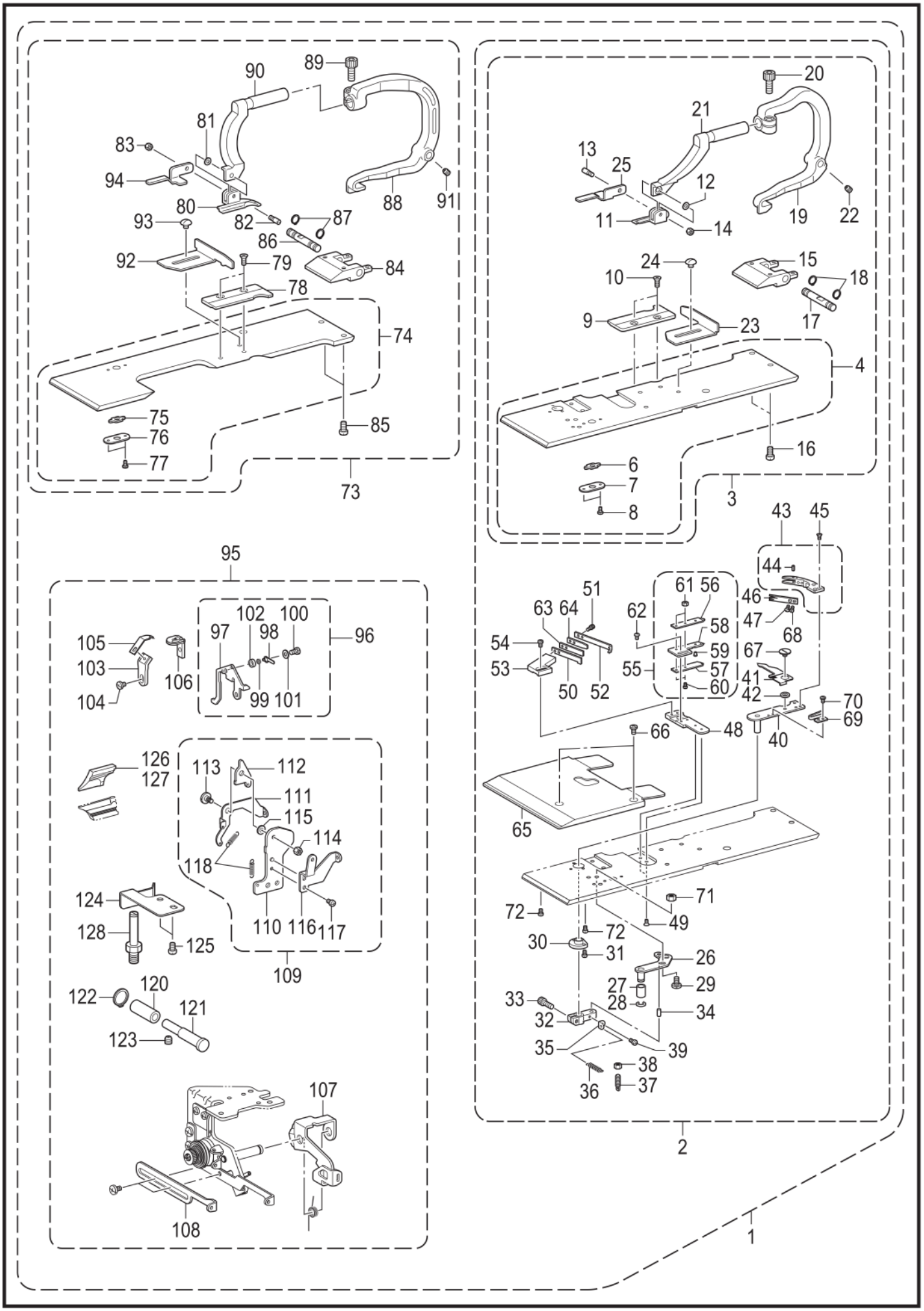
1
2
3
4
6
7
8
9
10
11
12
13
14
15
16
17
18
19
20
21
22
23
24
25
40
41
42
43
44
45
46
47
48
49
50
51
52
53
54
55
56
57
58
59
60
61
62
63
64
65
66
67
68
69
70
71
72
73
74
75
76
77
78
79
80
81
82
83
84
85
86
87
88
89
90
91
92
93
94
95
96
97
98
99
100
101
102
103
104
105
106
107
108
109
110
111
112
113
114
115
116
117
118
120
121
122
123
124
125
126
127
128

## AA4. 附属装置 / Attachment set

| 参照号 | 零部件序号 | 数量 | 零部件名称 | NAME OF PARTS | RM |
|---|---|---|---|---|---|
| | | | <规格变换用零部件> | <For exchange parts> | |
| | | | <用于-02变更为-01规格时> | <Exchange parts from -02 to -01> | |
| 1 | SA7784001 | 1 | 规格变换零部件组 01 | EXCHANGE PARTS SET 01 | |
| 2 | SA7782001 | 1 | 板RS组件(-01) | PLATE ASSY RS 01 | |
| 3 | SA7055001 | 1 | 压脚板总组件 RS30 | WORK CLAMP PLATE RS30 UNIT | |
| 4 | SA7056001 | 1 | 布压板组件 RS | WORK CLAMP PLATE RS ASSY | |
| 6 | S35315001 | 1 | 角块 | OPENING SLIDE BLOCK | |
| 7 | S35316001 | 1 | 角块支撑板 | SLIDE BLOCK SUPPORT PLATE | |
| 8 | 060020416 | 2 | 螺钉 M2X4 | SCREW BIND M2X4 | |
| 9 | SA5673001 | 1 | 针板 R-42 | NEEDLE PLATE R-42 | |
| 10 | S06696004 | 2 | 螺钉 M3X6 | SCREW, FLAT M3X6 | |
| 11 | S39932101 | 1 | 压布 R-30 | CLOTH WORK CLAMP, R-30 | |
| 12 | S35236000 | 1 | 垫圈 3.2 | WASHER, BENDING 3.2 | |
| 13 | S35235001 | 1 | 支架销 | SUPPORT PIN, CLAMP | |
| 14 | 021300306 | 1 | 螺母 M3 | NUT 3 M3 | |
| 15 | SA5560001 | 1 | 夹轴承受板 | CLAMP SHAFT HOLDER | |
| 16 | 062400816 | 2 | 螺钉 M4X8 | SCREW PAN M4X8 | |
| 17 | SA5674001 | 1 | 支点轴 | CLAMP FULCRUM SHAFT | |
| 18 | 048060142 | 2 | 轴用挡圈 C6 | RETAINING RING EXTERNAL C6 | |
| 19 | SA5585001 | 1 | 夹杆 R | CLAMP LEVER R | |
| 20 | 018501236 | 1 | 螺栓 M5X12 | BOLT SOCKET M5X12 | |
| 21 | SA5576001 | 1 | 夹臂 R | CLAMP ARM R | |
| 22 | 014400536 | 2 | 螺钉 M4X5 | SET SCREW SOCKET(CP) M4X5 | |
| 23 | SA7550001 | 1 | 布挡板 R | CROTH GUIDE R | |
| 24 | S35326101 | 1 | 螺钉 M3.5 | SCREW M3.5 | |
| 25 | S35330001 | 1 | 压料板 R | WORK CLAMP PLATE, R | |
| 26 | SA7526001 | 1 | 切线连接杆组件 | THREAD TRIMMER LINK LEVER ASSY | |
| 27 | SA7778001 | 1 | 连接杆滚轮 | LINK LEVER ROLLER | |
| 28 | 137191051 | 1 | 挡圈 | STOP RING | |
| 29 | SA5693001 | 1 | 段螺钉 M4 | SHOULDER SCREW M4 | |
| 30 | S34906100 | 1 | 切线臂管套 | BUSH TR TRIMMER ARM | |
| 31 | 062260516 | 2 | 螺钉 M2.6X5 | SCREW PAN M2.6X5 | |
| 32 | S34905101 | 1 | 切线杆臂 | THREAD CUTTER LEVER ARM | |
| 33 | 018401036 | 1 | 螺栓 M4X10 | BOLT SOCKET M4X10 | |
| 34 | S37858000 | 1 | 针销 4X8 | NEEDLE PIN, 4X8 | |
| 35 | S34903001 | 1 | 弹簧挂钩 | SPRING HOOK | |
| 36 | S34883001 | 1 | 切线弹簧 | SPRING, EXTENSION | |
| 37 | S34902001 | 1 | 弹簧挂钩 | SPRING HOOK | |
| 38 | 021350106 | 1 | 螺母 M3.5 | NUT 1 M3.5 | |
| 39 | 062260406 | 1 | 螺钉 M2.6X4 | SCREW PAN M2.6X4 | |
| 40 | S34901001 | 1 | 切线臂 | THREAD TRIMMER ARM | |
| 41 | S34900001 | 1 | 分线板 | OPENER, ;T-NIPPER | |
| 42 | 153219001 | 1 | 动刀管套 | COLLAR, ;MOVABLE KNIFE | |
| 43 | S34899001 | 1 | 动刀组件 | MOVABLE KNIFE ASSY | |
| 44 | S34898001 | 1 | 弹簧销 1.4 | PIN, SPRING 1.4 | |
| 45 | 141542001 | 3 | 螺钉 3.18 | SCREW 3.18 | |
| 46 | SA7076001 | 1 | 挡线器 | THREAD HANDLER | |
| 47 | S01694001 | 1 | 螺钉 SM2.38X4 | SCREW, FLAT SM2.38X4 | |
| 48 | S34896001 | 1 | 定刀台座 | BRACKET, ;FIXED KNIFE | |
| 49 | 061300416 | 2 | 螺钉 M3X4 | SCREW FLAT M3X4 | |
| 50 | S34895001 | 1 | 定刀 | FIXED KNIFE | |
| 51 | 018260832 | 2 | 螺栓 M2.6X8 | BOLT, SOCKET M2.6X8 | |
| 52 | S34894001 | 1 | 线导向板 | THREAD GUIDE PLATE | |
| 53 | S34893001 | 1 | 定刀安装板 | SETTING BRACKET FIXED KNIFE | |
| 54 | 062300512 | 2 | 螺钉 M3X5 | SCREW PAN M3X5 | |
| 55 | S34889101 | 1 | 夹线组件 | THREAD NIPPER ASSY | |
| 56 | S34890001 | 1 | 夹线 U | THREAD NIPPER, U | |
| 57 | S34891101 | 1 | 夹线 D | THREAD NIPPER, D | |
| 58 | S34888101 | 1 | 夹线 M | THREAD NIPPER, M | |
| 59 | S34892001 | 1 | 分线销 | OPENER PIN | |
| 60 | 062020416 | 2 | 螺钉 M2X4 | SCREW PAN M2X4 | |
| 61 | 021020106 | 2 | 螺母 M2 | NUT 1 M2 | |

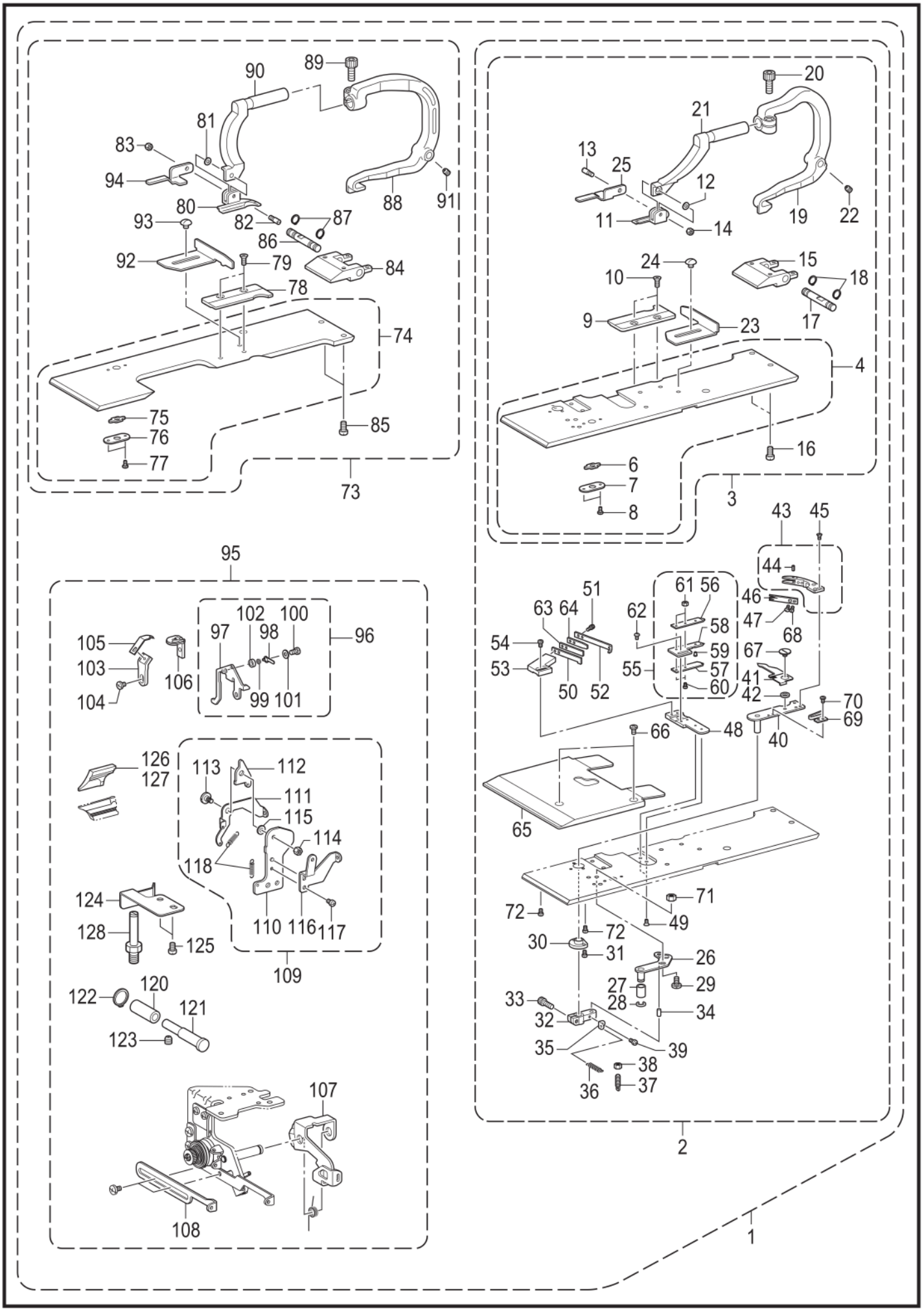
1
2
3
4
6
7
8
9
10
11
12
13
14
15
16
17
18
19
20
21
22
23
24
25
40
41
42
43
44
45
46
47
48
49
50
51
52
53
54
55
56
57
58
59
60
61
62
63
64
65
66
67
68
69
70
71
72
73
74
75
76
77
78
79
80
81
82
83
84
85
86
87
88
89
90
91
92
93
94
95
96
97
98
99
100
101
102
103
104
105
106
107
108
109
110
111
112
113
114
115
116
117
118
120
121
122
123
124
125
126
127
128

9820-940

## AA4. 附属装置 / Attachment set

| 参照号 | 零部件序号 | 数量 | 零部件名称 | NAME OF PARTS | RM |
|---|---|---|---|---|---|
| 62 | 542515001 | 2 | 螺母 M2.6X3.5 | SCREW M2.6X3.5 | |
| 63 | S34887001 | 1 | 定刀板弹簧 | SPRING, PLATE ;F-KNIFE | |
| 64 | S34886001 | 1 | 定刀板弹簧 U | SPRING, U PLATE ;F-KNIFE | |
| 65 | SA7077001 | 1 | 压板 U | PRESSER PLATE U | |
| 66 | 060400516 | 2 | 螺钉 M4X5 | SCREW BIND M4X5 | |
| 67 | 152904001 | 1 | 螺钉 SM4.37 | SCREW, SM4.37 | |
| 68 | 104336003 | 1 | 螺钉 SM2.38 | SCREW, SM2.38 | |
| 69 | S34884000 | 1 | 分线器弹簧 | OPENER SPRING | |
| 70 | 060630312 | 2 | 螺钉 SM2.38-56X3 | SCREW BIND SM2.38-56X3 | |
| 71 | 021400306 | 1 | 六角螺母 M4 | NUT 3 M4 | |
| 72 | 062300416 | 2 | 螺钉 M3X4 | SCREW PAN M3X4 | |
| 73 | SA7060001 | 1 | 压脚板总组件 LS30 | WORK CLAMP PLATE LS30 UNIT | |
| 74 | SA7061001 | 1 | 布压板组件 LS | WORK CLAMP PLATE LS ASSY | |
| 75 | S35315001 | 1 | 角块 | OPENING SLIDE BLOCK | |
| 76 | S35316001 | 1 | 角块支撑板 | SLIDE BLOCK SUPPORT PLATE | |
| 77 | 060020416 | 2 | 螺钉 M2X4 | SCREW BIND M2X4 | |
| 78 | SA5672001 | 1 | 针板 L-42 | NEEDLE PLATE L-42 | |
| 79 | S06696004 | 2 | 螺钉 M3X6 | SCREW, FLAT M3X6 | |
| 80 | S39931101 | 1 | 压布 L-30 | CLOTH WORK CLAMP, L-30 | |
| 81 | S35236000 | 1 | 垫圈 3.2 | WASHER, BENDING 3.2 | |
| 82 | S35235001 | 1 | 支架销 | SUPPORT PIN, CLAMP | |
| 83 | 021300306 | 1 | 螺母 M3 | NUT 3 M3 | |
| 84 | SA5560001 | 1 | 夹轴承受板 | CLAMP SHAFT HOLDER | |
| 85 | 062400816 | 2 | 螺钉 M4X8 | SCREW PAN M4X8 | |
| 86 | SA5674001 | 1 | 支点轴 | CLAMP FULCRUM SHAFT | |
| 87 | 048060142 | 2 | 轴用挡圈 C6 | RETAINING RING EXTERNAL C6 | |
| 88 | SA5671001 | 1 | 夹杆 L | CLAMP LEVER L | |
| 89 | 018501236 | 1 | 螺栓 M5X12 | BOLT SOCKET M5X12 | |
| 90 | SA5577001 | 1 | 夹臂 L | CLAMP ARM L | |
| 91 | 014400536 | 2 | 螺钉 M4X5 | SET SCREW SOCKET(CP) M4X5 | |
| 92 | SA7551001 | 1 | 布挡板 L | CROTH GUIDE L | |
| 93 | S35326101 | 1 | 螺钉 M3.5 | SCREW M3.5 | |
| 94 | S35329001 | 1 | 压料板 L | WORK CLAMP PLATE, L | |
| 95 | SA7783001 | 1 | 变换零部件组 01 | EXCHANGE PARTS SET 01 | |
| 96 | SA7578001 | 1 | 芯线导向组件 C | GIMP THREAD GUIDE C ASSY | |
| 97 | SA7063001 | 1 | 芯线导向 C | GIMP THREAD GUIDE C | |
| 98 | SA7613001 | 1 | 芯线压板 | GIMP THREAD CLAMP PLATE | |
| 99 | SA7614001 | 1 | 芯线调节弹簧 | GIMP THREAD TENSION SPRING | |
| 100 | 062300506 | 1 | 螺钉 M3X5 | SCREW PAN M3X5 | |
| 101 | 025030236 | 1 | 平垫圈 M3 | WASHER PLAIN M 3 | |
| 102 | SA7615001 | 1 | 管套 3 | COLLAR 3 | |
| 103 | SA7064001 | 1 | 上动刀台 | UPPER MOVABLE KNIFE | |
| 104 | 060300416 | 1 | 螺钉 M3X4 | SCREW BIND M3X4 | |
| 105 | S35029001 | 1 | 上动刀 A | UPPER MOVABLE KNIFE, A | |
| 106 | SA7065001 | 1 | 针孔板 1.6 | THROAT PLATE 1.6 | |
| 107 | SA6971001 | 1 | 底线取线手柄 | L-THREAD TAKE-UP GUIDE LENER | |
| 108 | SA6974001 | 1 | 底线导向 C | LOWER THREAD GUIDE C | |
| 109 | SA7068001 | 1 | 芯线过线手柄组件 | GIMP THREAD TAKE-UP G-L ASSY | |
| 110 | SA7069001 | 1 | 芯线过线架 | GIMP THREAD TAKE-UP G-HOLDER | |
| 111 | SA7070001 | 1 | 芯线过线板 | G-THREAD TAKE-UP GUIDE PLATE | |
| 112 | SA7071001 | 1 | 芯线过线作动板 | GIMP THREAD TAKE-UP G-E PLATE | |
| 113 | SA7072001 | 1 | 段螺钉 M4 | SHOULDER SCREW M4 | |
| 114 | 021400306 | 1 | 六角螺母 M4 | NUT 3 M4 | |
| 115 | 158722001 | 1 | 垫圈 4.2 | WASHER PLAIN 4.2 | |
| 116 | SA7073001 | 1 | 芯线导向 | GIMP THREAD GUIDE | |
| 117 | 062300416 | 1 | 螺钉 M3X4 | SCREW PAN M3X4 | |
| 118 | SA7074001 | 2 | 弹簧 | SPRING TORSION | |
| 120 | SA7053001 | 1 | 轴套 | G-THREAD TAKE-UP GUIDE COLLER | |
| 121 | SA7054001 | 1 | 短轴 | G-THREAD TAKE-UP GUIDE SHAFT | |
| 122 | 048050142 | 1 | 轴用挡圈 C5 | RETAINING RING EXTERNAL C5 | |
| 123 | 014400536 | 1 | 螺钉 M4X5 | SET SCREW SOCKET(CP) M4X5 | |

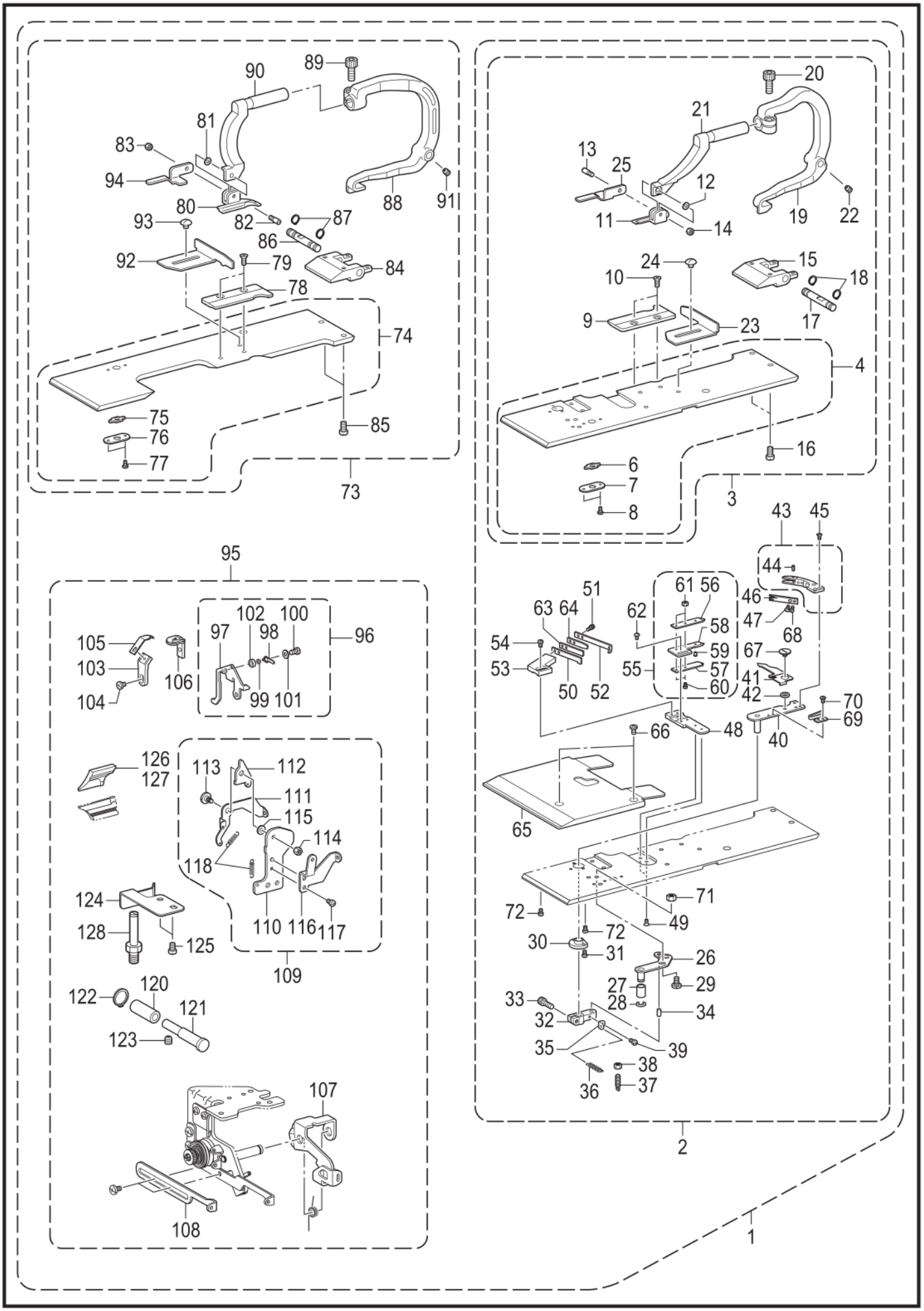
1
2
3
4
6
7
8
9
10
11
12
13
14
15
16
17
18
19
20
21
22
23
24
25
40
41
42
43
44
45
46
47
48
49
50
51
52
53
54
55
56
57
58
59
60
61
62
63
64
65
66
67
68
69
70
71
72
73
74
75
76
77
78
79
80
81
82
83
84
85
86
87
88
89
90
91
92
93
94
95
96
97
98
99
100
101
102
103
104
105
106
107
108
109
110
111
112
113
114
115
116
117
118
120
121
122
123
124
125
126
127
128

9820-940

## AA4. 附属装置 / Attachment set

| 参照号 | 零部件序号 | 数量 | 零部件名称 | NAME OF PARTS | RM |
|---|---|---|---|---|---|
| 124 | SA7555001 | 1 | 板弹簧 | FEED BAR PLATE SPRING | |
| 125 | 062400816 | 2 | 螺钉 M4X8 | SCREW PAN M4X8 | |
| 126 | S37195001 | 1 | 气锤 22 | HAMMER, 22 | |
| 127 | S37199001 | 1 | 气锤 30 | HAMMER, 30 | |
| 128 | SA5584001 | 1 | 气缸螺栓 | CYLINDER SCREW | |

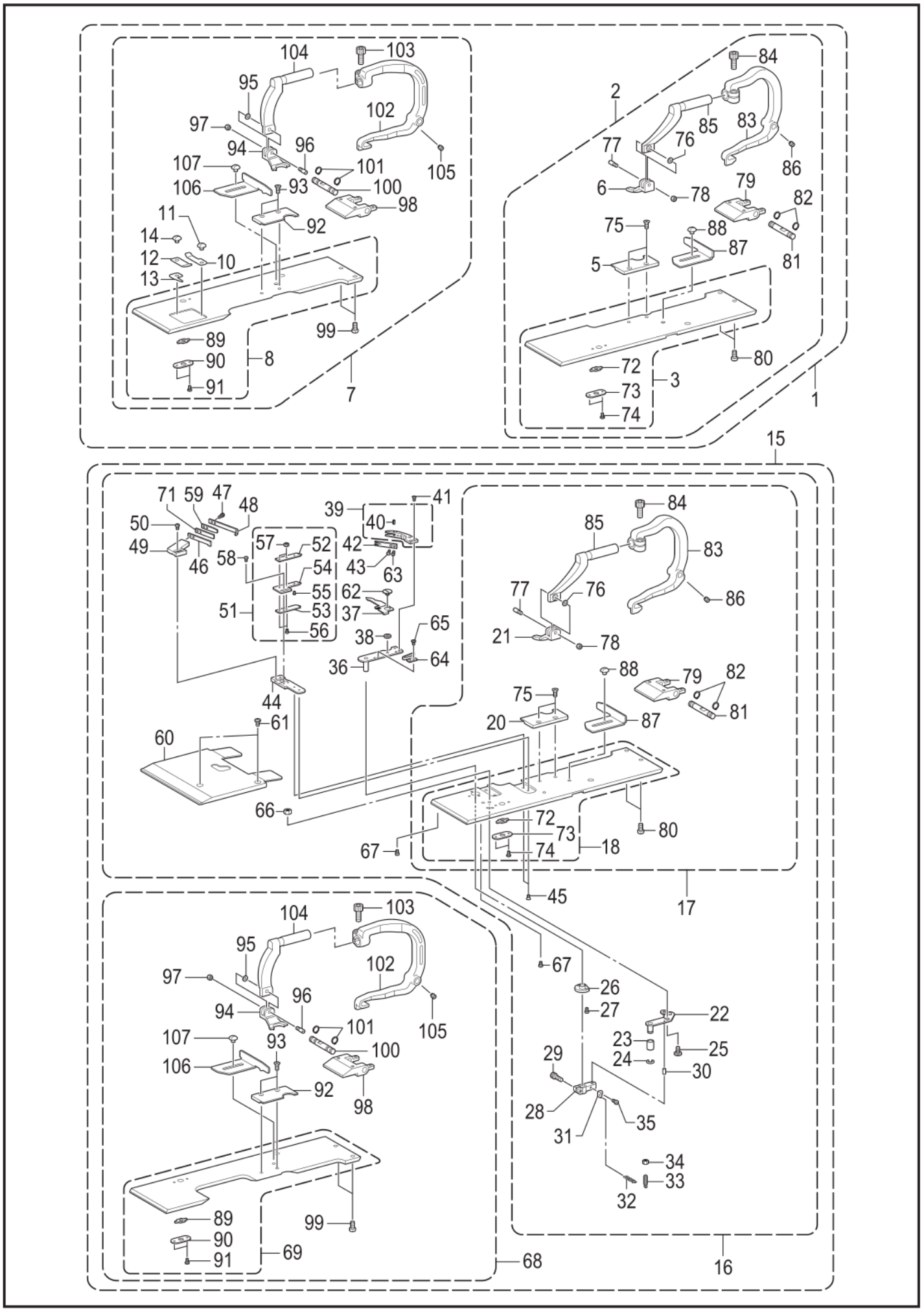
104
103
95
102
97
94
96
107
101
105
106
93
100
98
11
92
14
12
10
13
89
99
90
8
91
7
84
2
85
83
77
76
86
6
78
79
82
75
88
87
81
5
72
80
3
73
74
1
15
71
59
47
48
39
41
50
40
49
46
57
52
42
58
54
43
63
55
62
51
53
37
56
65
38
64
36
44
61
60
66
67
45
17
18
21
20
16
68
69
22
23
25
24
30
29
28
31
35
34
33
32
9820-940

## AA5. 附属装置 / Attachment set

| 参照号 | 零部件序号 | 数量 | 零部件名称 | NAME OF PARTS | RM |
|---|---|---|---|---|---|
| | | | <用于-00菊孔复合件> | <For -00 circular stitch set> | |
| 1 | SA7804001 | 1 | 菊孔变换零部件组 D13 00 | EXCHANGE PARTS SET D13 00 | |
| 2 | SA7802001 | 1 | 布压板RD13组件 | WORK CLAMP PLATE ASSY RD13 | |
| 3 | SA7080001 | 1 | 布压板组件 R | WORK CLAMP PLATE R ASSY | |
| 5 | S41340001 | 1 | 针板 RD13 | NEEDLE PLATE, RD13 | |
| 6 | S41337001 | 1 | 压脚 D13 | WORK CLAMP, D13 | |
| 7 | SA7803101 | 1 | 布压板LD13组件 | WORK CLAMP PLATE ASSY LD13 | |
| 8 | SA7083001 | 1 | 布压板组件 L | WORK CLAMP PLATE L ASSY | |
| 10 | SA7149001 | 1 | 板弹簧 | PLATE SPRING | |
| 11 | S35326101 | 1 | 螺钉 M3.5 | SCREW M3.5 | |
| 12 | SA7150101 | 1 | 切线 A | THREAD TRIMMER A | |
| 13 | SA7151101 | 1 | 切线 B | THREAD TRIMMER B | |
| 14 | S35326101 | 1 | 螺钉 M3.5 | SCREW M3.5 | |
| | | | <用于-01菊孔复合件> | <For -01 circular stitch set> | |
| 15 | SA7808001 | 1 | 菊孔变换零部件组 SD13 01 | EXCHANGE PARTS SET SD13 01 | |
| 16 | SA7806001 | 1 | 压板RSD13组件 | PLATE RSD13 ASSY | |
| 17 | SA7805001 | 1 | 布压板RSD13组件 | WORK CLAMP PLATE ASSY RSD13 | |
| 18 | SA7056001 | 1 | 布压板组件 RS | WORK CLAMP PLATE RS ASSY | |
| 20 | S41340001 | 1 | 针板 RD13 | NEEDLE PLATE, RD13 | |
| 21 | S41337001 | 1 | 压脚 D13 | WORK CLAMP, D13 | |
| 22 | SA7526001 | 1 | 切线连接杆组件 | THREAD TRIMMER LINK LEVER ASSY | |
| 23 | SA7778001 | 1 | 连接杆滚轮 | LINK LEVER ROLLER | |
| 24 | 137191051 | 1 | 挡圈 | STOP RING | |
| 25 | SA5693001 | 1 | 段螺钉 M4 | SHOULDER SCREW M4 | |
| 26 | S34906100 | 1 | 切线臂管套 | BUSH TR TRIMMER ARM | |
| 27 | 062260516 | 2 | 螺钉 M2.6X5 | SCREW PAN M2.6X5 | |
| 28 | S34905101 | 1 | 切线杆臂 | THREAD CUTTER LEVER ARM | |
| 29 | 018401036 | 1 | 螺栓 M4X10 | BOLT SOCKET M4X10 | |
| 30 | S37858000 | 1 | 针销 4X8 | NEEDLE PIN, 4X8 | |
| 31 | S34903001 | 1 | 弹簧挂钩 | SPRING HOOK | |
| 32 | S34883001 | 1 | 切线弹簧 | SPRING, EXTENSION | |
| 33 | S34902001 | 1 | 弹簧挂钩 | SPRING HOOK | |
| 34 | 021350106 | 1 | 螺母 M3.5 | NUT 1 M3.5 | |
| 35 | 062260406 | 1 | 螺钉 M2.6X4 | SCREW PAN M2.6X4 | |
| 36 | S34901001 | 1 | 切线臂 | THREAD TRIMMER ARM | |
| 37 | S34900001 | 1 | 分线板 | OPENER, ;T-NIPPER | |
| 38 | 153219001 | 1 | 动刀管套 | COLLAR, ;MOVABLE KNIFE | |
| 39 | S34899001 | 1 | 动刀组件 | MOVABLE KNIFE ASSY | |
| 40 | S34898001 | 1 | 弹簧销 1.4 | PIN, SPRING 1.4 | |
| 41 | 141542001 | 3 | 螺钉 3.18 | SCREW 3.18 | |
| 42 | SA7076001 | 1 | 挡线器 | THREAD HANDLER | |
| 43 | S01694001 | 1 | 螺钉 SM2.38X4 | SCREW, FLAT SM2.38X4 | |
| 44 | S34896001 | 1 | 定刀台座 | BRACKET, ;FIXED KNIFE | |
| 45 | 061300416 | 2 | 螺钉 M3X4 | SCREW FLAT M3X4 | |
| 46 | S34895001 | 1 | 定刀 | FIXED KNIFE | |
| 47 | 018260832 | 2 | 螺栓 M2.6X8 | BOLT, SOCKET M2.6X8 | |
| 48 | S34894001 | 1 | 线导向板 | THREAD GUIDE PLATE | |
| 49 | S34893001 | 1 | 定刀安装板 | SETTING BRACKET FIXED KNIFE | |
| 50 | 062300512 | 2 | 螺钉 M3X5 | SCREW PAN M3X5 | |
| 51 | S34889101 | 1 | 夹线组件 | THREAD NIPPER ASSY | |
| 52 | S34890001 | 1 | 夹线 U | THREAD NIPPER, U | |
| 53 | S34891101 | 1 | 夹线 D | THREAD NIPPER, D | |
| 54 | S34888101 | 1 | 夹线 M | THREAD NIPPER, M | |
| 55 | S34892001 | 1 | 分线销 | OPENER PIN | |
| 56 | 062020416 | 2 | 螺钉 M2X4 | SCREW PAN M2X4 | |
| 57 | 021020106 | 2 | 螺母 M2 | NUT 1 M2 | |
| 58 | 542515001 | 2 | 螺母 M2.6X3.5 | SCREW M2.6X3.5 | |
| 59 | S34886001 | 1 | 定刀板弹簧 U | SPRING, U PLATE ;F-KNIFE | |
| 60 | SA7077001 | 1 | 压板 U | PRESSER PLATE U | |
| 61 | 060400516 | 2 | 螺钉 M4X5 | SCREW BIND M4X5 | |
| 62 | 152904001 | 1 | 螺钉 SM4.37 | SCREW, SM4.37 | |
| 63 | 104336003 | 1 | 螺钉 SM2.38 | SCREW, SM2.38 | |
| 64 | S34884000 | 1 | 分线器弹簧 | OPENER SPRING | |

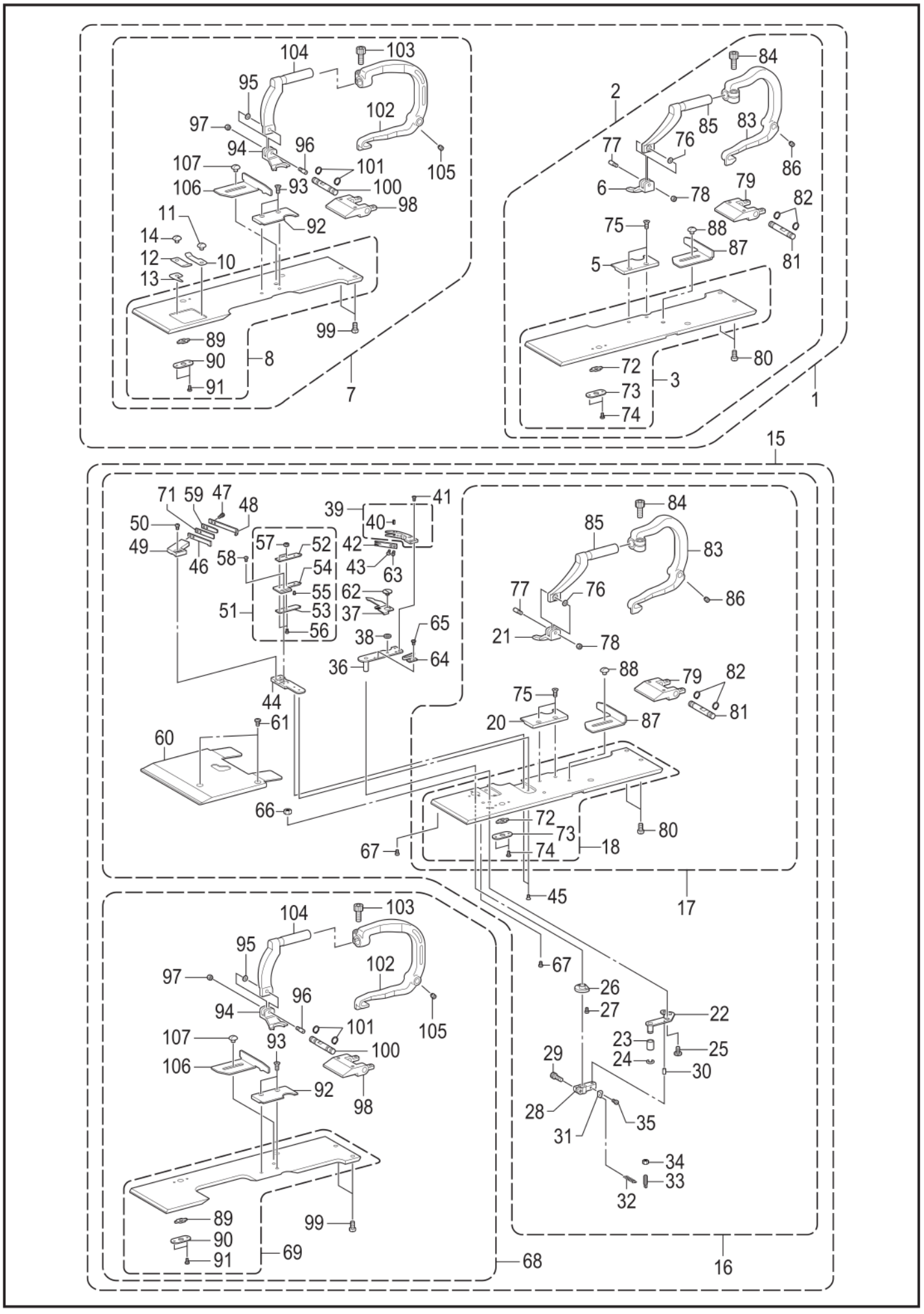
104
103
95
102
97
94
96
107
101
105
106
93
100
98
92
11
14
12
10
13
89
90
91
8
99
7
84
2
85
83
77
76
86
6
78
79
82
75
88
87
81
5
72
73
74
3
80
1
15
71
59
47
48
39
41
50
49
46
58
57
52
42
40
43
63
54
55
62
51
53
37
56
65
38
64
36
44
61
60
66
67
45
17
21
20
18
16
69
68
22
23
25
24
30
29
28
31
35
34
33
32
26
27

9820-940

## AA5. 附属装置 / Attachment set

| 参照号 | 零部件序号 | 数量 | 零部件名称 | NAME OF PARTS | RM |
|---|---|---|---|---|---|
| | | | <用于-01菊孔复合件> | <For -01 circular stitch set> | |
| 65 | 060630312 | 2 | 螺钉 SM2.38-56X3 | SCREW BIND SM2.38-56X3 | |
| 66 | 021400306 | 1 | 六角螺母 M4 | NUT 3 M4 | |
| 67 | 062300416 | 2 | 螺钉 M3X4 | SCREW PAN M3X4 | |
| 68 | SA7807001 | 1 | 布压板LSD13组件 | WORK CLAMP PLATE ASSY LSD13 | |
| 69 | SA7061001 | 1 | 布压板组件 LS | WORK CLAMP PLATE LS ASSY | |
| 71 | S34887001 | 1 | 定刀板弹簧 | SPRING, PLATE ;F-KNIFE | |
| 72 | S35315001 | 1 | 角块 | OPENING SLIDE BLOCK | |
| 73 | S35316001 | 1 | 角块支撑板 | SLIDE BLOCK SUPPORT PLATE | |
| 74 | 060020416 | 2 | 螺钉 M2X4 | SCREW BIND M2X4 | |
| 75 | S06696004 | 2 | 螺钉 M3X6 | SCREW, FLAT M3X6 | |
| 76 | S35236000 | 1 | 垫圈 3.2 | WASHER, BENDING 3.2 | |
| 77 | S35235001 | 1 | 支架销 | SUPPORT PIN, CLAMP | |
| 78 | 021300306 | 1 | 螺母 M3 | NUT 3 M3 | |
| 79 | SA5560001 | 1 | 夹轴承受板 | CLAMP SHAFT HOLDER | |
| 80 | 062400816 | 2 | 螺钉 M4X8 | SCREW PAN M4X8 | |
| 81 | SA5674001 | 1 | 支点轴 | CLAMP FULCRUM SHAFT | |
| 82 | 048060142 | 2 | 轴用挡圈 C6 | RETAINING RING EXTERNAL C6 | |
| 83 | SA5585001 | 1 | 夹杆 R | CLAMP LEVER R | |
| 84 | 018501236 | 1 | 螺栓 M5X12 | BOLT SOCKET M5X12 | |
| 85 | SA6734001 | 1 | 夹臂 R-J | CLAMP ARM R-J | |
| 86 | 014400536 | 2 | 螺钉 M4X5 | SET SCREW SOCKET(CP) M4X5 | |
| 87 | SA7550001 | 1 | 布挡板 R | CROTH GUIDE R | |
| 88 | S35326101 | 1 | 螺钉 M3.5 | SCREW M3.5 | |
| 89 | S35315001 | 1 | 角块 | OPENING SLIDE BLOCK | |
| 90 | S35316001 | 1 | 角块支撑板 | SLIDE BLOCK SUPPORT PLATE | |
| 91 | 060020416 | 2 | 螺钉 M2X4 | SCREW BIND M2X4 | |
| 92 | S41341001 | 1 | 针板 LD13 | NEEDLE PLATE, LD13 | |
| 93 | S06696004 | 2 | 螺钉 M3X6 | SCREW, FLAT M3X6 | |
| 94 | S41337001 | 1 | 压脚 D13 | WORK CLAMP, D13 | |
| 95 | S35236000 | 1 | 垫圈 3.2 | WASHER, BENDING 3.2 | |
| 96 | S35235001 | 1 | 支架销 | SUPPORT PIN, CLAMP | |
| 97 | 021300306 | 1 | 螺母 M3 | NUT 3 M3 | |
| 98 | SA5560001 | 1 | 夹轴承受板 | CLAMP SHAFT HOLDER | |
| 99 | 062400816 | 2 | 螺钉 M4X8 | SCREW PAN M4X8 | |
| 100 | SA5674001 | 1 | 支点轴 | CLAMP FULCRUM SHAFT | |
| 101 | 048060142 | 2 | 轴用挡圈 C6 | RETAINING RING EXTERNAL C6 | |
| 102 | SA5671001 | 1 | 夹杆 L | CLAMP LEVER L | |
| 103 | 018501236 | 1 | 螺栓 M5X12 | BOLT SOCKET M5X12 | |
| 104 | SA6743001 | 1 | 夹臂 L-J | CLAMP ARM L-J | |
| 105 | 014400536 | 2 | 螺钉 M4X5 | SET SCREW SOCKET(CP) M4X5 | |
| 106 | SA7551001 | 1 | 布挡板 L | CROTH GUIDE L | |
| 107 | S35326101 | 1 | 螺钉 M3.5 | SCREW M3.5 | |

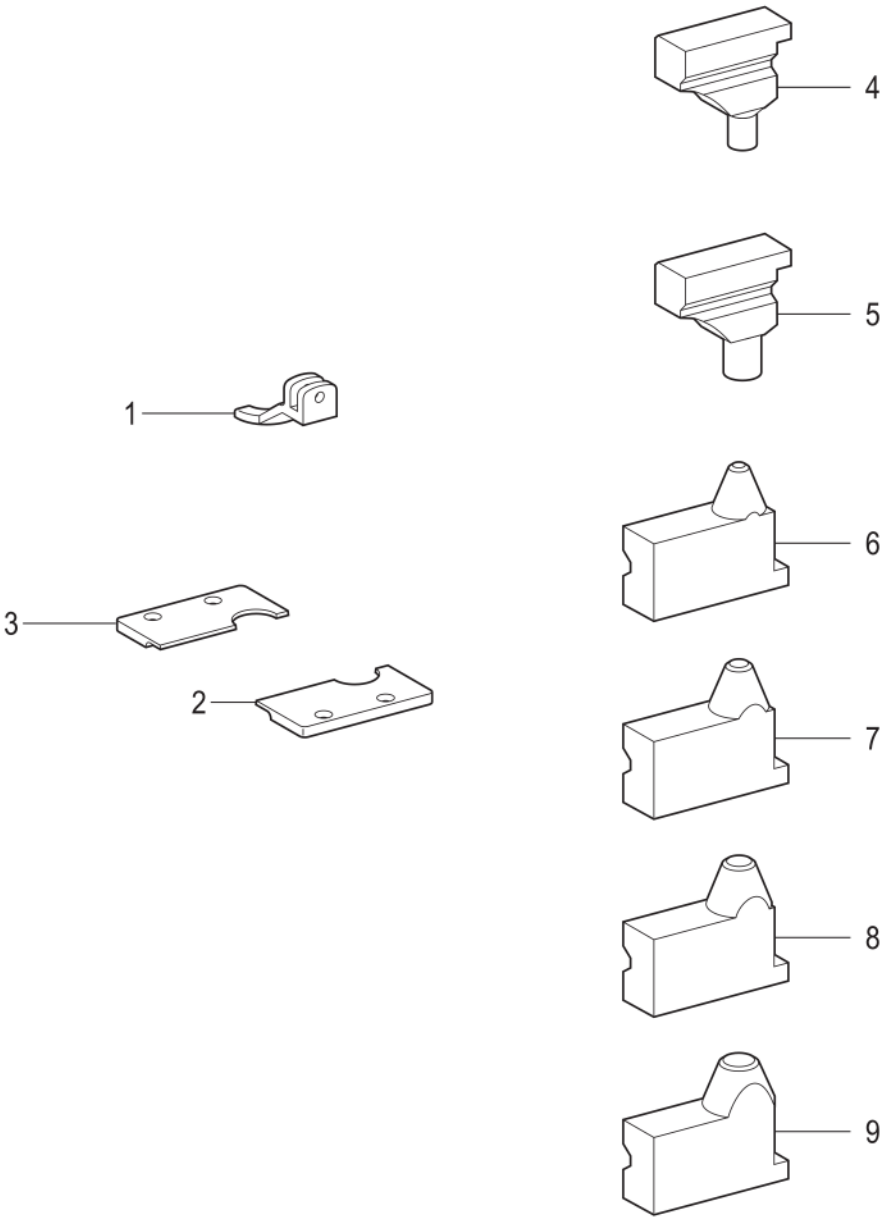


9820-940

## AA6. 附属装置 / Attachment set

| 参照号 | 零部件序号 | 数量 | 零部件名称 | NAME OF PARTS | RM |
|---|---|---|---|---|---|
| | | | **<用于菊孔>** | **<For circular stitch>** | |
| 1 | S41337001 | 1 | 压脚 **D13** | WORK CLAMP, D13 | |
| 2 | S41340001 | 1 | 针板 **RD13** | NEEDLE PLATE, RD13 | |
| 3 | S41341001 | 1 | 针板 **LD13** | NEEDLE PLATE, LD13 | |
| 4 | S41344001 | 1 | 气锤 **D3** | CUTTING BLOCK, D3 | |
| 5 | S41345001 | 1 | 气锤 **D5** | CUTTING BLOCK, D5 | |
| 6 | S41346001 | 1 | 切刀 **D2** | KNIFE, D2 | |
| 7 | S41347001 | 1 | 切刀 **D3** | KNIFE, D3 | |
| 8 | S41348001 | 1 | 切刀 **D4** | KNIFE, D4 | |
| 9 | S41349001 | 1 | 切刀 **D5** | KNIFE, D5 | |

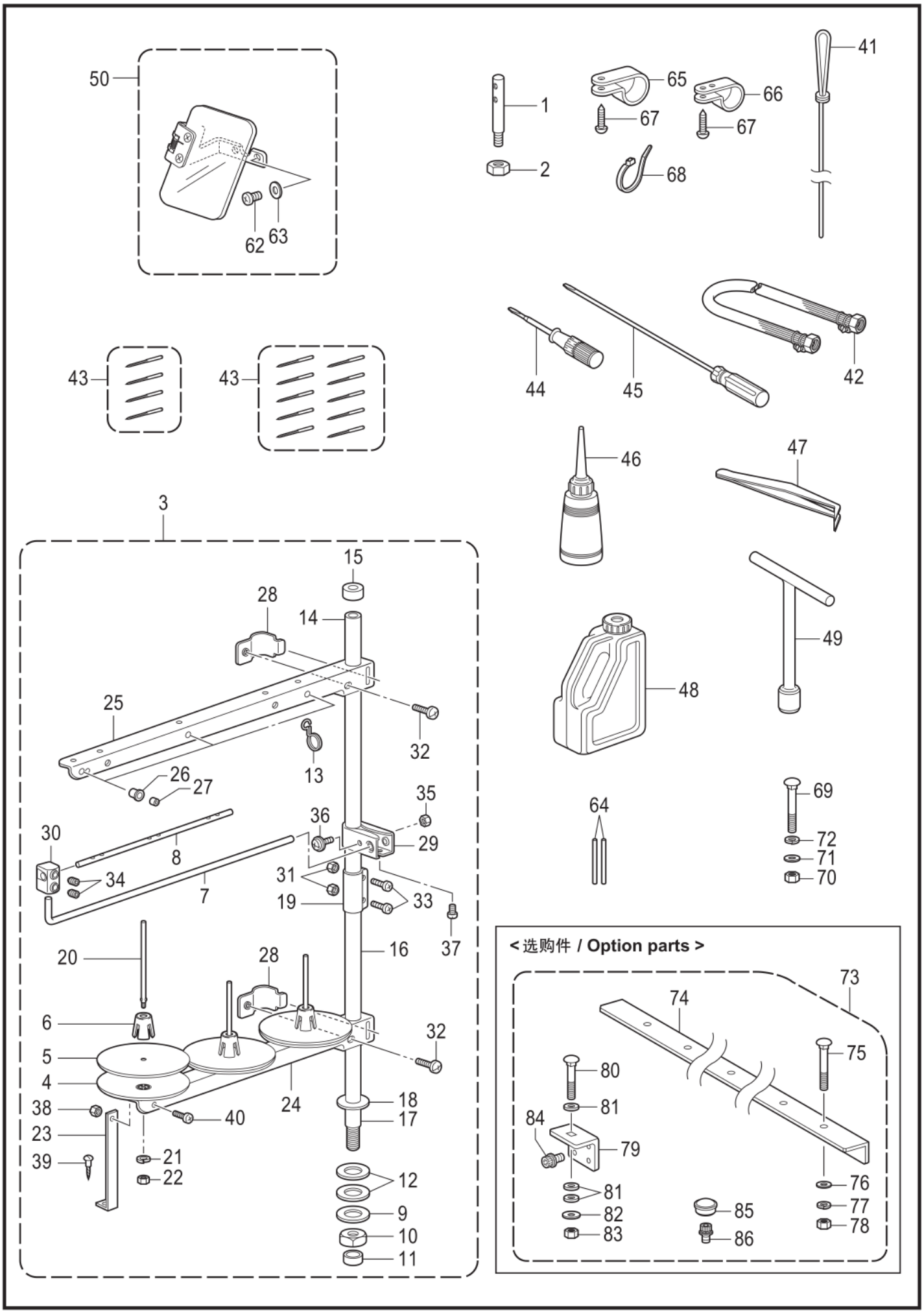
50
62
63
1
2
65
67
66
67
68
41
43
43
44
45
42
46
47
3
15
28
14
25
32
13
26
27
35
36
30
8
34
7
31
19
33
29
37
20
28
16
6
32
5
4
24
18
17
38
40
23
21
39
22
12
9
10
11
48
49
64
69
72
71
70
< 选购件 / Option parts >
73
74
75
80
81
84
79
81
82
83
85
86
76
77
78

9820-910

## Z. 附件 / Accessories

| 参照号 | 零部件序号 | 数量 | 零部件名称 | NAME OF PARTS | RM |
|---|---|---|---|---|---|
| 1 | SA5568001 | 1 | 穿线杆 | THREAD SPOOL PIN | |
| 2 | 021500216 | 1 | 六角螺母 M5 | NUT 2 M5 | |
| 3 | S07558409 | 1 | 线架组件 3DRTHF | COTTON STAND ASSY 3DRTHF | |
| 4 | S51283001 | 3 | 垫圈 | SPOOL STAND BASE | |
| 5 | 150182000 | 3 | 线盘软垫 | SPOOL MAT | |
| 6 | S51282101 | 3 | 线轴缓冲架 | SPOOL CUSHION | |
| 7 | S04109001 | 1 | 过线杆支杆 | THREAD GUIDE SUPPORT BAR | |
| 8 | 142997001 | 1 | 过线杆 3 | THREAD GUIDE, 3 | |
| 9 | 150206002 | 1 | 平垫圈 16 | WASHER PLAIN 16 | |
| 10 | SA6629001 | 1 | 螺母 M16 | NUT M16 | |
| 11 | 150174000 | 1 | 线架支撑管套 | COLUMN CAP | |
| 12 | S01005000 | 2 | 橡皮垫圈 | RUBBER WASHER | |
| 13 | S02747101 | 1 | 弹簧 | SPRING | |
| 14 | 150172003 | 1 | 线架支撑管 | COLUMN PIPE | |
| 15 | 150174000 | 1 | 线架支撑管套 | COLUMN CAP | |
| 16 | 156112003 | 1 | 线架撑管 D | COLUMN PIPE D | |
| 17 | 150207001 | 1 | 线架支撑管 | COLUMN PIPE W/SCREW | |
| 18 | 150206000 | 1 | 平垫圈 16 | WASHER PLAIN 16 | |
| 19 | SA6606001 | 1 | 线架管接头 | COLUMN JOINT | |
| 20 | 150179002 | 3 | 线轴 B | SPOOL SHAFT B | |
| 21 | 028050244 | 3 | 弹簧垫圈 2-5 | WASHER SPRING 2-5 | |
| 22 | 021500104 | 3 | 螺母 M5 | NUT 1 M5 | |
| 23 | 150188009 | 1 | 下过线架支撑板 A | SPOOL HOLDER SUPPORT, A | |
| 24 | SA6610001 | 1 | 过线架 3 | SPOOL HOLDER 3 | |
| 25 | SA6610001 | 1 | 过线架 3 | SPOOL HOLDER 3 | |
| 26 | 150183000 | 3 | 过线管套 | THREAD HANGER BASE | |
| 27 | 142990001 | 3 | 过线架上过线管 | THREAD BUSH | |
| 28 | SA6609001 | 2 | 过线架定位 | SPOOL HOLDER SUPPORTER | |
| 29 | SA6615001 | 1 | 线导向架 | THREAD GUIDE HOLDER | |
| 30 | 138843001 | 1 | 连接器 | JOINT | |
| 31 | 021500104 | 2 | 螺母 M5 | NUT 1 M5 | |
| 32 | 062061604 | 2 | 螺钉 M6X16 | SCREW PAN M6X16 | |
| 33 | 062501404 | 2 | 螺钉 M5X14 | SCREW PAN M5X14 | |
| 34 | 014060632 | 2 | 固定螺钉 M6X6 | SET SCREW SOCKET (CP) M6X6 | |
| 35 | 021500104 | 1 | 螺母 M5 | NUT 1 M5 | |
| 36 | S37037001 | 1 | 螺钉 M5X32 | SCREW PAN (S/P WASHER) M5X32 | |
| 37 | 062061004 | 1 | 螺钉 M6X10 | SCREW PAN M6X10 | |
| 38 | 021500104 | 1 | 螺母 M5 | NUT 1 M5 | |
| 39 | 031452204 | 1 | 圆头木螺钉 M4.5X22 | WOOD SCREW ROUND M4.5X22 | |
| 40 | 062501004 | 1 | 螺钉 M5X10 | SCREW PAN M5X10 | |
| 41 | SA7037001 | 1 | 穿线器 | THREADER | |
| 42 | 149796001 | 1 | 像皮管带接头 | AIR HOSE, W/CONNECTOR | |
| | | | **<用于中国以外>** | **<Except for China>** | |
| | | | **<蓝狮牌机针 DO x 558>** | **<Schmet DO x 558>** | |
| | | | **<用于-00>#100** | **<For -00>#100** | |
| 43 | SA1741016 | 1 | 机针组 S35133(10枚) | NEEDLE 10PIECE ASSY, S35133 | |
| | | | **<用于-01>#90** | **<For -01>#90** | |
| 43 | SA1741014 | 1 | 机针组 S35133(10枚) | NEEDLE 10PIECE ASSY, S35133 | |
| | | | **<用于-02>#110** | **<For -02>#110** | |
| 43 | SA1741018 | 1 | 机针组 S35133(10枚) | NEEDLE 10PIECE ASSY, S35133 | |
| | | | **<用于中国>** | **<For China>** | |
| | | | **<风琴牌机针 DO x 558-NY2>** | **<Organ Needle DO x 558-NY2>** | |
| | | | **<用于-00>#100** | **<For -00>#100** | |
| 43 | SA4858016 | 1 | 机针组 SA4857(4枚) | NEEDLE 4PIECE ASSY, SA4857 | |
| | | | **<用于-01>#90** | **<For -01>#90** | |
| 43 | SA4858014 | 1 | 机针组 SA4857(4枚) | NEEDLE 4PIECE ASSY, SA4857 | |
| | | | **<用于-02>#110** | **<For -02>#110** | |
| 43 | SA4858018 | 1 | 机针组 SA4857(4枚) | NEEDLE 4PIECE ASSY, SA4857 | |

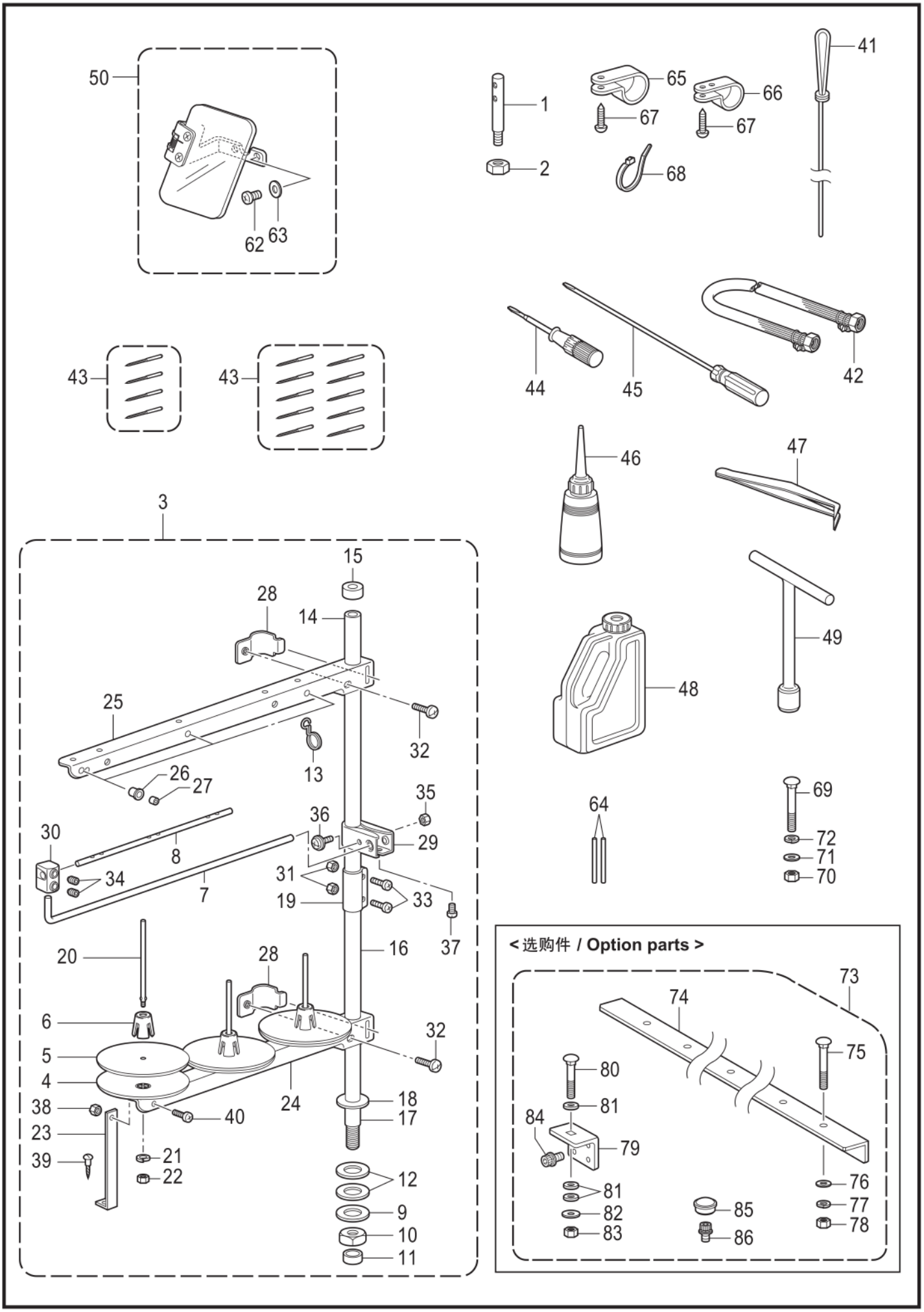
50
62
63
1
2
65
67
66
67
68
41
43
43
44
45
42
46
47
3
15
28
14
25
32
13
26
27
35
36
29
30
8
34
7
31
19
33
37
20
28
16
6
32
5
4
24
18
38
40
17
23
21
39
22
12
9
10
11
48
49
64
69
72
71
70
< 选购件 / Option parts >
73
74
75
80
81
84
79
81
82
83
85
86
76
77
78

9820-910

## Z. 附件 / Accessories

| 参照号 | 零部件序号 | 数量 | 零部件名称 | NAME OF PARTS | RM |
|---|---|---|---|---|---|
| 44 | 118837001 | 1 | 起子 3.4X70 | SCREW-DRIVER, 3.4X70 | |
| 45 | 101572102 | 1 | 起子 5.5X190 | SCREW-DRIVER 5.5X190 | |
| 46 | 114483002 | 1 | 油壶组件 | OILER ASSY | |
| 47 | 117466000 | 1 | 镊子 | PINCETTE | |
| 48 | S55663001 | 1 | 油罐组件 | OIL TANK ASSY | |
| 49 | SA3950001 | 1 | 套筒扳手 | SOCKET WRENCH | |
| 50 | SA4103001 | 1 | 护眼板组件 D | EYE GUARD SET, D | |
| 62 | 062400616 | 2 | 螺钉 M4X6 | SCREW PAN M4X6 | |
| 63 | 026040136 | 2 | 平垫圈 S4 | WASHER PLAIN S 4 | |
| 64 | SA7038001 | 2 | 销 4 | PIN 4 | |
| 65 | 158581000 | 1 | 电线夹 24N | CORD HOLDER, 24N | |
| 66 | S11817000 | 1 | 线夹 NK-18N | CLAMP, NK-18N | |
| 67 | 032461606 | 2 | 木螺钉 M4.5X16 | WOOD SCREW ROUND 2 M4.5X16 | |
| 68 | S04557000 | 1 | 电线夹 PLT1M | BAND, PLT1M | |
| | | | <用于脚踏板> | <For treadle> | |
| 69 | 133740006 | 3 | 螺栓 M6X70 | BOLT SQUARE M6X70 | |
| 70 | 021060106 | 3 | 螺母 M6 | NUT 1 M6 | |
| 71 | 025060236 | 3 | 平垫圈 M6 | WASHER PLAIN M 6 | |
| 72 | 028060246 | 3 | 弹簧垫圈 2-6 | WASHER SPRING 2-6 | |
| | | | <选购件> | <Option parts> | |
| 73 | SA7127001 | 1 | 半沈入复合件 | SUBMERGE SET | |
| 74 | SA7128001 | 2 | L型补强板 | ANGLE L | |
| 75 | 133740006 | 10 | 螺栓 M6X70 | BOLT SQUARE M6X70 | |
| 76 | 025060236 | 10 | 平垫圈 M6 | WASHER PLAIN M 6 | |
| 77 | 028060246 | 10 | 弹簧垫圈 2-6 | WASHER SPRING 2-6 | |
| 78 | 021060106 | 10 | 螺母 M6 | NUT 1 M6 | |
| 79 | SA7129001 | 4 | 底板台支撑板 | BED SUPPORT PLATE P | |
| 80 | 119755001 | 4 | 螺拴 M6X60 | BOLT, M6X60 | |
| 81 | 159458009 | 12 | 橡皮垫 | RUBBER SHEET | |
| 82 | 025060336 | 4 | 平垫圈 L6 | WASHER PLAIN L 6 | |
| 83 | 021060106 | 4 | 螺母 M6 | NUT 1 M6 | |
| 84 | S42445001 | 16 | 螺栓 M8X25 | BOLT SOCKET (S/P WASHER)M8X25 | |
| 85 | SA2929001 | 4 | 橡皮塞 12.5 | RUBBER CAP, 12.5 | |
| 86 | S55477001 | 3 | 螺拴(带垫圈) M6X16 | BOLT SOCKET (S/P WASHER)M6X16 | |

# Sp . 不同规格零部件一览表 / Different parts list

-00规格时可以安装10 - 50mm **10 to 50 mm are available for -00 specification.**
-01规格时可以安装10 - 42mm **10 to 42 mm are available for -01 specification.**

布压脚 / **Work clamp**

| | | | | | |
|---|---|---|---|---|---|
| **(L)** | S37679-001 | S37677-101 | SA5245-101 | SA7086-001 | SA7537-001 |
| **(R)** | S37680-001 | S37678-101 | SA5244-101 | SA7091-001 | SA7536-001 |
| **(-00 · -01)** | < 50mm > 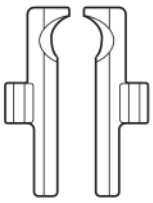 | < 50mm > 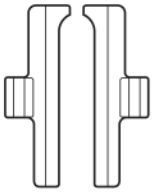 | < 32mm > 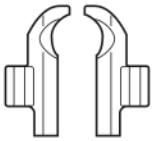 | < 42mm > 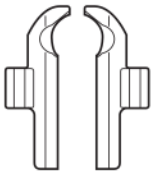 | < 42mm > 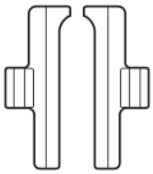 |
| | S35455-201 | S39929-101 | S35197-101 | S39931-101 | |
| | S35454-201 | S39930-101 | S35198-101 | S39932-101 | |
| | < 10 – 18mm > 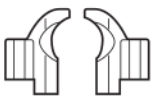 | < 18 – 22mm > 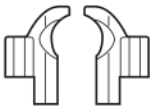 | < 22 – 26mm > 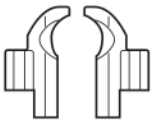 | < 26 – 30mm > 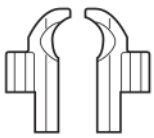 | |
| **(-02)** | SA7087-001 | SA7090-001 | SA6742-001 | SA7088-001 | SA7089-001 |
| | SA7092-001 | SA7095-001 | SA6732-001 | SA7093-001 | SA7094-001 |
| | < 14 – 22mm > 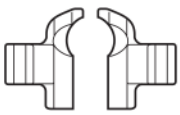 | < 18 – 26mm > 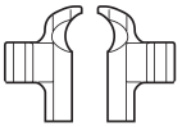 | < 22 – 30mm > 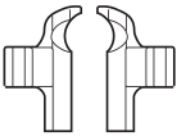 | < 26 – 34mm > 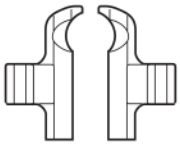 | < 34 – 42mm > 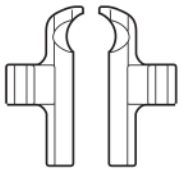 |
| | S43408-001 | S43410-001 | | | |
| | S43409-001 | S43411-001 | | | |
| | L3W < 22 – 26mm >  | L4W < 26 – 30mm > 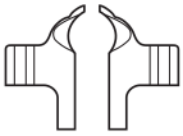 | | | |
| | < 用于腰带压脚 / For waist belt presser > | | | | |

## Sp . 不同规格零部件一览表 / Different parts list

-00规格时42mm和50mm可以通用安装
-01规格时只能安装在42mm

**Both 42 mm and 50 mm are available for -00 specification.**
**Only 42 mm is available for -01 specification.**

针板 / **Needle plate**

| | | | | |
|---|---|---|---|---|
| **(L)** | S37683-101(L-50) | S37681-101(SL-50) | SA5672-001(L-42) | SA7534-001 |
| **(R)** | S37684-101(R-50) | S37682-101(SR-50) | SA5673-001(R-42) | SA7535-001 |
| **(-00 · -01)** | < 50mm > 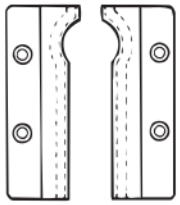 | < 50mm > 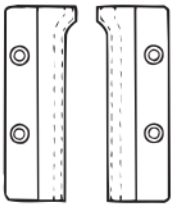 | < 42mm > 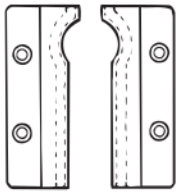 | < 42mm > 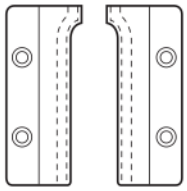 |

| | | | |
|---|---|---|---|
| **(L)** | SA7097-001 | SA7100-001 | |
| **(R)** | SA7102-001 | SA7105-001 | |
| **(-02)** | < 14 – 22mm > 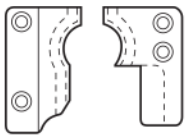 | < 18 – 26mm > 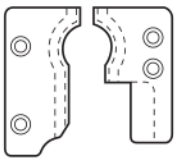 | |
| | SA6741-001 | SA7098-001 | SA7099-001 |
| | SA6731-001 | SA7103-001 | SA7104-001 |
| | < 22 – 30mm > 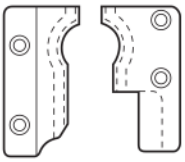 | < 26 – 34mm > 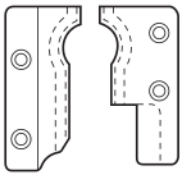 | < 34 – 42mm > 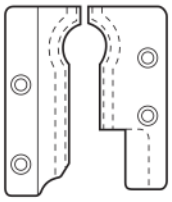 |

气锤 / **Hammer**

| | | | | | | |
|---|---|---|---|---|---|---|
| **(-00 · -01)** | 尺寸 / Size (mm) | 10 | 12 | 14 | 16 |  |
| | 零部件序号 / Code | S37211-001 | S37210-001 | S37209-001 | S37208-001 | |
| | 尺寸 / Size (mm) | 18 | 20 | 22 | 24 | |
| | 零部件序号 / Code | S37194-001 | S35092-001 | S37195-001 | S37196-001 | |
| | 尺寸 / Size (mm) | 26 | 28 | 30 | 32 | |
| | 零部件序号 / Code | S37197-001 | S37198-001 | S37199-001 | S37200-001 | |
| | 尺寸 / Size (mm) | 34 | 36 | 38 | 42 | |
| | 零部件序号 / Code | S37201-001 | S37202-001 | S35093-001 | SA7106-001 | |
| | 尺寸 / Size (mm) | 50 | | | | |
| | 零部件序号 / Code | S35479-001 | | | | |

| | | | | | | |
|---|---|---|---|---|---|---|
| **(-02)** | 尺寸 / Size (mm) | S10 | S12 | S14 | S16 | 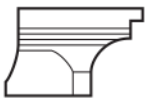 |
| | 零部件序号 / Code | S37701-001 | S37702-001 | S37703-001 | S37704-001 | |
| | 尺寸 / Size (mm) | S18 | S20 | S22 | S24 | |
| | 零部件序号 / Code | S37705-001 | S37706-001 | S37707-001 | S37708-001 | |
| | 尺寸 / Size (mm) | S26 | S28 | | | |
| | 零部件序号 / Code | S37709-001 | S42053-001 | | | |

气锤：标准零部件 / **Hammer : Standard parts**

| | | 装着零部件 / **Preinstalled parts** | | 附带零部件 / **Accessory parts** | |
|---|---|---|---|---|---|
| **(-00,01)** | | 22 | S37195-001 | 30 | S37199-001 |
| **(-02)** | L1826 | S20 | S37706-001 | S24 | S37708-001 |
| | L2230 | S24 | S37708-001 | S28 | S42053-001 |

**切刀 / Knife**

| S35438-101 | S35436-101 | S35481-101 | S35483-101 | S35409-101(S) |
|---|---|---|---|---|
| < 50mm > | < 50mm > | < 50mm > | < 50mm > | < 50mm > |
| 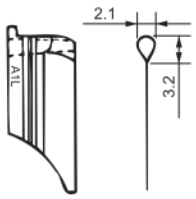 | 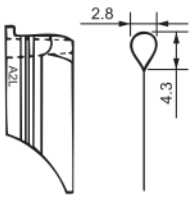 | 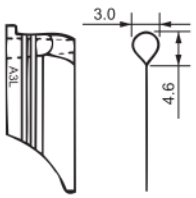 | 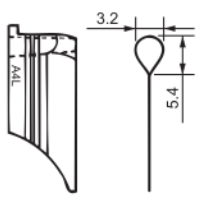 | 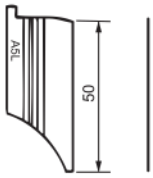 |
| **SA7107-001** | **SA6806-001** | **SA7108-001** | **SA7109-001** | **SA7110-001** |
| < 42mm > | < 42mm > | < 42mm > | < 42mm > | < 42mm > |
| 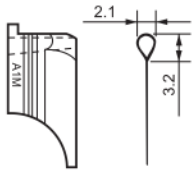 | 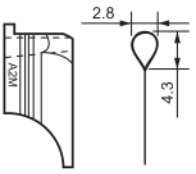 | 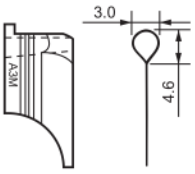 | 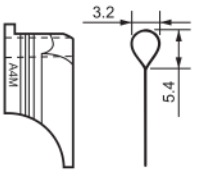 | 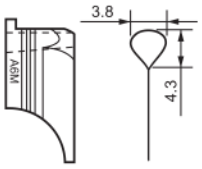 |
| **SA7111-001(S)** | | | | |
| < 42mm > | | | | |
| 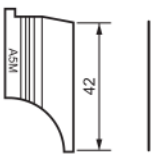 | | | | |

**转盘板 / Throat plate**

| | SA7546-001 | SA7065-001 | SA7567-001 |
|---|---|---|---|
| **(-00 · -01)** | 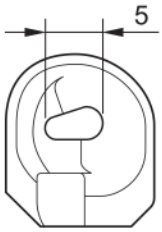 | 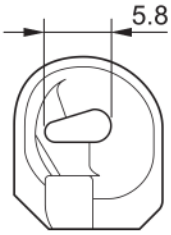 | 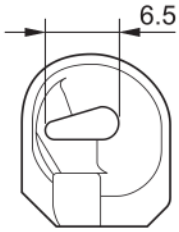 |
| | **S37752-001** | **SA7568-001** | |
| **(-02)** | 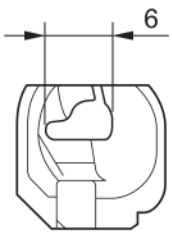 | 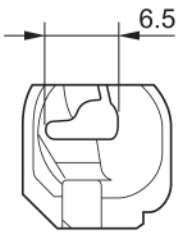 | |

## Wa. 警告标签 / Warning labels

| 警告标签<br>Warning labels | 零部件名称<br>Name of parts | 尺寸<br>Size(mm) | 零部件序号<br>Code |
|---|---|---|---|
|  | 感电标签(6国)<br>Label, elec. shock 6 lang | 50 X 118 | J04115-001 |
|  | 操作注意标签（日／英）<br>Label, caution Jpn / Eng | 52 X 84 | SA0792-001 |
|  | 操作注意标签（中／英）<br>Label, caution Chn / Eng | 52 X 84 | SA0793-001 |
|  | 警告标记<br>Mark, injury | L=16<br>R=0.8 | S36924-001 |
|  | 高温标志<br>Label, high temp | 13 X 20 | J03663-001 |
|  | 接地标记<br>Label, grounding | φ12 | S37060-001 |
|  | PE标记<br>Label, PE | 7.5 X 12.5 | S37059-001 |

| CODE | REF.NO | Page |
|---|---|---|
| 004401003 | A - 48 | 2 |
| | G - 4 | 24 |
| | L - 16 | 34 |
| 008401204 | G - 70 | 26 |
| 012060636 | E - 5 | 14 |
| | E - 17 | 14 |
| | G - 10 | 24 |
| | G - 13 | 24 |
| | G - 26 | 24 |
| | G - 30 | 24 |
| | G - 39 | 24 |
| | G - 57 | 24 |
| | G - 62 | 24 |
| 012061036 | D - 15 | 12 |
| | H - 31 | 28 |
| | H - 44 | 28 |
| | J - 23 | 30 |
| 012500536 | B - 56 | 6 |
| | D - 22 | 12 |
| | F1 - 64 | 16 |
| | H - 26 | 28 |
| | K - 7 | 32 |
| | L - 35 | 34 |
| | M - 16 | 38 |
| | P1 - 43 | 44 |
| | U2 - 32 | 66 |
| 014060632 | K - 21 | 32 |
| | Z - 34 | 98 |
| 014060636 | B - 59 | 8 |
| 014060836 | A - 31 | 2 |
| | A - 33 | 2 |
| | A - 37 | 2 |
| | A - 39 | 2 |
| | H - 29 | 28 |
| | H - 34 | 28 |
| | H - 40 | 28 |
| | H - 46 | 28 |
| | L - 34 | 34 |
| | U1 - 6 | 64 |
| 014300332 | P3 - 27 | 50 |
| | AA2 - 38 | 82 |
| 014300832 | L - 73 | 36 |
| 014400532 | B - 38 | 6 |
| | F1 - 48 | 16 |
| | F1 - 100 | 18 |
| | F2 - 37 | 20 |
| | F2 - 55 | 20 |
| | F3 - 31 | 22 |
| | F3 - 55 | 22 |
| 014400536 | H - 48 | 28 |
| | AA1 - 26 | 78 |
| | AA1 - 80 | 80 |
| | AA2 - 14 | 82 |
| | AA4 - 22 | 86 |
| | AA4 - 91 | 88 |
| | AA4 - 123 | 88 |
| | AA5 - 86 | 94 |
| | AA5 - 105 | 94 |
| 014400632 | X - 3 | 72 |
| 014500632 | X - 16 | 72 |
| 014500836 | H - 39 | 28 |
| | K - 2 | 32 |
| | M - 2 | 38 |

| CODE | REF.NO | Page |
|---|---|---|
| 017400802 | P1 - 51 | 44 |
| | P2 - 27 | 48 |
| 017401415 | P1 - 47 | 44 |
| 017401616 | F1 - 54 | 16 |
| 018061236 | E - 19 | 14 |
| | H - 21 | 28 |
| 018061636 | D - 19 | 12 |
| | G - 45 | 24 |
| | G - 66 | 26 |
| 018084036 | J - 28 | 30 |
| 018260832 | Q1 - 26 | 52 |
| | AA4 - 51 | 86 |
| | AA5 - 47 | 92 |
| 018300836 | L - 58 | 36 |
| 018301236 | D - 26 | 12 |
| 018301436 | L - 10 | 34 |
| 018400636 | B - 61 | 8 |
| | L - 2 | 34 |
| | N - 21 | 40 |
| | N - 31 | 40 |
| | N - 97 | 42 |
| | R - 4 | 56 |
| 018400836 | F1 - 94 | 18 |
| | G - 42 | 24 |
| | N - 53 | 40 |
| | P2 - 34 | 48 |
| | P2 - 36 | 48 |
| | P3 - 18 | 50 |
| | P3 - 31 | 50 |
| | V - 8 | 68 |
| | V - 17 | 68 |
| | AA2 - 42 | 82 |
| 018401036 | B - 7 | 6 |
| | B - 9 | 6 |
| | F3 - 37 | 22 |
| | H - 7 | 28 |
| | P1 - 18 | 44 |
| | P1 - 23 | 44 |
| | Q1 - 8 | 52 |
| | AA1 - 32 | 78 |
| | AA4 - 33 | 86 |
| | AA5 - 29 | 92 |
| 018401236 | H - 14 | 28 |
| 018401436 | G - 23 | 24 |
| | G - 58 | 24 |
| 018401636 | E - 22 | 14 |
| | G - 14 | 24 |
| 018402036 | B - 27 | 6 |
| 018501236 | F1 - 30 | 16 |
| | F2 - 35 | 20 |
| | F2 - 53 | 20 |
| | F3 - 29 | 22 |
| | F3 - 53 | 22 |
| | R - 11 | 56 |
| | AA1 - 24 | 78 |
| | AA1 - 78 | 80 |
| | AA4 - 20 | 86 |
| | AA4 - 89 | 88 |
| | AA5 - 84 | 94 |
| | AA5 - 103 | 94 |
| 018501436 | G - 48 | 24 |
| 018501636 | G - 8 | 24 |
| | G - 44 | 24 |

| CODE | REF.NO | Page |
|---|---|---|
| 018501636 | H - 53 | 28 |
| | H - 56 | 28 |
| | X - 17 | 72 |
| 018502536 | G - 34 | 24 |
| 021020106 | Q1 - 36 | 52 |
| | AA4 - 61 | 86 |
| | AA5 - 57 | 92 |
| 021060106 | A - 19 | 2 |
| | D - 10 | 12 |
| | Z - 70 | 100 |
| | Z - 78 | 100 |
| | Z - 83 | 100 |
| 021300302 | F2 - 29 | 20 |
| | F2 - 47 | 20 |
| | F3 - 23 | 22 |
| | F3 - 47 | 22 |
| 021300306 | L - 38 | 34 |
| | AA1 - 18 | 78 |
| | AA1 - 72 | 78 |
| | AA3 - 7 | 84 |
| | AA3 - 13 | 84 |
| | AA4 - 14 | 86 |
| | AA4 - 83 | 88 |
| | AA5 - 78 | 94 |
| | AA5 - 97 | 94 |
| 021350106 | Q1 - 13 | 52 |
| | Q2 - 20 | 54 |
| | AA1 - 55 | 78 |
| | AA4 - 38 | 86 |
| | AA5 - 34 | 92 |
| 021400202 | F1 - 55 | 16 |
| | Q2 - 8 | 54 |
| | Y - 9 | 74 |
| 021400206 | A - 44 | 2 |
| | H - 20 | 28 |
| | P1 - 19 | 44 |
| | AA1 - 43 | 78 |
| 021400306 | P1 - 48 | 44 |
| | P3 - 6 | 50 |
| | Q1 - 46 | 52 |
| | Q2 - 16 | 54 |
| | AA1 - 51 | 78 |
| | AA4 - 71 | 88 |
| | AA4 - 114 | 88 |
| | AA5 - 66 | 94 |
| 021400316 | L - 79 | 36 |
| 021500104 | Z - 22 | 98 |
| | Z - 31 | 98 |
| | Z - 35 | 98 |
| | Z - 38 | 98 |
| 021500106 | Z - 2 | 98 |
| 021500216 | P1 - 62 | 44 |
| 025030136 | L - 59 | 36 |
| 025030236 | L - 66 | 36 |
| | AA2 - 25 | 82 |
| | AA4 - 101 | 88 |
| 025040136 | G - 15 | 24 |
| 025040236 | M - 18 | 38 |
| | P1 - 53 | 44 |
| | P2 - 29 | 48 |
| | V - 18 | 68 |
| 025060236 | F1 - 109 | 18 |
| | P1 - 27 | 44 |

| CODE | REF.NO | Page |
|---|---|---|
| 025060236 | Z - 71 | 100 |
| | Z - 76 | 100 |
| 025060336 | A - 18 | 2 |
| | Z - 82 | 100 |
| 026040136 | G - 24 | 24 |
| | G - 59 | 24 |
| | L - 14 | 34 |
| | P2 - 35 | 48 |
| | Z - 63 | 100 |
| 026040236 | F1 - 19 | 16 |
| 028040242 | F1 - 57 | 16 |
| 028040246 | A - 46 | 2 |
| | P1 - 52 | 44 |
| | P2 - 28 | 48 |
| 028050244 | Z - 21 | 98 |
| 028060246 | Z - 72 | 100 |
| | Z - 77 | 100 |
| 031452204 | Z - 39 | 98 |
| 031553202 | U1 - 39 | 64 |
| | U2 - 25 | 66 |
| 032461606 | Z - 67 | 100 |
| 047301042 | P2 - 23 | 48 |
| 047502242 | A - 13 | 2 |
| 048025346 | P3 - 22 | 50 |
| | AA2 - 33 | 82 |
| 048030342 | F1 - 25 | 16 |
| | F1 - 46 | 16 |
| | F1 - 112 | 18 |
| | AA2 - 12 | 82 |
| 048050142 | F1 - 27 | 16 |
| | F1 - 99 | 18 |
| | AA2 - 10 | 82 |
| | AA4 - 122 | 88 |
| 048050342 | F1 - 8 | 16 |
| | F1 - 15 | 16 |
| 048060142 | F1 - 110 | 18 |
| | F2 - 33 | 20 |
| | F2 - 51 | 20 |
| | F3 - 27 | 22 |
| | F3 - 35 | 22 |
| | F3 - 51 | 22 |
| | M - 15 | 38 |
| | P1 - 26 | 44 |
| | AA1 - 22 | 78 |
| | AA1 - 30 | 78 |
| | AA1 - 76 | 80 |
| | AA4 - 18 | 86 |
| | AA4 - 87 | 88 |
| | AA5 - 82 | 94 |
| | AA5 - 101 | 94 |
| 048060342 | G - 68 | 26 |
| 048080142 | A - 24 | 2 |
| | A - 26 | 2 |
| | G - 35 | 24 |
| | P2 - 9 | 48 |
| 048100142 | E - 11 | 14 |
| | E - 28 | 14 |
| 048150142 | C - 28 | 10 |
| 048160242 | G - 31 | 24 |
| 048200142 | J - 27 | 30 |
| 048220242 | J - 20 | 30 |
| 048260242 | E - 9 | 14 |
| | E - 26 | 14 |

| CODE | REF.NO | Page |
|---|---|---|
| 048280242 | G - 64 | 26 |
| 048320242 | E - 15 | 14 |
| 048520242 | C - 20 | 10 |
| 052400606 | F1 - 76 | 18 |
| 060020416 | F2 - 23 | 20 |
| | F2 - 42 | 20 |
| | F3 - 19 | 22 |
| | F3 - 43 | 22 |
| | AA1 - 14 | 78 |
| | AA1 - 68 | 78 |
| | AA4 - 8 | 86 |
| | AA4 - 77 | 88 |
| | AA5 - 74 | 94 |
| | AA5 - 91 | 94 |
| 060300416 | L - 41 | 34 |
| | AA4 - 104 | 88 |
| 060300616 | Y - 11 | 74 |
| 060300816 | K - 13 | 32 |
| | K - 17 | 32 |
| | L - 82 | 36 |
| | L - 84 | 36 |
| | AA2 - 19 | 82 |
| 060400516 | L - 69 | 36 |
| | M - 10 | 38 |
| | N - 86 | 42 |
| | P1 - 14 | 44 |
| | P2 - 6 | 48 |
| | P2 - 13 | 48 |
| | Q1 - 41 | 52 |
| | Q2 - 29 | 54 |
| | AA1 - 64 | 78 |
| | AA4 - 66 | 88 |
| | AA5 - 61 | 92 |
| 060400816 | N - 94 | 42 |
| | Y - 13 | 74 |
| 060401016 | L - 24 | 34 |
| 060401216 | A - 12 | 2 |
| 060401416 | L - 13 | 34 |
| 060630312 | Q1 - 45 | 52 |
| | AA4 - 70 | 88 |
| | AA5 - 65 | 94 |
| 061300416 | Q1 - 24 | 52 |
| | AA4 - 49 | 86 |
| | AA5 - 45 | 92 |
| 062020416 | Q1 - 35 | 52 |
| | AA4 - 60 | 86 |
| | AA5 - 56 | 92 |
| 062061004 | Z - 37 | 98 |
| 062061604 | Z - 32 | 98 |
| 062260406 | P3 - 24 | 50 |
| | AA1 - 56 | 78 |
| | AA2 - 35 | 82 |
| | AA4 - 39 | 86 |
| | AA5 - 35 | 92 |
| 062260516 | Q1 - 6 | 52 |
| | Q1 - 14 | 52 |
| | Q2 - 21 | 54 |
| 062260612 | Q2 - 24 | 54 |
| | AA1 - 59 | 78 |
| | AA4 - 31 | 86 |
| | AA5 - 27 | 92 |
| 062300416 | G - 18 | 24 |
| | G - 51 | 24 |
| 062300416 | H - 55 | 28 |
| | P3 - 9 | 50 |
| | Q1 - 47 | 52 |
| | Q2 - 22 | 54 |
| | AA1 - 57 | 78 |
| | AA4 - 72 | 88 |
| | AA4 - 117 | 88 |
| | AA5 - 67 | 94 |
| 062300506 | L - 65 | 36 |
| | AA2 - 24 | 82 |
| | AA4 - 100 | 88 |
| 062300512 | Q1 - 29 | 52 |
| | AA4 - 54 | 86 |
| | AA5 - 50 | 92 |
| 062300616 | B - 42 | 6 |
| 062300816 | V - 2 | 68 |
| | V - 39 | 68 |
| 062301016 | F1 - 21 | 16 |
| | L - 37 | 34 |
| 062351615 | L - 6 | 34 |
| 062400616 | N - 39 | 40 |
| | Z - 62 | 100 |
| 062400816 | A - 41 | 2 |
| | F1 - 20 | 16 |
| | F1 - 56 | 16 |
| | F1 - 102 | 18 |
| | F1 - 107 | 18 |
| | F2 - 31 | 20 |
| | F2 - 49 | 20 |
| | F3 - 25 | 22 |
| | F3 - 49 | 22 |
| | H - 60 | 28 |
| | J - 37 | 30 |
| | M - 17 | 38 |
| | N - 11 | 40 |
| | P1 - 73 | 46 |
| | P2 - 11 | 48 |
| | P3 - 13 | 50 |
| | P3 - 29 | 50 |
| | P3 - 34 | 50 |
| | V - 22 | 68 |
| | V - 24 | 68 |
| | V - 40 | 68 |
| | X - 25 | 72 |
| | AA1 - 20 | 78 |
| | AA1 - 74 | 80 |
| | AA2 - 8 | 82 |
| | AA2 - 40 | 82 |
| | AA4 - 16 | 86 |
| | AA4 - 85 | 88 |
| | AA4 - 125 | 90 |
| | AA5 - 80 | 94 |
| | AA5 - 99 | 94 |
| 062401016 | C - 32 | 10 |
| 062402016 | L - 77 | 36 |
| 062500816 | A - 29 | 2 |
| | J - 30 | 30 |
| | N - 72 | 42 |
| | P1 - 11 | 44 |
| | P1 - 20 | 44 |
| | P1 - 30 | 44 |
| | P1 - 32 | 44 |
| | P1 - 54 | 44 |
| 062500816 | P1 - 60 | 44 |
| | P1 - 71 | 46 |
| 062501004 | Z - 40 | 98 |
| 062501202 | F1 - 32 | 16 |
| 062501216 | A - 3 | 2 |
| | A - 6 | 2 |
| | P1 - 69 | 46 |
| 062501404 | Z - 33 | 98 |
| 070688850 | G - 37 | 24 |
| 081003870 | P3 - 23 | 50 |
| | AA2 - 34 | 82 |
| 081050870 | H - 22 | 28 |
| 0A4261006 | X - 8 | 72 |
| 0A4300805 | L - 83 | 36 |
| 0A4300806 | X - 6 | 72 |
| | X - 14 | 72 |
| 0A4400806 | J - 39 | 30 |
| | N - 10 | 40 |
| | N - 15 | 40 |
| | N - 17 | 40 |
| | N - 19 | 40 |
| | N - 23 | 40 |
| | N - 37 | 40 |
| | N - 43 | 40 |
| | N - 70 | 42 |
| | N - 76 | 42 |
| | P1 - 64 | 44 |
| | P1 - 66 | 44 |
| | U1 - 16 | 64 |
| | U1 - 22 | 64 |
| | V - 4 | 68 |
| | V - 20 | 68 |
| | V - 29 | 68 |
| | V - 32 | 68 |
| | V - 34 | 68 |
| | V - 36 | 68 |
| | Y - 17 | 74 |
| 0A4401006 | X - 12 | 72 |
| 0A4401206 | U1 - 24 | 64 |
| | U1 - 26 | 64 |
| 0A4401606 | A - 8 | 2 |
| 0A4403506 | U2 - 10 | 66 |
| 0A4404006 | U2 - 23 | 66 |
| 0A5300606 | X - 10 | 72 |
| 0A5302005 | V - 7 | 68 |
| 0A5401006 | U2 - 28 | 66 |
| 0B0452006 | W - 6 | 70 |
| 101572102 | Z - 45 | 100 |
| 102630001 | F1 - 4 | 16 |
| | F1 - 11 | 16 |
| 102707002 | P1 - 49 | 44 |
| 104336003 | Q1 - 43 | 52 |
| | AA4 - 68 | 88 |
| | AA5 - 63 | 92 |
| 104450101 | N - 60 | 40 |
| 104821001 | A - 55 | 2 |
| | P1 - 67 | 46 |
| 104833001 | A - 50 | 2 |
| | A - 51 | 2 |
| | J - 15 | 30 |
| 105288001 | L - 44 | 34 |
| 107017001 | A - 45 | 2 |
| | A - 67 | 4 |
| 107155001 | N - 81 | 42 |
| 109763002 | F1 - 7 | 16 |
| | F1 - 14 | 16 |
| 112753001 | N - 74 | 42 |
| 114483002 | Z - 46 | 100 |
| 114486002 | A - 28 | 2 |
| 115947101 | A - 17 | 2 |
| 117466000 | Z - 47 | 100 |
| 118837001 | Z - 44 | 100 |
| 119755001 | Z - 80 | 100 |
| 133740006 | Z - 69 | 100 |
| | Z - 75 | 100 |
| 137191051 | Q1 - 3 | 52 |
| | Q2 - 14 | 54 |
| | AA1 - 49 | 78 |
| | AA4 - 28 | 86 |
| | AA5 - 24 | 92 |
| 138843001 | Z - 30 | 98 |
| 140553102 | B - 20 | 6 |
| 141514002 | B - 18 | 6 |
| 141542001 | Q1 - 20 | 52 |
| | Q2 - 11 | 54 |
| | AA1 - 46 | 78 |
| | AA4 - 45 | 86 |
| | AA5 - 41 | 92 |
| 142990001 | Z - 27 | 98 |
| 142997001 | Z - 8 | 98 |
| 144103009 | P1 - 38 | 44 |
| 144504001 | P1 - 56 | 44 |
| 145446001 | P1 - 36 | 44 |
| | P2 - 17 | 48 |
| | AA2 - 36 | 82 |
| 145446002 | P3 - 25 | 50 |
| 145465001 | B - 4 | 6 |
| 146124001 | Y - 10 | 74 |
| 146202000 | N - 14 | 40 |
| 149287000 | N - 69 | 42 |
| 149547000 | N - 18 | 40 |
| | P1 - 63 | 44 |
| | V - 33 | 68 |
| 149796001 | Z - 42 | 98 |
| 150172003 | Z - 14 | 98 |
| 150174000 | Z - 11 | 98 |
| | Z - 15 | 98 |
| 150179002 | Z - 20 | 98 |
| 150182000 | Z - 5 | 98 |
| 150183000 | Z - 26 | 98 |
| 150188009 | Z - 23 | 98 |
| 150206000 | Z - 18 | 98 |
| 150206002 | Z - 9 | 98 |
| 150207001 | Z - 17 | 98 |
| 150756000 | A - 56 | 2 |
| | A - 57 | 2 |
| | A - 58 | 2 |
| | A - 59 | 2 |
| 152873001 | P1 - 42 | 44 |
| 152904001 | Q1 - 42 | 52 |
| | AA4 - 67 | 88 |
| | AA5 - 62 | 92 |
| 153050000 | N - 47 | 40 |
| 153219001 | Q1 - 17 | 52 |
| | AA4 - 42 | 86 |
| | AA5 - 38 | 92 |

| CODE | REF.NO | Page |
|---|---|---|
| 153274001 | U2 - 8 | 66 |
| 153787001 | Q2 - 30 | 54 |
| | AA1 - 38 | 78 |
| 154465001 | A - 27 | 2 |
| 154562101 | P1 - 57 | 44 |
| | P2 - 19 | 48 |
| 154599000 | P1 - 46 | 44 |
| | P2 - 32 | 48 |
| 155510001 | P1 - 58 | 44 |
| 155559001 | D - 12 | 12 |
| | P2 - 31 | 48 |
| 156112003 | Z - 16 | 98 |
| 156482000 | D - 23 | 12 |
| 158581000 | Z - 65 | 100 |
| 158722001 | P3 - 7 | 50 |
| | AA4 - 115 | 88 |
| 158827009 | A - 14 | 2 |
| 158882001 | A - 60 | 2 |
| 159221101 | P1 - 39 | 44 |
| 159458009 | A - 16 | 2 |
| | Z - 81 | 100 |
| 159805001 | P1 - 37 | 44 |
| | P2 - 18 | 48 |
| 228475000 | B - 52 | 6 |
| | J - 36 | 30 |
| | M - 9 | 38 |
| | N - 92 | 42 |
| | P1 - 68 | 46 |
| | U2 - 31 | 66 |
| | V - 41 | 68 |
| | Y - 18 | 74 |
| 340400001 | V - 25 | 68 |
| 3A6001001 | G - 28 | 24 |
| 525567000 | U1 - 21 | 64 |
| 525664000 | V - 19 | 68 |
| 530138001 | G - 33 | 24 |
| 542515001 | Q1 - 37 | 52 |
| | AA4 - 62 | 88 |
| | AA5 - 58 | 92 |
| 552907000 | N - 42 | 40 |
| 552908000 | U1 - 23 | 64 |
| 554482000 | U1 - 25 | 64 |
| 625010000 | V - 31 | 68 |
| J03663001 | E - 2 | 14 |
| | G - 67 | 26 |
| | X - 19 | 72 |
| | Wa | 104 |
| J03955001 | X - 2 | 72 |
| J03956001 | X - 4 | 72 |
| J03957001 | X - 5 | 72 |
| J03958001 | X - 7 | 72 |
| J03974001 | W - 7 | 70 |
| J04115001 | S1 - 12 | 58 |
| | Wa | 104 |
| J04146001 | W - 8 | 70 |
| J04230001 | X - 11 | 72 |
| J04303001 | X - 15 | 72 |
| J04388001 | X - 13 | 72 |
| S00470000 | U2 - 27 | 66 |
| S00480000 | N - 9 | 40 |
| | N - 41 | 40 |
| | N - 75 | 42 |
| | P1 - 65 | 44 |

| CODE | REF.NO | Page |
|---|---|---|
| S00480000 | U1 - 15 | 64 |
| S01005000 | Z - 12 | 98 |
| S01694001 | Q1 - 22 | 52 |
| | AA4 - 47 | 86 |
| | AA5 - 43 | 92 |
| S02460001 | F1 - 59 | 16 |
| | F1 - 62 | 16 |
| S02657101 | N - 99 | 42 |
| S02699001 | Y - 6 | 74 |
| S02747101 | Z - 13 | 98 |
| S04109001 | Z - 7 | 98 |
| S04159000 | P2 - 33 | 48 |
| | V - 16 | 68 |
| S04557000 | F1 - 73 | 18 |
| | P3 - 30 | 50 |
| | Y - 12 | 74 |
| | AA2 - 41 | 82 |
| | Z - 68 | 100 |
| S05356000 | F3 - 38 | 22 |
| | P1 - 29 | 44 |
| | AA1 - 33 | 78 |
| S06696004 | B - 36 | 6 |
| | F1 - 52 | 16 |
| | F2 - 19 | 20 |
| | F2 - 25 | 20 |
| | F3 - 20 | 22 |
| | F3 - 44 | 22 |
| | AA1 - 15 | 78 |
| | AA1 - 69 | 78 |
| | AA4 - 10 | 86 |
| | AA4 - 79 | 88 |
| | AA5 - 75 | 94 |
| | AA5 - 93 | 94 |
| S07558409 | Z - 3 | 98 |
| S10243000 | J - 38 | 30 |
| | N - 16 | 40 |
| | N - 22 | 40 |
| | N - 36 | 40 |
| | V - 3 | 68 |
| | V - 35 | 68 |
| | Y - 16 | 74 |
| S11426000 | F1 - 86 | 18 |
| | P1 - 8 | 44 |
| S11817000 | Z - 66 | 100 |
| S12004000 | F1 - 58 | 16 |
| | F1 - 61 | 16 |
| | G - 49 | 24 |
| S12053000 | R - 6 | 56 |
| S12104000 | F1 - 72 | 18 |
| S12150000 | F1 - 90 | 18 |
| | F1 - 104 | 18 |
| | AA2 - 5 | 82 |
| S12718000 | K - 20 | 32 |
| S13955000 | F1 - 36 | 16 |
| | F1 - 42 | 16 |
| S14159000 | U2 - 6 | 66 |
| S20681000 | P1 - 41 | 44 |
| S20682102 | P1 - 40 | 44 |
| S20696001 | P3 - 12 | 50 |
| | P3 - 33 | 50 |
| S20698221 | P1 - 55 | 44 |
| S21716001 | Q2 - 26 | 54 |
| | AA1 - 61 | 78 |

| CODE | REF.NO | Page |
|---|---|---|
| S21728001 | A - 15 | 2 |
| S23651001 | C - 4 | 10 |
| | C - 9 | 10 |
| | C - 11 | 10 |
| | C - 14 | 10 |
| | C - 17 | 10 |
| | C - 19 | 10 |
| | C - 24 | 10 |
| | C - 26 | 10 |
| | C - 30 | 10 |
| | J - 6 | 30 |
| | J - 10 | 30 |
| | J - 14 | 30 |
| | X - 23 | 72 |
| S25235001 | C - 5 | 10 |
| S25279101 | M - 20 | 38 |
| S25328001 | B - 53 | 6 |
| | N - 54 | 40 |
| | N - 73 | 42 |
| S29700000 | N - 46 | 40 |
| | N - 49 | 40 |
| S32263001 | A - 52 | 2 |
| | A - 53 | 2 |
| | A - 54 | 2 |
| S34569000 | U1 - 18 | 64 |
| S34883001 | Q1 - 11 | 52 |
| | AA4 - 36 | 86 |
| | AA5 - 32 | 92 |
| S34884000 | Q1 - 44 | 52 |
| | AA4 - 69 | 88 |
| | AA5 - 64 | 92 |
| S34886001 | Q1 - 39 | 52 |
| | AA4 - 64 | 88 |
| | AA5 - 59 | 92 |
| S34887001 | Q1 - 38 | 52 |
| | AA4 - 63 | 88 |
| | AA5 - 71 | 94 |
| S34888101 | Q1 - 33 | 52 |
| | AA4 - 58 | 86 |
| | AA5 - 54 | 92 |
| S34889101 | Q1 - 30 | 52 |
| | AA4 - 55 | 86 |
| | AA5 - 51 | 92 |
| S34890001 | Q1 - 31 | 52 |
| | AA4 - 56 | 86 |
| | AA5 - 52 | 92 |
| S34891101 | Q1 - 32 | 52 |
| | AA4 - 57 | 86 |
| | AA5 - 53 | 92 |
| S34892001 | Q1 - 34 | 52 |
| | AA4 - 59 | 86 |
| | AA5 - 55 | 92 |
| S34893001 | Q1 - 28 | 52 |
| | AA4 - 53 | 86 |
| | AA5 - 49 | 92 |
| S34894001 | Q1 - 27 | 52 |
| | AA4 - 52 | 86 |
| | AA5 - 48 | 92 |
| S34895001 | Q1 - 25 | 52 |
| | AA4 - 50 | 86 |
| | AA5 - 46 | 92 |
| S34896001 | Q1 - 23 | 52 |
| | AA4 - 48 | 86 |

| CODE | REF.NO | Page |
|---|---|---|
| S34896001 | AA5 - 44 | 92 |
| S34898001 | Q1 - 19 | 52 |
| | AA4 - 44 | 86 |
| | AA5 - 40 | 92 |
| S34899001 | Q1 - 18 | 52 |
| | AA4 - 43 | 86 |
| | AA5 - 39 | 92 |
| S34900001 | Q1 - 16 | 52 |
| | AA4 - 41 | 86 |
| | AA5 - 37 | 92 |
| S34901001 | Q1 - 15 | 52 |
| | AA4 - 40 | 86 |
| | AA5 - 36 | 92 |
| S34902001 | Q1 - 12 | 52 |
| | Q2 - 19 | 54 |
| | AA1 - 54 | 78 |
| | AA4 - 37 | 86 |
| | AA5 - 33 | 92 |
| S34903001 | Q1 - 10 | 52 |
| | AA4 - 35 | 86 |
| | AA5 - 31 | 92 |
| S34905101 | Q1 - 7 | 52 |
| | AA4 - 32 | 86 |
| | AA5 - 28 | 92 |
| S34906100 | Q1 - 5 | 52 |
| | AA4 - 30 | 86 |
| | AA5 - 26 | 92 |
| S34913001 | F1 - 93 | 18 |
| S34914101 | F1 - 92 | 18 |
| S34922101 | Y - 7 | 74 |
| S34966001 | Y - 8 | 74 |
| S34968000 | F1 - 22 | 16 |
| S34969001 | F1 - 24 | 16 |
| S34970001 | F1 - 83 | 18 |
| | F1 - 87 | 18 |
| S35001000 | N - 4 | 40 |
| | N - 30 | 40 |
| S35014001 | L - 27 | 34 |
| S35018001 | L - 26 | 34 |
| S35019001 | L - 28 | 34 |
| S35029001 | L - 42 | 34 |
| | AA4 - 105 | 88 |
| S35032101 | L - 49 | 34 |
| | L - 52 | 34 |
| S35033001 | L - 51 | 34 |
| S35034001 | L - 50 | 34 |
| S35035101 | L - 55 | 36 |
| S35036101 | L - 56 | 36 |
| S35091101 | H - 6 | 28 |
| S35092001 | Sp | 102 |
| S35093001 | Sp | 102 |
| S35097101 | H - 52 | 28 |
| S35098000 | H - 54 | 28 |
| S35113001 | B - 32 | 6 |
| S35118101 | B - 19 | 6 |
| S35133014 | B - 21 | 6 |
| S35133016 | B - 21 | 6 |
| S35133018 | B - 21 | 6 |
| S35136001 | B - 40 | 6 |
| S35137001 | B - 39 | 6 |
| S35183000 | G - 16 | 24 |
| S35197101 | Sp | 101 |
| S35198101 | Sp | 101 |

| CODE | REF.NO | Page |
|---|---|---|
| S35218101 | A - 23 | 2 |
| S35221101 | A - 43 | 2 |
| | A - 66 | 4 |
| S35235001 | F2 - 28 | 20 |
| | F2 - 46 | 20 |
| | F3 - 22 | 22 |
| | F3 - 46 | 22 |
| | AA1 - 17 | 78 |
| | AA1 - 71 | 78 |
| | AA3 - 5 | 84 |
| | AA3 - 11 | 84 |
| | AA4 - 13 | 86 |
| | AA4 - 82 | 88 |
| | AA5 - 77 | 94 |
| | AA5 - 96 | 94 |
| S35236000 | F2 - 27 | 20 |
| | F2 - 45 | 20 |
| | F3 - 21 | 22 |
| | F3 - 45 | 22 |
| | AA1 - 16 | 78 |
| | AA1 - 70 | 78 |
| | AA3 - 6 | 84 |
| | AA3 - 12 | 84 |
| | AA4 - 12 | 86 |
| | AA4 - 81 | 88 |
| | AA5 - 76 | 94 |
| | AA5 - 95 | 94 |
| S35239101 | F1 - 28 | 16 |
| S35240001 | F1 - 29 | 16 |
| S35251101 | D - 13 | 12 |
| S35252001 | D - 17 | 12 |
| S35284101 | E - 7 | 14 |
| S35304001 | F1 - 47 | 16 |
| S35305001 | F1 - 45 | 16 |
| S35315001 | F2 - 21 | 20 |
| | F2 - 40 | 20 |
| | F3 - 17 | 22 |
| | F3 - 41 | 22 |
| | AA1 - 12 | 78 |
| | AA1 - 66 | 78 |
| | AA4 - 6 | 86 |
| | AA4 - 75 | 88 |
| | AA5 - 72 | 94 |
| | AA5 - 89 | 94 |
| S35316001 | F2 - 22 | 20 |
| | F2 - 41 | 20 |
| | F3 - 18 | 22 |
| | F3 - 42 | 22 |
| | AA1 - 13 | 78 |
| | AA1 - 67 | 78 |
| | AA4 - 7 | 86 |
| | AA4 - 76 | 88 |
| | AA5 - 73 | 94 |
| | AA5 - 90 | 94 |
| S35324201 | F1 - 78 | 18 |
| S35326101 | F2 - 8 | 20 |
| | F2 - 11 | 20 |
| | F2 - 39 | 20 |
| | F2 - 57 | 20 |
| | F3 - 33 | 22 |
| | F3 - 57 | 22 |
| | L - 71 | 36 |
| | AA1 - 28 | 78 |

| CODE | REF.NO | Page |
|---|---|---|
| S35326101 | AA1 - 82 | 80 |
| | AA4 - 24 | 86 |
| | AA4 - 93 | 88 |
| | AA5 - 11 | 92 |
| | AA5 - 14 | 92 |
| | AA5 - 88 | 94 |
| | AA5 - 107 | 94 |
| S35327001 | F1 - 53 | 16 |
| S35328001 | F1 - 23 | 16 |
| S35329001 | F2 - 20 | 20 |
| | AA4 - 94 | 88 |
| S35330001 | F2 - 15 | 20 |
| | AA4 - 25 | 86 |
| S35332001 | B - 10 | 6 |
| | D - 25 | 12 |
| S35350000 | F1 - 34 | 16 |
| | F1 - 40 | 16 |
| S35351001 | F1 - 106 | 18 |
| | AA2 - 7 | 82 |
| S35360000 | U1 - 2 | 64 |
| S35409101 | Sp | 103 |
| S35410001 | L - 45 | 34 |
| S35412101 | L - 47 | 34 |
| S35413101 | L - 48 | 34 |
| S35426100 | U1 - 3 | 64 |
| S35429101 | F1 - 17 | 16 |
| S35436101 | Sp | 103 |
| S35438101 | Sp | 103 |
| S35454201 | Sp | 101 |
| S35455201 | Sp | 101 |
| S35456101 | F1 - 49 | 16 |
| S35457001 | F1 - 38 | 16 |
| S35458001 | F1 - 44 | 16 |
| S35472101 | L - 88 | 36 |
| S35479001 | Sp | 102 |
| S35481101 | Sp | 103 |
| S35483101 | Sp | 103 |
| S36260000 | Y - 21 | 74 |
| S36345000 | F1 - 79 | 18 |
| S36924001 | A - 70 | 4 |
| | Wa | 104 |
| S37037001 | Z - 36 | 98 |
| S37059001 | S1 - 10 | 58 |
| | Wa | 104 |
| S37060001 | A - 71 | 4 |
| | S1 - 11 | 58 |
| | Wa | 104 |
| S37194001 | Sp | 102 |
| S37195001 | AA4 - 126 | 90 |
| | Sp | 102 |
| S37196001 | Sp | 102 |
| S37197001 | Sp | 102 |
| S37198001 | AA1 - 9 | 76 |
| | Sp | 102 |
| S37199001 | AA4 - 127 | 90 |
| | Sp | 102 |
| S37200001 | AA1 - 10 | 76 |
| | Sp | 102 |
| S37201001 | Sp | 102 |
| S37202001 | AA1 - 9 | 76 |
| | Sp | 102 |
| S37208001 | Sp | 102 |
| S37209001 | Sp | 102 |

| CODE | REF.NO | Page |
|---|---|---|
| S37210001 | Sp | 102 |
| S37211001 | Sp | 102 |
| S37654000 | Q2 - 9 | 54 |
| | AA1 - 44 | 78 |
| S37655101 | Q2 - 10 | 54 |
| | AA1 - 45 | 78 |
| S37660101 | Q2 - 7 | 54 |
| | AA1 - 42 | 78 |
| S37677101 | Sp | 101 |
| S37678101 | Sp | 101 |
| S37679001 | Sp | 101 |
| S37680001 | Sp | 101 |
| S37681101 | Sp | 102 |
| S37682101 | Sp | 102 |
| S37683101 | Sp | 102 |
| S37684101 | Sp | 102 |
| S37701001 | Sp | 102 |
| S37702001 | Sp | 102 |
| S37703001 | Sp | 102 |
| S37704001 | AA1 - 9 | 76 |
| | Sp | 102 |
| S37705001 | Sp | 102 |
| S37706001 | AA1 - 9 | 76 |
| | AA1 - 10 | 76 |
| | Sp | 102 |
| S37707001 | Sp | 102 |
| S37708001 | AA1 - 9 | 76 |
| | AA1 - 10 | 76 |
| | Sp | 102 |
| S37709001 | Sp | 102 |
| S37723101 | L - 43 | 34 |
| | AA2 - 20 | 82 |
| S37724001 | L - 53 | 34 |
| | AA2 - 16 | 82 |
| S37725001 | L - 85 | 36 |
| | AA2 - 17 | 82 |
| S37752001 | L - 70 | 36 |
| | AA2 - 27 | 82 |
| | Sp | 103 |
| S37858000 | Q1 - 9 | 52 |
| | Q2 - 27 | 54 |
| | AA1 - 62 | 78 |
| | AA4 - 34 | 86 |
| | AA5 - 30 | 92 |
| S38170001 | Y - 20 | 74 |
| S38174000 | Y - 22 | 74 |
| S38175101 | Y - 23 | 74 |
| S38176101 | Y - 24 | 74 |
| S39115100 | U2 - 5 | 66 |
| S39116100 | U2 - 2 | 66 |
| S39914001 | Y - 4 | 74 |
| S39929101 | Sp | 101 |
| S39930101 | Sp | 101 |
| S39931101 | F2 - 44 | 20 |
| | AA4 - 80 | 88 |
| | Sp | 101 |
| S39932101 | F2 - 26 | 20 |
| | AA4 - 11 | 86 |
| | Sp | 101 |
| S41251101 | B - 17 | 6 |
| S41310101 | B - 16 | 6 |
| S41337001 | AA5 - 6 | 92 |
| | AA5 - 21 | 92 |

| CODE | REF.NO | Page |
|---|---|---|
| S41337001 | AA5 - 94 | 94 |
| | AA6 - 1 | 96 |
| S41340001 | AA5 - 5 | 92 |
| | AA5 - 20 | 92 |
| | AA6 - 2 | 96 |
| S41341001 | AA5 - 92 | 94 |
| | AA6 - 3 | 96 |
| S41344001 | AA6 - 4 | 96 |
| S41345001 | AA6 - 5 | 96 |
| S41346001 | AA6 - 6 | 96 |
| S41347001 | AA6 - 7 | 96 |
| S41348001 | AA6 - 8 | 96 |
| S41349001 | AA6 - 9 | 96 |
| S42053001 | AA1 - 10 | 76 |
| | Sp | 102 |
| S42445001 | Z - 84 | 100 |
| S42838301 | Y - 19 | 74 |
| S43408001 | AA3 - 3 | 84 |
| | Sp | 101 |
| S43409001 | AA3 - 9 | 84 |
| | Sp | 101 |
| S43410001 | AA3 - 3 | 84 |
| | Sp | 101 |
| S43411001 | AA3 - 9 | 84 |
| | Sp | 101 |
| S47270001 | J - 7 | 30 |
| S47932001 | L - 54 | 34 |
| | AA2 - 18 | 82 |
| S49078001 | L - 87 | 36 |
| S49079001 | L - 89 | 36 |
| S49484000 | S1 - 8 | 58 |
| S49992000 | N - 40 | 40 |
| S50168001 | J - 21 | 30 |
| S51020000 | N - 35 | 40 |
| | N - 102 | 42 |
| S51282101 | Z - 6 | 98 |
| S51283001 | Z - 4 | 98 |
| S52431000 | P2 - 22 | 48 |
| S52832000 | L - 19 | 34 |
| S53488000 | F1 - 35 | 16 |
| | F1 - 41 | 16 |
| S53982000 | U2 - 3 | 66 |
| S55476001 | G - 52 | 24 |
| S55477001 | A - 22 | 2 |
| | Z - 86 | 100 |
| S55481001 | E - 12 | 14 |
| | E - 29 | 14 |
| | N - 68 | 42 |
| S55485001 | Y - 15 | 74 |
| S55487001 | E - 3 | 14 |
| S55663001 | Z - 48 | 100 |
| S56911000 | N - 34 | 40 |
| | N - 101 | 42 |
| S58636001 | A - 49 | 2 |
| | X - 21 | 72 |
| S59219000 | U1 - 32 | 64 |
| S59242001 | B - 11 | 6 |
| | B - 31 | 6 |
| | B - 45 | 6 |
| SA0792001 | A - 69 | 4 |
| | Wa | 104 |
| SA0793001 | A - 68 | 4 |
| | Wa | 104 |

| CODE | REF.NO | Page |
|---|---|---|
| SA1741014 | Z - 43 | 98 |
| SA1741016 | Z - 43 | 98 |
| SA1741018 | Z - 43 | 98 |
| SA1828001 | F1 - 82 | 18 |
| SA2929001 | Z - 85 | 100 |
| SA3040001 | N - 57 | 40 |
| SA3060001 | N - 58 | 40 |
| SA3227001 | P2 - 20 | 48 |
| SA3345001 | P1 - 45 | 44 |
| SA3581101 | S1 - 13 | 58 |
| SA3720101 | S1 - 2 | 58 |
| SA3722001 | S1 - 7 | 58 |
| SA3739501 | S1 - 5 | 58 |
| SA3744001 | S1 - 6 | 58 |
| SA3755201 | S2 - 1 | 60 |
| SA3762001 | S2 - 6 | 60 |
| SA3765001 | S2 - 2 | 60 |
| SA3766001 | S2 - 3 | 60 |
| SA3767001 | S2 - 4 | 60 |
| SA3768001 | S2 - 5 | 60 |
| SA3769001 | S2 - 7 | 60 |
| SA3770001 | S2 - 8 | 60 |
| SA3771001 | S2 - 9 | 60 |
| SA3784001 | Y - 25 | 74 |
| SA3789101 | T - 11 | 62 |
| SA3794001 | S2 - 10 | 60 |
| SA3795001 | S2 - 11 | 60 |
| SA3796001 | S1 - 14 | 58 |
| SA3806001 | S1 - 9 | 58 |
| SA3808101 | S1 - 3 | 58 |
| SA3809001 | T - 8 | 62 |
| SA3812001 | T - 7 | 62 |
| SA3813001 | T - 1 | 62 |
| SA3816001 | T - 6 | 62 |
| SA3819001 | T - 3 | 62 |
| SA3822001 | T - 2 | 62 |
| SA3825001 | T - 4 | 62 |
| SA3827001 | T - 10 | 62 |
| SA3828001 | T - 14 | 62 |
| SA3838009 | T - 13 | 62 |
| SA3950001 | Z - 49 | 100 |
| SA4103001 | Z - 50 | 100 |
| SA4197001 | G - 56 | 24 |
| SA4510001 | T - 12 | 62 |
| SA4629001 | C - 29 | 10 |
| SA4857014 | B - 21 | 6 |
| SA4857016 | B - 21 | 6 |
| SA4857018 | B - 21 | 6 |
| SA4858014 | Z - 43 | 98 |
| SA4858016 | Z - 43 | 98 |
| SA4858018 | Z - 43 | 98 |
| SA5148001 | W - 3 | 70 |
| SA5158101 | C - 33 | 10 |
| SA5244101 | Sp | 101 |
| SA5245101 | Sp | 101 |
| SA5283001 | U2 - 7 | 66 |
| SA5360001 | W - 4 | 70 |
| SA5433101 | V - 49 | 68 |
| SA5434001 | V - 45 | 68 |
| SA5435001 | F1 - 75 | 18 |
| SA5549001 | C - 18 | 10 |
| | X - 22 | 72 |
| SA5552001 | E - 10 | 14 |
| SA5552001 | E - 27 | 14 |
| SA5557001 | F1 - 5 | 16 |
| | F1 - 12 | 16 |
| SA5558001 | F1 - 37 | 16 |
| | F1 - 43 | 16 |
| SA5560001 | F2 - 30 | 20 |
| | F2 - 48 | 20 |
| | F3 - 24 | 22 |
| | F3 - 48 | 22 |
| | AA1 - 19 | 78 |
| | AA1 - 73 | 78 |
| | AA4 - 15 | 86 |
| | AA4 - 84 | 88 |
| | AA5 - 79 | 94 |
| | AA5 - 98 | 94 |
| SA5561001 | F1 - 96 | 18 |
| SA5562001 | G - 17 | 24 |
| | G - 50 | 24 |
| SA5563001 | H - 28 | 28 |
| | H - 38 | 28 |
| | H - 41 | 28 |
| SA5564001 | C - 13 | 10 |
| | C - 16 | 10 |
| | J - 9 | 30 |
| SA5565001 | K - 11 | 32 |
| | M - 6 | 38 |
| SA5566001 | N - 79 | 42 |
| SA5567001 | N - 78 | 42 |
| | N - 80 | 42 |
| SA5568001 | P1 - 61 | 44 |
| | Z - 1 | 98 |
| SA5570001 | B - 2 | 6 |
| | J - 19 | 30 |
| SA5571001 | C - 3 | 10 |
| | J - 5 | 30 |
| | L - 4 | 34 |
| SA5572001 | C - 8 | 10 |
| | J - 26 | 30 |
| SA5573001 | C - 12 | 10 |
| | J - 8 | 30 |
| SA5574001 | E - 8 | 14 |
| | E - 25 | 14 |
| SA5576001 | F2 - 36 | 20 |
| | AA4 - 21 | 86 |
| SA5577001 | F2 - 54 | 20 |
| | AA4 - 90 | 88 |
| SA5578001 | F1 - 13 | 16 |
| SA5579001 | F1 - 6 | 16 |
| SA5582001 | F1 - 31 | 16 |
| SA5583001 | F1 - 18 | 16 |
| SA5584001 | F1 - 26 | 16 |
| | G - 69 | 26 |
| | AA4 - 128 | 90 |
| SA5585001 | F2 - 34 | 20 |
| | F3 - 28 | 22 |
| | AA1 - 23 | 78 |
| | AA4 - 19 | 86 |
| | AA5 - 83 | 94 |
| SA5671001 | F2 - 52 | 20 |
| | F3 - 52 | 22 |
| | AA1 - 77 | 80 |
| | AA4 - 88 | 88 |
| | AA5 - 102 | 94 |
| SA5672001 | F2 - 43 | 20 |
| | AA4 - 78 | 88 |
| | Sp | 102 |
| SA5673001 | F2 - 24 | 20 |
| | AA4 - 9 | 86 |
| | Sp | 102 |
| SA5674001 | F2 - 32 | 20 |
| | F2 - 50 | 20 |
| | F3 - 50 | 22 |
| | AA1 - 75 | 80 |
| | AA4 - 17 | 86 |
| | AA4 - 86 | 88 |
| | AA5 - 81 | 94 |
| | AA5 - 100 | 94 |
| SA5675001 | F1 - 50 | 16 |
| SA5676001 | F1 - 51 | 16 |
| SA5677001 | F1 - 2 | 16 |
| SA5678001 | F1 - 9 | 16 |
| SA5679001 | F1 - 89 | 18 |
| SA5680001 | F1 - 95 | 18 |
| SA5681001 | F1 - 65 | 18 |
| SA5682001 | F1 - 66 | 18 |
| SA5683001 | F1 - 67 | 18 |
| SA5684001 | F1 - 68 | 18 |
| SA5688101 | F1 - 74 | 18 |
| SA5690001 | F1 - 1 | 16 |
| SA5691001 | F1 - 63 | 16 |
| SA5692001 | F1 - 60 | 16 |
| SA5693001 | Q1 - 4 | 52 |
| | Q2 - 15 | 54 |
| | AA1 - 50 | 78 |
| | AA4 - 29 | 86 |
| | AA5 - 25 | 92 |
| SA5696001 | V - 6 | 68 |
| SA5729001 | V - 10 | 68 |
| SA5730001 | V - 11 | 68 |
| SA5731001 | V - 12 | 68 |
| SA5732001 | V - 13 | 68 |
| SA5733001 | V - 21 | 68 |
| SA5734101 | V - 23 | 68 |
| SA5737001 | V - 28 | 68 |
| SA5738001 | V - 30 | 68 |
| SA5740001 | V - 37 | 68 |
| SA5741001 | V - 38 | 68 |
| SA5746001 | A - 1 | 2 |
| SA5747001 | A - 2 | 2 |
| SA5749001 | A - 4 | 2 |
| SA5750001 | A - 5 | 2 |
| SA5751001 | A - 7 | 2 |
| SA5752201 | A - 9 | 2 |
| SA5753001 | A - 10 | 2 |
| SA5754001 | A - 20 | 2 |
| SA5763001 | A - 21 | 2 |
| SA5764001 | A - 25 | 2 |
| SA5765101 | A - 30 | 2 |
| SA5766001 | A - 32 | 2 |
| SA5791101 | A - 34 | 2 |
| SA5792001 | A - 35 | 2 |
| SA5802001 | A - 36 | 2 |
| SA5803001 | A - 40 | 2 |
| SA5804001 | A - 42 | 2 |
| SA5805001 | A - 47 | 2 |
| SA5810001 | A - 61 | 2 |
| SA5811001 | A - 62 | 2 |
| SA5819001 | A - 63 | 4 |
| SA5820001 | A - 64 | 4 |
| SA5821001 | A - 65 | 4 |
| SA5830001 | B - 22 | 6 |
| SA5833001 | B - 26 | 6 |
| SA5834001 | B - 28 | 6 |
| SA5835001 | B - 29 | 6 |
| SA5837001 | B - 34 | 6 |
| SA5842001 | B - 57 | 6 |
| SA5843001 | B - 50 | 6 |
| SA5849001 | B - 51 | 6 |
| SA5850001 | B - 54 | 6 |
| SA5865001 | B - 55 | 6 |
| SA5880001 | B - 58 | 8 |
| SA5889001 | B - 60 | 8 |
| SA5890001 | C - 1 | 10 |
| SA5893001 | C - 2 | 10 |
| SA5897001 | C - 6 | 10 |
| SA5907001 | B - 37 | 6 |
| SA5908001 | B - 41 | 6 |
| SA5919001 | B - 43 | 6 |
| SA5920001 | B - 44 | 6 |
| SA5923001 | B - 46 | 6 |
| SA5936001 | B - 1 | 6 |
| SA6364001 | S1 - 1 | 58 |
| SA6517001 | G - 54 | 24 |
| SA6518001 | G - 55 | 24 |
| SA6521001 | G - 21 | 24 |
| SA6522001 | G - 22 | 24 |
| SA6525001 | U2 - 14 | 66 |
| SA6526101 | U2 - 26 | 66 |
| SA6527001 | F1 - 91 | 18 |
| SA6530001 | V - 1 | 68 |
| SA6531101 | V - 26 | 68 |
| SA6532001 | V - 42 | 68 |
| SA6533001 | V - 14 | 68 |
| SA6535001 | V - 43 | 68 |
| SA6536001 | V - 44 | 68 |
| SA6537001 | P3 - 21 | 50 |
| | AA2 - 32 | 82 |
| SA6538001 | P1 - 50 | 44 |
| SA6539001 | P2 - 26 | 48 |
| SA6542001 | E - 1 | 14 |
| SA6546001 | W - 5 | 70 |
| SA6547001 | W - 1 | 70 |
| SA6550001 | W - 2 | 70 |
| SA6554001 | S1 - 4 | 58 |
| SA6567101 | Y - 1 | 74 |
| SA6573001 | U1 - 36 | 64 |
| SA6606001 | Z - 19 | 98 |
| SA6609001 | Z - 28 | 98 |
| SA6610001 | Z - 24 | 98 |
| | Z - 25 | 98 |
| SA6615001 | Z - 29 | 98 |
| SA6618001 | V - 5 | 68 |
| SA6629001 | Z - 10 | 98 |
| SA6636001 | V - 46 | 68 |
| SA6652001 | B - 3 | 6 |
| SA6653001 | B - 5 | 6 |
| SA6654101 | B - 6 | 6 |
| SA6655001 | B - 8 | 6 |
| SA6656001 | B - 12 | 6 |

| CODE | REF.NO | Page |
|---|---|---|
| SA6657001 | B - 13 | 6 |
| SA6659001 | B - 15 | 6 |
| SA6661001 | C - 7 | 10 |
| SA6662001 | C - 10 | 10 |
| SA6667001 | C - 15 | 10 |
| SA6668001 | C - 21 | 10 |
| SA6669001 | C - 22 | 10 |
| SA6671001 | C - 23 | 10 |
| SA6673001 | C - 25 | 10 |
| SA6674001 | C - 27 | 10 |
| SA6676001 | C - 31 | 10 |
| SA6677001 | D - 1 | 12 |
| SA6678001 | D - 2 | 12 |
| SA6682001 | D - 7 | 12 |
| SA6684001 | D - 8 | 12 |
| SA6685001 | D - 9 | 12 |
| SA6686001 | D - 11 | 12 |
| SA6687001 | D - 14 | 12 |
| SA6688001 | D - 16 | 12 |
| SA6691001 | D - 18 | 12 |
| SA6692001 | D - 20 | 12 |
| SA6693001 | D - 21 | 12 |
| SA6694001 | D - 24 | 12 |
| SA6695001 | E - 4 | 14 |
| SA6699001 | E - 13 | 14 |
| SA6702001 | E - 14 | 14 |
| SA6703001 | E - 16 | 14 |
| SA6704001 | E - 18 | 14 |
| SA6705001 | E - 20 | 14 |
| SA6707001 | E - 21 | 14 |
| SA6711001 | E - 24 | 14 |
| SA6712001 | E - 30 | 14 |
| SA6713001 | E - 31 | 14 |
| SA6714001 | E - 32 | 14 |
| SA6718001 | AA2 - 3 | 82 |
| SA6719001 | F1 - 103 | 18 |
| | AA2 - 4 | 82 |
| SA6720001 | F1 - 105 | 18 |
| | AA2 - 6 | 82 |
| SA6721001 | F1 - 108 | 18 |
| | AA2 - 9 | 82 |
| SA6726001 | F1 - 111 | 18 |
| | AA2 - 11 | 82 |
| SA6727001 | F1 - 77 | 18 |
| SA6728001 | F3 - 1 | 22 |
| | AA1 - 3 | 76 |
| SA6729001 | F3 - 15 | 22 |
| | AA1 - 11 | 78 |
| SA6731001 | F3 - 2 | 22 |
| | AA1 - 4 | 76 |
| | Sp | 102 |
| SA6732001 | F3 - 3 | 22 |
| | AA1 - 5 | 76 |
| | Sp | 101 |
| SA6733001 | F3 - 26 | 22 |
| | AA1 - 21 | 78 |
| SA6734001 | F3 - 30 | 22 |
| | AA1 - 25 | 78 |
| | AA5 - 85 | 94 |
| SA6735001 | F3 - 34 | 22 |
| | AA1 - 29 | 78 |
| SA6736001 | F3 - 36 | 22 |
| | AA1 - 31 | 78 |
| SA6737001 | F3 - 39 | 22 |
| | AA1 - 34 | 78 |
| SA6738001 | F3 - 4 | 22 |
| | AA1 - 6 | 76 |
| SA6739001 | F3 - 5 | 22 |
| | F3 - 12 | 22 |
| | AA1 - 65 | 78 |
| SA6741001 | F3 - 6 | 22 |
| | AA1 - 7 | 76 |
| | Sp | 102 |
| SA6742001 | F3 - 7 | 22 |
| | AA1 - 8 | 76 |
| | Sp | 101 |
| SA6743001 | F3 - 54 | 22 |
| | AA1 - 79 | 80 |
| | AA5 - 104 | 94 |
| SA6744001 | G - 1 | 24 |
| SA6745001 | G - 2 | 24 |
| SA6747001 | G - 5 | 24 |
| SA6748001 | G - 6 | 24 |
| SA6749001 | G - 7 | 24 |
| SA6750001 | G - 9 | 24 |
| SA6751101 | G - 11 | 24 |
| SA6752101 | G - 12 | 24 |
| SA6753001 | G - 19 | 24 |
| SA6754001 | G - 20 | 24 |
| SA6755001 | G - 25 | 24 |
| SA6756001 | G - 27 | 24 |
| SA6757001 | G - 29 | 24 |
| SA6760001 | G - 32 | 24 |
| SA6761001 | G - 36 | 24 |
| SA6762001 | G - 38 | 24 |
| SA6763001 | G - 40 | 24 |
| SA6764001 | G - 41 | 24 |
| SA6765001 | G - 43 | 24 |
| SA6766001 | G - 46 | 24 |
| SA6767001 | G - 47 | 24 |
| SA6768001 | G - 53 | 24 |
| SA6769001 | G - 60 | 24 |
| SA6770001 | G - 61 | 24 |
| SA6771001 | G - 63 | 24 |
| SA6772001 | G - 65 | 26 |
| SA6773101 | H - 1 | 28 |
| SA6776301 | H - 8 | 28 |
| SA6777001 | H - 9 | 28 |
| SA6778301 | H - 10 | 28 |
| SA6781001 | H - 13 | 28 |
| SA6782001 | H - 15 | 28 |
| SA6783001 | H - 16 | 28 |
| SA6784001 | H - 17 | 28 |
| SA6785001 | H - 18 | 28 |
| SA6786001 | H - 19 | 28 |
| SA6787001 | H - 23 | 28 |
| SA6789001 | H - 25 | 28 |
| SA6790001 | H - 27 | 28 |
| SA6791001 | H - 30 | 28 |
| SA6792001 | H - 32 | 28 |
| SA6793001 | H - 33 | 28 |
| SA6794001 | H - 35 | 28 |
| SA6795001 | H - 36 | 28 |
| SA6797001 | H - 42 | 28 |
| SA6798001 | H - 43 | 28 |
| SA6799001 | H - 45 | 28 |
| SA6800001 | H - 47 | 28 |
| | AA2 - 13 | 82 |
| SA6801301 | H - 49 | 28 |
| SA6804001 | H - 57 | 28 |
| SA6805001 | H - 58 | 28 |
| SA6806001 | H - 61 | 28 |
| | Sp | 103 |
| SA6807001 | J - 1 | 30 |
| SA6809001 | J - 3 | 30 |
| SA6810001 | J - 4 | 30 |
| SA6812001 | J - 11 | 30 |
| SA6814001 | J - 13 | 30 |
| SA6815001 | J - 16 | 30 |
| SA6817001 | J - 18 | 30 |
| SA6819001 | J - 22 | 30 |
| SA6821001 | J - 25 | 30 |
| SA6822001 | J - 29 | 30 |
| SA6823001 | J - 31 | 30 |
| SA6824001 | J - 32 | 30 |
| SA6825001 | J - 33 | 30 |
| SA6826001 | J - 34 | 30 |
| SA6827001 | J - 35 | 30 |
| SA6828001 | K - 1 | 32 |
| SA6829001 | K - 4 | 32 |
| SA6830001 | K - 5 | 32 |
| SA6831001 | K - 6 | 32 |
| SA6832101 | K - 18 | 32 |
| SA6833001 | K - 19 | 32 |
| SA6834001 | K - 8 | 32 |
| SA6835001 | K - 9 | 32 |
| SA6836001 | K - 10 | 32 |
| SA6837001 | K - 12 | 32 |
| SA6838001 | K - 14 | 32 |
| SA6839001 | K - 15 | 32 |
| SA6840001 | K - 16 | 32 |
| SA6841001 | L - 1 | 34 |
| SA6844001 | L - 3 | 34 |
| SA6845001 | L - 5 | 34 |
| SA6848001 | L - 7 | 34 |
| SA6849001 | L - 8 | 34 |
| SA6851001 | L - 11 | 34 |
| SA6852001 | L - 12 | 34 |
| SA6853001 | L - 15 | 34 |
| SA6857001 | L - 20 | 34 |
| SA6858001 | L - 21 | 34 |
| SA6859001 | L - 23 | 34 |
| SA6860001 | L - 25 | 34 |
| SA6861001 | L - 29 | 34 |
| SA6863001 | L - 31 | 34 |
| SA6864001 | L - 32 | 34 |
| SA6865001 | L - 33 | 34 |
| SA6866001 | L - 36 | 34 |
| SA6867001 | L - 39 | 34 |
| SA6868001 | AA2 - 15 | 82 |
| SA6868101 | L - 91 | 36 |
| SA6872001 | L - 57 | 36 |
| SA6873001 | L - 68 | 36 |
| | AA2 - 21 | 82 |
| SA6874001 | L - 62 | 36 |
| SA6875001 | L - 72 | 36 |
| SA6876001 | L - 74 | 36 |
| SA6877001 | L - 75 | 36 |
| SA6878001 | L - 76 | 36 |
| SA6879001 | L - 78 | 36 |
| SA6880001 | L - 80 | 36 |
| SA6881001 | L - 81 | 36 |
| SA6882001 | M - 1 | 38 |
| SA6883101 | M - 3 | 38 |
| SA6885001 | M - 5 | 38 |
| SA6886001 | M - 7 | 38 |
| | N - 77 | 42 |
| SA6887001 | M - 8 | 38 |
| SA6888001 | M - 12 | 38 |
| SA6890001 | M - 14 | 38 |
| SA6891001 | M - 19 | 38 |
| SA6892001 | M - 21 | 38 |
| SA6893001 | N - 1 | 40 |
| SA6896001 | N - 5 | 40 |
| SA6897001 | N - 6 | 40 |
| SA6898001 | N - 7 | 40 |
| SA6899001 | N - 8 | 40 |
| SA6900001 | N - 12 | 40 |
| SA6901101 | N - 13 | 40 |
| SA6902001 | N - 20 | 40 |
| SA6903001 | N - 24 | 40 |
| SA6904001 | N - 25 | 40 |
| SA6906001 | N - 27 | 40 |
| SA6907001 | N - 28 | 40 |
| SA6908001 | N - 29 | 40 |
| SA6909001 | N - 32 | 40 |
| SA6910001 | N - 33 | 40 |
| SA6911001 | N - 38 | 40 |
| SA6912001 | N - 44 | 40 |
| SA6913001 | N - 45 | 40 |
| SA6914001 | N - 48 | 40 |
| SA6915001 | N - 50 | 40 |
| SA6918001 | N - 51 | 40 |
| SA6919001 | N - 52 | 40 |
| SA6920001 | N - 56 | 40 |
| SA6922001 | N - 59 | 40 |
| SA6923001 | N - 61 | 40 |
| SA6924001 | N - 62 | 40 |
| SA6925001 | N - 63 | 40 |
| SA6926001 | N - 64 | 40 |
| SA6927001 | N - 65 | 40 |
| SA6928001 | N - 66 | 40 |
| SA6929001 | N - 67 | 40 |
| SA6930001 | N - 71 | 42 |
| SA6932001 | N - 82 | 42 |
| SA6936001 | N - 87 | 42 |
| SA6937101 | N - 88 | 42 |
| SA6938001 | N - 89 | 42 |
| SA6939001 | N - 90 | 42 |
| SA6940001 | N - 91 | 42 |
| SA6941001 | N - 93 | 42 |
| SA6942001 | N - 96 | 42 |
| SA6944001 | P1 - 2 | 44 |
| SA6945001 | P1 - 3 | 44 |
| SA6947101 | P1 - 5 | 44 |
| SA6948101 | P1 - 6 | 44 |
| SA6949001 | P1 - 7 | 44 |
| SA6950001 | P1 - 9 | 44 |
| SA6951001 | P1 - 12 | 44 |
| SA6952001 | P1 - 13 | 44 |
| SA6953001 | P1 - 15 | 44 |
| SA6954001 | P1 - 16 | 44 |

| CODE | REF.NO | Page |
|---|---|---|
| SA6955001 | P1 - 21 | 44 |
| SA6956101 | P1 - 24 | 44 |
| SA6957001 | P1 - 25 | 44 |
| SA6958001 | P1 - 28 | 44 |
| SA6959001 | P1 - 31 | 44 |
| SA6960101 | P1 - 33 | 44 |
| SA6961001 | P1 - 34 | 44 |
| SA6962001 | P1 - 35 | 44 |
| SA6963001 | P1 - 59 | 44 |
| SA6965001 | P1 - 70 | 46 |
| SA6966001 | P1 - 72 | 46 |
| SA6969101 | P2 - 7 | 48 |
| SA6970001 | P2 - 8 | 48 |
| SA6971001 | P2 - 4 | 48 |
| | AA4 - 107 | 88 |
| SA6972001 | P2 - 10 | 48 |
| SA6973001 | P2 - 12 | 48 |
| SA6974001 | P2 - 5 | 48 |
| | AA4 - 108 | 88 |
| SA6975101 | P2 - 15 | 48 |
| SA6977001 | P2 - 21 | 48 |
| SA6979001 | P2 - 25 | 48 |
| SA6980001 | P2 - 30 | 48 |
| SA6981001 | P3 - 11 | 50 |
| | P3 - 32 | 50 |
| SA6982001 | P3 - 17 | 50 |
| | AA2 - 29 | 82 |
| SA6983001 | AA2 - 30 | 82 |
| SA6983101 | P3 - 19 | 50 |
| SA6984001 | P3 - 20 | 50 |
| | AA2 - 31 | 82 |
| SA6985001 | H - 59 | 28 |
| SA6986001 | AA2 - 37 | 82 |
| SA6986101 | P3 - 26 | 50 |
| SA6987001 | P3 - 28 | 50 |
| | AA2 - 39 | 82 |
| SA6988001 | Q2 - 1 | 54 |
| | AA1 - 35 | 78 |
| SA6989001 | Q2 - 2 | 54 |
| | AA1 - 36 | 78 |
| SA6990001 | AA1 - 37 | 78 |
| SA6990101 | Q2 - 3 | 54 |
| SA6991001 | Q2 - 4 | 54 |
| | AA1 - 39 | 78 |
| SA6992001 | Q2 - 5 | 54 |
| | AA1 - 40 | 78 |
| SA6994001 | Q2 - 6 | 54 |
| | AA1 - 41 | 78 |
| SA6996001 | Q2 - 12 | 54 |
| | AA1 - 47 | 78 |
| SA6998001 | AA1 - 52 | 78 |
| SA6998101 | Q2 - 17 | 54 |
| SA6999001 | AA1 - 53 | 78 |
| SA6999101 | Q2 - 18 | 54 |
| SA7001001 | Q2 - 23 | 54 |
| | AA1 - 58 | 78 |
| SA7002001 | AA1 - 60 | 78 |
| SA7002101 | Q2 - 25 | 54 |
| SA7003001 | Q2 - 28 | 54 |
| | AA1 - 63 | 78 |
| SA7005001 | R - 2 | 56 |
| SA7006001 | R - 3 | 56 |
| SA7007001 | R - 5 | 56 |

| CODE | REF.NO | Page |
|---|---|---|
| SA7008001 | R - 7 | 56 |
| SA7011001 | R - 10 | 56 |
| SA7012001 | X - 18 | 72 |
| SA7013001 | X - 20 | 72 |
| SA7014001 | X - 24 | 72 |
| SA7016001 | U1 - 4 | 64 |
| SA7017001 | U1 - 5 | 64 |
| SA7018001 | U1 - 7 | 64 |
| SA7019001 | U1 - 8 | 64 |
| SA7020001 | U1 - 9 | 64 |
| SA7021001 | U1 - 10 | 64 |
| SA7022001 | U1 - 11 | 64 |
| SA7023001 | U1 - 13 | 64 |
| SA7024001 | U1 - 17 | 64 |
| SA7027001 | U1 - 19 | 64 |
| SA7028001 | U1 - 20 | 64 |
| SA7031001 | U2 - 11 | 66 |
| SA7032001 | U2 - 4 | 66 |
| SA7033001 | U2 - 9 | 66 |
| SA7034001 | U2 - 12 | 66 |
| SA7035001 | U2 - 13 | 66 |
| SA7037001 | Z - 41 | 98 |
| SA7038001 | Z - 64 | 100 |
| SA7043001 | F1 - 81 | 18 |
| SA7044001 | A - 38 | 2 |
| SA7046001 | U2 - 29 | 66 |
| SA7047001 | U2 - 30 | 66 |
| SA7050001 | F1 - 85 | 18 |
| SA7053001 | F1 - 97 | 18 |
| | AA4 - 120 | 88 |
| SA7054001 | F1 - 98 | 18 |
| | AA4 - 121 | 88 |
| SA7055001 | F2 - 12 | 20 |
| | AA4 - 3 | 86 |
| SA7056001 | F2 - 13 | 20 |
| | AA4 - 4 | 86 |
| | AA5 - 18 | 92 |
| SA7060001 | F2 - 16 | 20 |
| | AA4 - 73 | 88 |
| SA7061001 | F2 - 17 | 20 |
| | AA4 - 74 | 88 |
| | AA5 - 69 | 94 |
| SA7063001 | L - 60 | 36 |
| | AA4 - 97 | 88 |
| SA7064001 | L - 40 | 34 |
| | AA4 - 103 | 88 |
| SA7065001 | L - 70 | 36 |
| | AA4 - 106 | 88 |
| | Sp | 103 |
| SA7067101 | P2 - 2 | 48 |
| | AA2 - 28 | 82 |
| SA7068001 | P3 - 1 | 50 |
| | AA4 - 109 | 88 |
| SA7069001 | P3 - 2 | 50 |
| | AA4 - 110 | 88 |
| SA7070001 | P3 - 3 | 50 |
| | AA4 - 111 | 88 |
| SA7071001 | P3 - 4 | 50 |
| | AA4 - 112 | 88 |
| SA7072001 | P3 - 5 | 50 |
| | AA4 - 113 | 88 |
| SA7073001 | P3 - 8 | 50 |
| | AA4 - 116 | 88 |

| CODE | REF.NO | Page |
|---|---|---|
| SA7074001 | P3 - 10 | 50 |
| | AA4 - 118 | 88 |
| SA7076001 | Q1 - 21 | 52 |
| | AA4 - 46 | 86 |
| | AA5 - 42 | 92 |
| SA7077001 | Q1 - 40 | 52 |
| | AA4 - 65 | 88 |
| | AA5 - 60 | 92 |
| SA7079001 | F2 - 1 | 20 |
| SA7080001 | F2 - 2 | 20 |
| | AA5 - 3 | 92 |
| SA7082101 | F2 - 4 | 20 |
| SA7083001 | F2 - 5 | 20 |
| | AA5 - 8 | 92 |
| SA7085001 | U2 - 1 | 66 |
| SA7086001 | Sp | 101 |
| SA7087001 | AA1 - 8 | 76 |
| | Sp | 101 |
| SA7088001 | AA1 - 8 | 76 |
| | Sp | 101 |
| SA7089001 | AA1 - 8 | 76 |
| | Sp | 101 |
| SA7090001 | F3 - 14 | 22 |
| | AA1 - 8 | 76 |
| | Sp | 101 |
| SA7091001 | Sp | 101 |
| SA7092001 | AA1 - 5 | 76 |
| | Sp | 101 |
| SA7093001 | AA1 - 5 | 76 |
| | Sp | 101 |
| SA7094001 | AA1 - 5 | 76 |
| | Sp | 101 |
| SA7095001 | F3 - 10 | 22 |
| | AA1 - 5 | 76 |
| | Sp | 101 |
| SA7097001 | AA1 - 7 | 76 |
| | Sp | 102 |
| SA7098001 | AA1 - 7 | 76 |
| | Sp | 102 |
| SA7099001 | AA1 - 7 | 76 |
| | Sp | 102 |
| SA7100001 | F3 - 13 | 22 |
| | AA1 - 7 | 76 |
| | Sp | 102 |
| SA7102001 | AA1 - 4 | 76 |
| | Sp | 102 |
| SA7103001 | AA1 - 4 | 76 |
| | Sp | 102 |
| SA7104001 | AA1 - 4 | 76 |
| | Sp | 102 |
| SA7105001 | F3 - 9 | 22 |
| | AA1 - 4 | 76 |
| | Sp | 102 |
| SA7106001 | AA1 - 10 | 76 |
| | Sp | 102 |
| SA7107001 | Sp | 103 |
| SA7108001 | Sp | 103 |
| SA7109001 | Sp | 103 |
| SA7110001 | Sp | 103 |
| SA7111001 | Sp | 103 |
| SA7119001 | V - 47 | 68 |
| SA7121001 | Y - 2 | 74 |
| SA7122001 | Y - 3 | 74 |

| CODE | REF.NO | Page |
|---|---|---|
| SA7123001 | Y - 5 | 74 |
| SA7124001 | Y - 14 | 74 |
| SA7127001 | Z - 73 | 100 |
| SA7128001 | Z - 74 | 100 |
| SA7129001 | Z - 79 | 100 |
| SA7131001 | F1 - 113 | 18 |
| | AA2 - 2 | 82 |
| SA7134001 | P1 - 10 | 44 |
| SA7149001 | F2 - 7 | 20 |
| | AA5 - 10 | 92 |
| SA7150101 | F2 - 9 | 20 |
| | AA5 - 12 | 92 |
| SA7151101 | F2 - 10 | 20 |
| | AA5 - 13 | 92 |
| SA7152001 | F3 - 58 | 22 |
| SA7159001 | U1 - 14 | 64 |
| SA7175201 | P2 - 14 | 48 |
| SA7176001 | F1 - 3 | 16 |
| | F1 - 10 | 16 |
| SA7178001 | N - 95 | 42 |
| SA7186001 | F3 - 11 | 22 |
| | AA1 - 6 | 76 |
| SA7187001 | F3 - 8 | 22 |
| | AA1 - 3 | 76 |
| SA7204101 | L - 17 | 34 |
| SA7293001 | V - 15 | 68 |
| SA7476001 | X - 1 | 72 |
| SA7480001 | X - 9 | 72 |
| SA7488001 | V - 27 | 68 |
| SA7494001 | P1 - 17 | 44 |
| | P1 - 22 | 44 |
| SA7526001 | Q1 - 1 | 52 |
| | AA4 - 26 | 86 |
| | AA5 - 22 | 92 |
| SA7527001 | F1 - 16 | 16 |
| SA7531001 | B - 47 | 6 |
| SA7534001 | Sp | 102 |
| SA7535001 | Sp | 102 |
| SA7536001 | Sp | 101 |
| SA7537001 | Sp | 101 |
| SA7546001 | L - 90 | 36 |
| | Sp | 103 |
| SA7547101 | L - 46 | 34 |
| SA7550001 | F2 - 38 | 20 |
| | F3 - 32 | 22 |
| | AA1 - 27 | 78 |
| | AA4 - 23 | 86 |
| | AA5 - 87 | 94 |
| SA7551001 | F2 - 56 | 20 |
| | F3 - 56 | 22 |
| | AA1 - 81 | 80 |
| | AA4 - 92 | 88 |
| | AA5 - 106 | 94 |
| SA7555001 | F1 - 101 | 18 |
| | AA4 - 124 | 90 |
| SA7556001 | A - 11 | 2 |
| SA7567001 | Sp | 103 |
| SA7568001 | Sp | 103 |
| | L - 61 | 36 |
| | AA4 - 96 | 88 |
| SA7580001 | U1 - 38 | 64 |
| SA7581001 | U2 - 24 | 66 |
| SA7583001 | U1 - 28 | 64 |

| CODE | REF.NO | Page |
|---|---|---|
| SA7584001 | U1 - 29 | 64 |
| SA7585001 | U1 - 30 | 64 |
| SA7586001 | U1 - 31 | 64 |
| SA7587001 | U1 - 33 | 64 |
| SA7588001 | U1 - 34 | 64 |
| SA7589001 | U1 - 35 | 64 |
| SA7591101 | U2 - 16 | 66 |
| SA7592101 | U2 - 17 | 66 |
| SA7593001 | U2 - 18 | 66 |
| SA7594001 | U2 - 19 | 66 |
| SA7595001 | U1 - 37 | 64 |
| SA7596001 | U2 - 21 | 66 |
| SA7597001 | U2 - 22 | 66 |
| SA7598001 | U2 - 20 | 66 |
| SA7609001 | B - 35 | 6 |
| SA7613001 | L - 63 | 36 |
| | AA2 - 22 | 82 |
| | AA4 - 98 | 88 |
| SA7614001 | L - 64 | 36 |
| | AA2 - 23 | 82 |
| | AA4 - 99 | 88 |
| SA7615001 | L - 67 | 36 |
| | AA2 - 26 | 82 |
| | AA4 - 102 | 88 |
| SA7634101 | L - 86 | 36 |
| SA7726001 | AA3 - 4 | 84 |
| SA7727001 | AA3 - 10 | 84 |
| SA7728001 | AA1 - 3 | 76 |
| SA7748001 | AA1 - 2 | 76 |
| SA7749001 | AA1 - 6 | 76 |
| SA7750001 | AA1 - 1 | 76 |
| SA7751001 | AA1 - 2 | 76 |
| SA7752001 | AA1 - 1 | 76 |
| SA7753001 | AA1 - 3 | 76 |
| SA7754001 | AA1 - 2 | 76 |
| SA7755001 | AA1 - 6 | 76 |
| SA7756001 | AA1 - 1 | 76 |
| SA7757001 | AA1 - 3 | 76 |
| SA7758001 | AA1 - 2 | 76 |
| SA7762001 | AA1 - 6 | 76 |
| SA7764001 | AA1 - 1 | 76 |
| SA7768001 | AA1 - 2 | 76 |
| SA7771001 | AA1 - 1 | 76 |
| SA7773001 | AA2 - 1 | 82 |
| SA7775001 | AA3 - 2 | 84 |
| SA7776001 | AA3 - 8 | 84 |
| SA7777001 | AA3 - 1 | 84 |
| SA7778001 | Q1 - 2 | 52 |
| | Q2 - 13 | 54 |
| | AA1 - 48 | 78 |
| | AA4 - 27 | 86 |
| | AA5 - 23 | 92 |
| SA7779001 | AA3 - 2 | 84 |
| SA7780001 | AA3 - 8 | 84 |
| SA7781001 | AA3 - 1 | 84 |
| SA7782001 | AA4 - 2 | 86 |
| SA7783001 | AA4 - 95 | 88 |
| SA7784001 | AA4 - 1 | 86 |
| SA7793001 | F1 - 115 | 18 |
| SA7794001 | S2 - 12 | 60 |
| SA7795001 | F1 - 114 | 18 |
| SA7802001 | AA5 - 2 | 92 |
| SA7803101 | AA5 - 7 | 92 |
| SA7804001 | AA5 - 1 | 92 |
| SA7805001 | AA5 - 17 | 92 |
| SA7806001 | AA5 - 16 | 92 |
| SA7807001 | AA5 - 68 | 94 |
| SA7808001 | AA5 - 15 | 92 |
| SA7973001 | F1 - 69 | 18 |
| SA7974001 | F1 - 70 | 18 |
| SA7975001 | F1 - 71 | 18 |
| SA7976001 | F1 - 116 | 18 |
| SA7977001 | F1 - 117 | 18 |
| SA7978001 | F1 - 118 | 18 |
| SA8001001 | M - 11 | 38 |
| SA8003001 | U1 - 40 | 64 |
| SA8009001 | N - 98 | 42 |
| SA8011001 | N - 100 | 42 |
| SA8040001 | U1 - 12 | 64 |
| SA8094001 | P2 - 16 | 48 |
| SA8095001 | P2 - 37 | 48 |
| SA8101001 | N - 103 | 42 |
| SA8119001 | U1 - 27 | 64 |
| SA8120101 | U2 - 15 | 66 |
| SA8121001 | G - 3 | 24 |
| SA8279001 | N - 55 | 40 |



# 零件手册
# PARTS BOOK