NISEN 尼森

电剪刀

电子版说明书

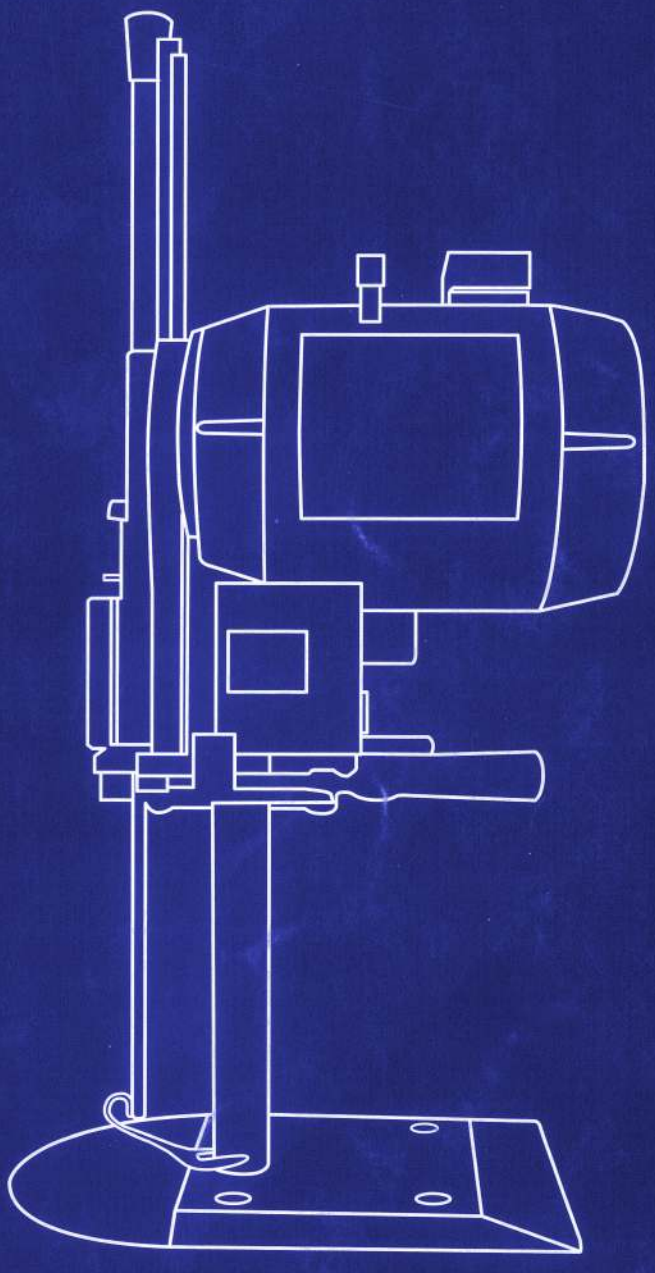

CUTTING MACHINE

使用，和加油和维护

使用前请仔细阅读

使用前

应向油杯内加油；将电机后的旋钮推入转几转，刀片应能上下灵活移动。

——注 意——

当心刀片快口伤人。操作时请使用木手柄推动机器，搬动机器时，请使用提手柄。

维 护

(1) 每星期两次用风管或风箱把马达和磨刀器上的绒头吹掉。(2) 每星期一次取下前盖将丝杆上的绒头弄干净。(3) 每天至少一次取下刀片，用槽子清洗器刀槽清理干净。(4)请勿向底板滚轮加油。(5) 若轮子滚不动，请拆下清洗。

——注 意——

未装刀片时切勿磨刀，以免造成机器损坏。

磨刀时

请放下压脚，用力慢慢地按下磨刀手柄。如果轧死，请抬起拔叉，从新再来几次后，你便会知道怎样的轻重最适合。

Operation, Lubrication and care

Before operaring machine, read this page carefully.

Before operaring the motor, be sure that electric supply voltage and current are the same as stamped on the nameplate. Fill oil cup. Push in turning knob and turn the machine over a few revolutions by hand to see if the knife moves easily.

WARNING	This machine is equipped with a sharp knife. Keep hands away from the knife area at all times. Use control levers and handles only when operating or handling machine.

CARE OF MACHINE

Use air hose or bellows with proper eye shields and blow lint out of motor and sharpener twice a week. Remove cover over cam and clean out lint arround screw mechanism in sharpener once a week, Remove knife and clean slides with slot cleaner at least once a day. To prevent undue accumulation of lint, do not oil plate rollers. If rollers stick. romove from plate and wash in cleaning solvent.

WARNING	Do not operate sharpener without knife in machine or the sharpener will be damaged.

TO SHARPEN THE KNIFE

Take the machine out of the lay. Drop pressure foot by means of pressure foot lever located next to machine operating handle. Press release lever downward with a slow, firm pressure to engage sharpening emchanism. Too fast lever action may cause lever to lock. If this occurs, lift latch lever and start over. After a few tries you will feel correct operating pressure.

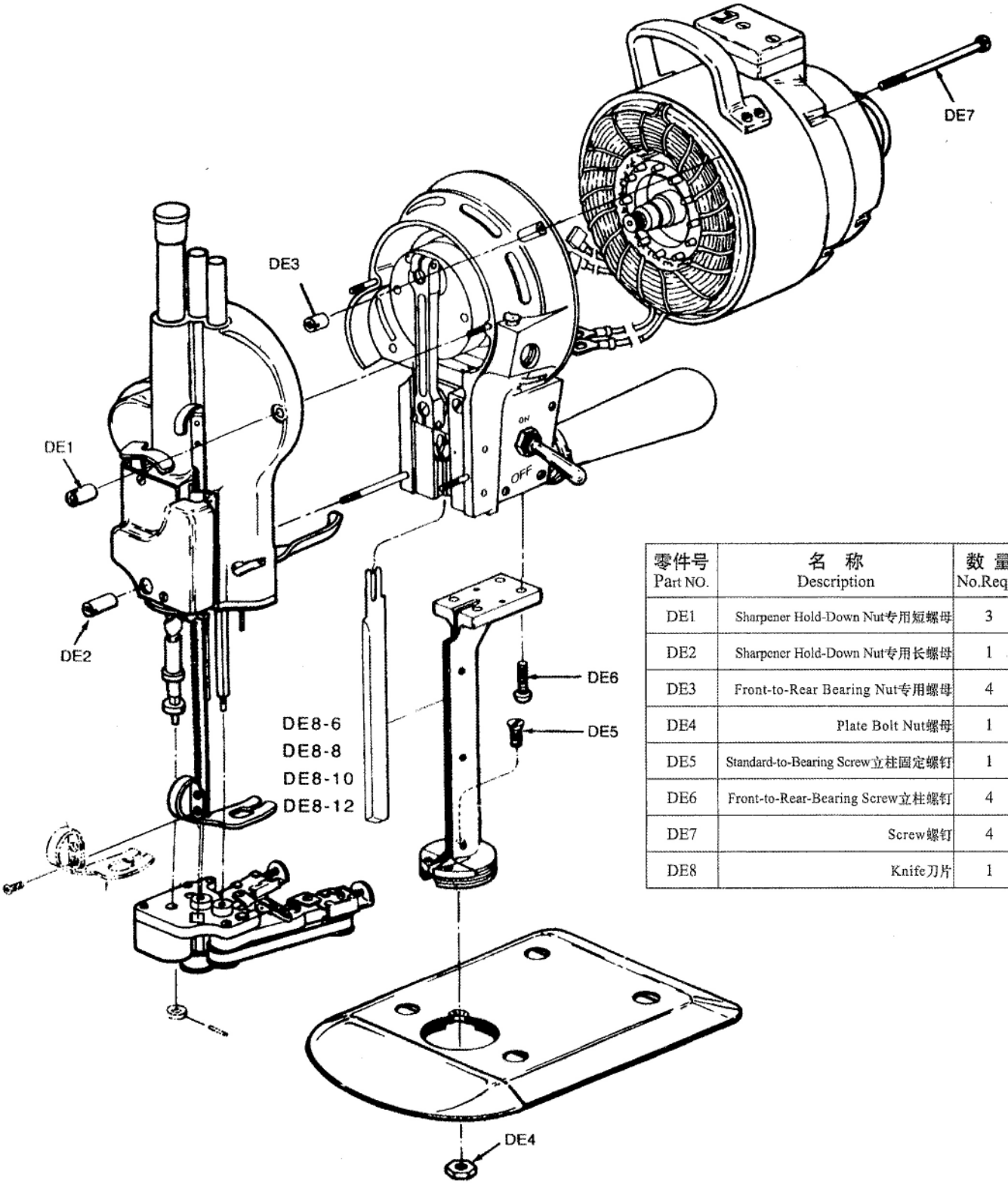

零件号 Part NO.	名 称 Description	数 量 No.Req'd
DE1	Sharpener Hold-Down Nut专用短螺母	3
DE2	Sharpener Hold-Down Nut专用长螺母	1
DE3	Front-to-Rear Bearing Nut专用螺母	4
DE4	Plate Bolt Nut螺母	1
DE5	Standard-to-Bearing Screw立柱固定螺钉	1
DE6	Front-to-Rear-Bearing Screw立柱螺钉	4
DE7	Screw螺钉	4
DE8	Knife刀片	1

单相马达组

Single-Phase Motor Assemblies

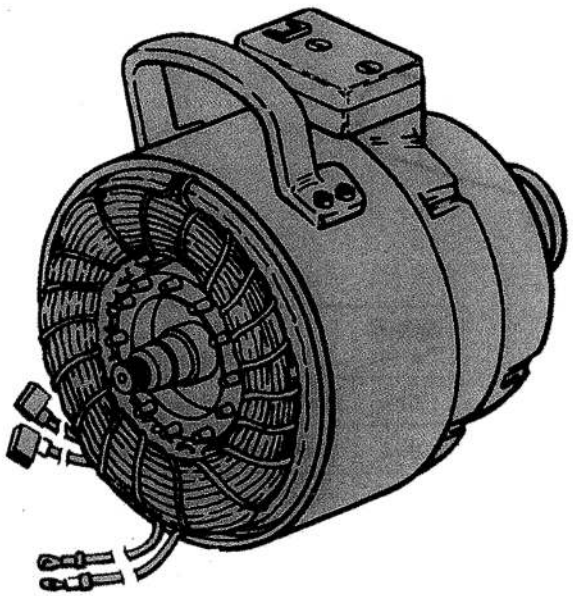

零件号 Part NO.	名 称 Description	数 量 No.Req'd
DE9	Terminal Wire Tubing绝缘器	1
DE10	Stator with Band电机定子组件	1
DE11	Rotor and shaft电机转子组件	1
DE12	Carrying Handle提手柄	1
DE13	Screw提手柄螺钉	4
DE14	Terminal Wire Tubing引线管	1
DE15	Reae Ball Bearing单列向心球轴承	2
DE16	Terminal线耳	2
DE17	Rear Bearing House后机匣	1
DE18	Terminal Block插头组件	1
DE19	Attachment Plug电源插头组件	1
DE20	Screw插头组件螺钉	2
DE21	Cutout switch Mount离心开关罩	1
DE22	Automatic Cutout离心开关切断器	1
DE23	Automatic Cutout Swith离心开关组件	1
DE24	Shaft Cover For Cutout离心开关轴套	1
DE25	Screw离心开关罩螺钉	2
DE26	Screw离心开关盖螺钉	2
DE27	Cover for Cutout离心开关盖	1
DE28	Rotor Fan风轮	1
DE29	Leading sping Washer止动垫圈	1
DE30	Clutch Nut电机转子圈	1
DE31	Retaining Ring轴用弹性挡圈	1
DE32	Fan Cover风轮盖	1
DE33	Screw风轮盖螺钉	2
DE34	Clutch Sping弹簧	1
DE35	Turning Knob旋钮	1

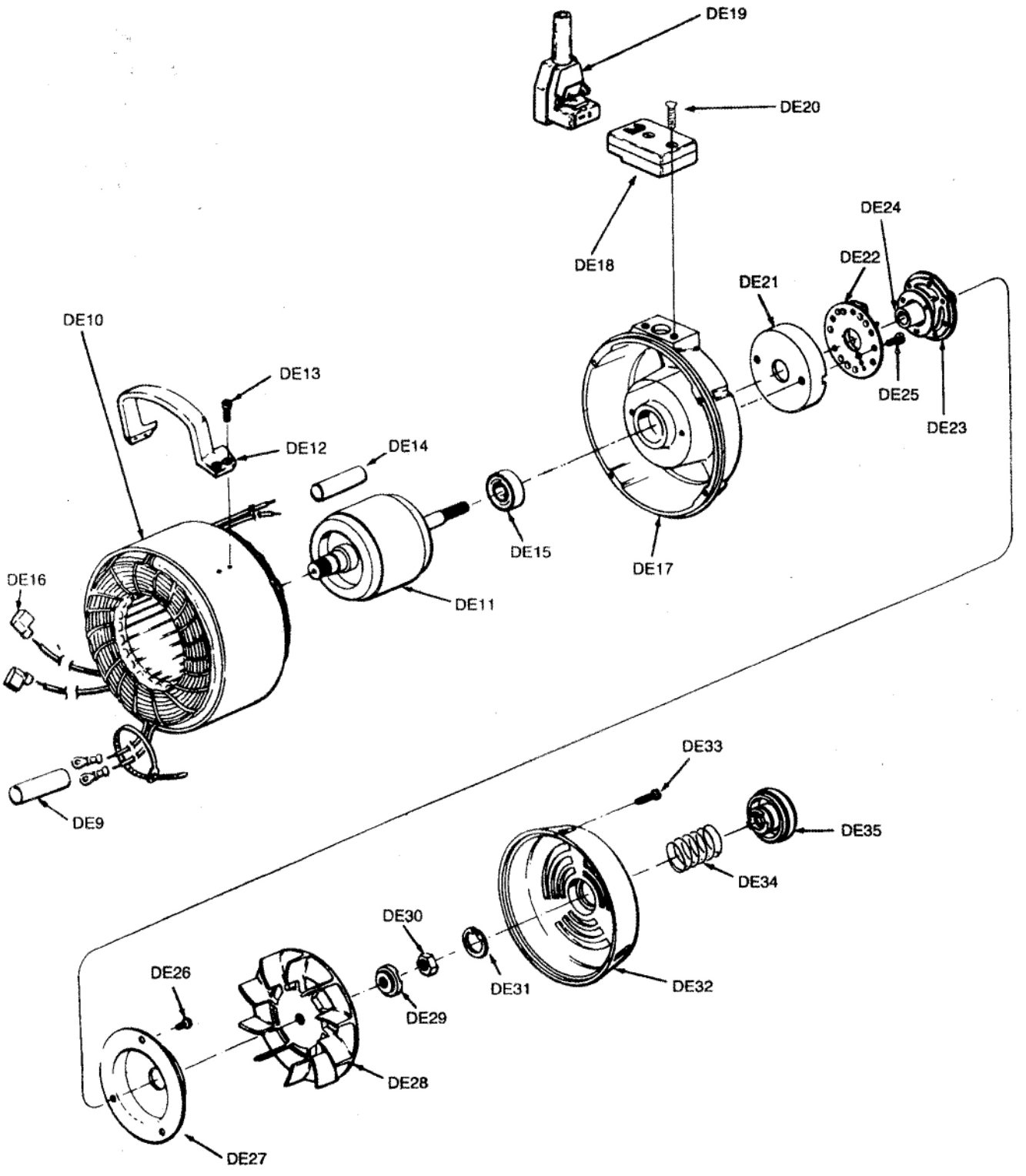
DE19
DE20
DE18
DE24
DE22
DE21
DE25
DE23
DE10
DE13
DE12
DE14
DE15
DE17
DE16
DE11
DE9
DE33
DE35
DE34
DE30
DE31
DE32
DE26
DE29
DE28
DE27

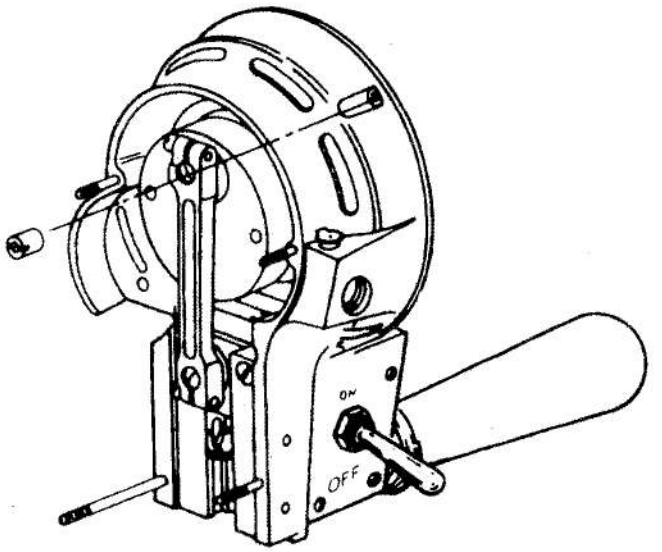

前轴承套组

Front Bearing Housing Assembly

零件号 Part NO.	名 称 Description	数 量 No.Req'd
DE36	Screw电容器螺钉	6
DE37	Screw电容压板螺钉	1
DE38	Capacitor Cover电容器罩	1
DE39	Capacitor启动电容	1
DE40	Cover for Capacitor电容器外套	1
DE41	Spring for Capacitor电容压板	1
DE42	Shaft Lock Nut六角螺母	1

零件号 Part NO.	名 称 Description	数 量 No.Req'd
DE43	Front Bearing Housing前机匣	1
DE44	Bearing单列向心球轴承	1
DE45	Front Ball Bearing Retainer前机匣轴承挡圈	1
DE46	Screw轴承挡圈螺钉	4
DE47	Screw内六角平端紧定螺钉	3
DE48	Washer垫圈	9
DE49	Nut螺母	3
DE50	Crank偏心轮	1
DE51	Stud,upper双头螺栓	2
DE52	Stud,Lower Mounting双头螺栓	1
DE53	Stud,Lower Mounting双头螺栓	1
DE54	Guide Adjustment Nut支撑螺套	3
DE55	Shaft for Ball Bearing传动销	1
DE56	Seated CrankBall Bearing 单列向心球轴承	1
DE57	Lock Nut for Shaft传动销螺母	1
DE58	Crank Ball Bearing Lock Nut轴承挡圈	1
DE59	Connecting Rod连杆	1
DE60	Screw连杆螺钉	2
DE61	H Guide导轨	1
DE62	Cross Head中心滑轮	1
DE63	Wrist Pin从动销	1
DE64	Wrist Pin Felt Pad油绳	1
DE65	Connecting Rod Washer垫片	1
DE66	Screw半端紧定螺钉	1
DE67	Guide Washer垫片	1
DE68	Screw圆柱头内六角螺钉	6
DE69	Knife Lock Washer固定刀垫片	1
DE70	Screw方头螺钉	1
DE71	Screw圆柱头内六角螺钉	2
DE72	Handle Bracket力板	1
DE73	Screw内六角螺钉	1
DE74	Screw for Handle Bracket力板螺钉	1
DE75	Operating Handle Lock Nut木手柄锁紧螺母	1
DE76	Operating handle木手柄	1
DE77	Switch电机开关	1
DE78	Switch Base开关盖	1
DE79	Screw开关盖螺钉	3
DE80	Oiling device油杯组件	1
DE81	Oil Tube油杯座	1
DE82	Eyelet空心铆钉	1
DE83	Cover for Oil Tube油杯盖盖板	1
DE84	Long Wicking油绳	3
DE85	Screw油杯座盖板螺钉	4
DE86	Screw油杯座螺钉	2
DE87	Circle密封圈	2
DE88	Windows for oil油窗	1
DE89	Oil tube cover油杯座盖	1
DE90	Oil Hole Cover油杯	1

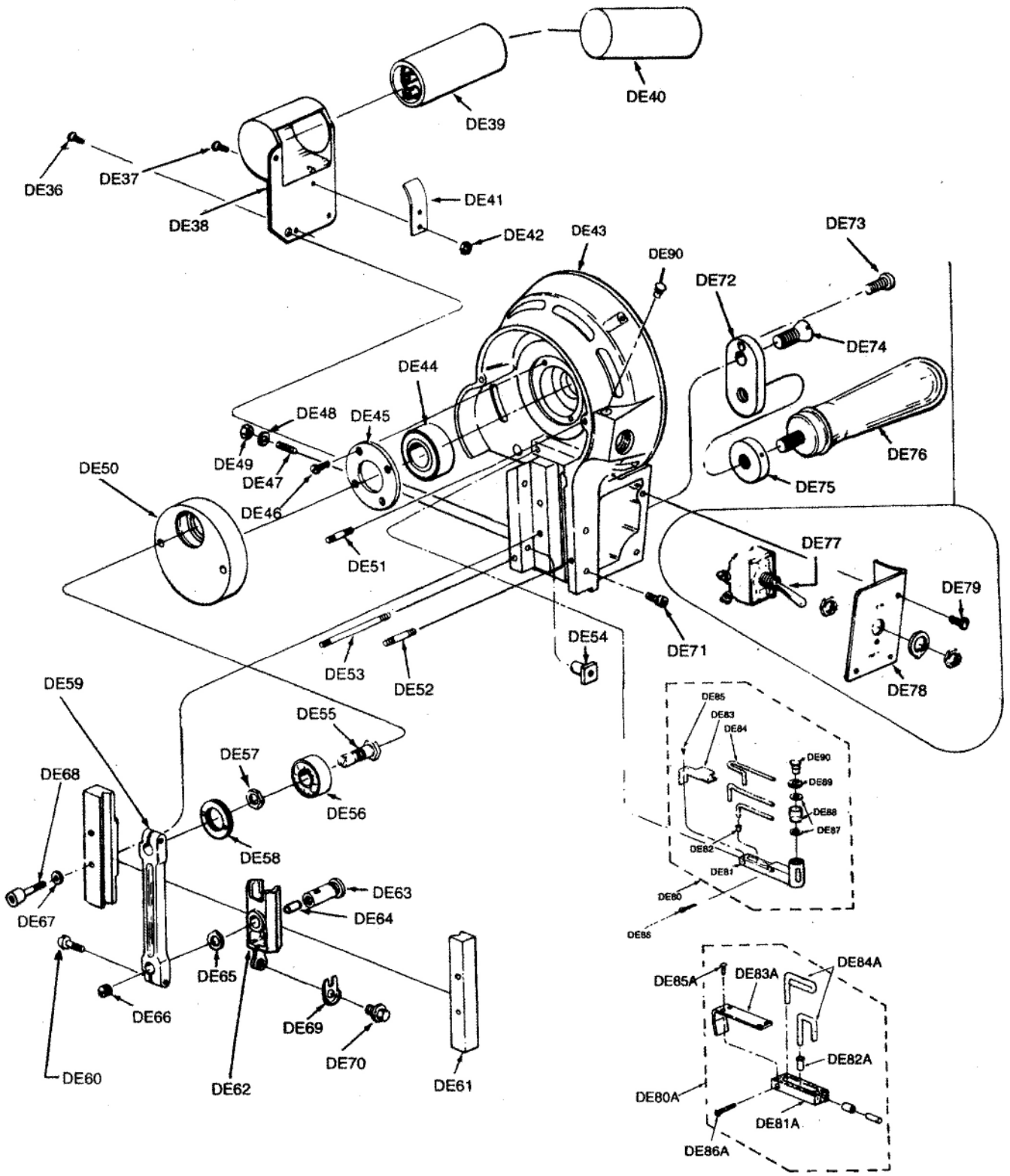
DE40
DE39
DE36
DE37
DE38
DE41
DE42
DE43
DE90
DE73
DE72
DE74
DE44
DE48
DE45
DE49
DE47
DE46
DE50
DE51
DE76
DE75
DE77
DE79
DE78
DE71
DE54
DE53
DE52
DE59
DE55
DE57
DE56
DE68
DE58
DE63
DE64
DE67
DE65
DE66
DE69
DE70
DE60
DE62
DE61
DE85
DE83
DE84
DE90
DE89
DE88
DE87
DE82
DE81
DE80
DE86
DE85A
DE83A
DE84A
DE82A
DE80A
DE81A
DE86A

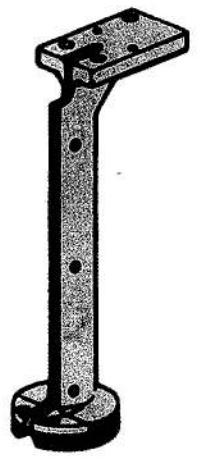

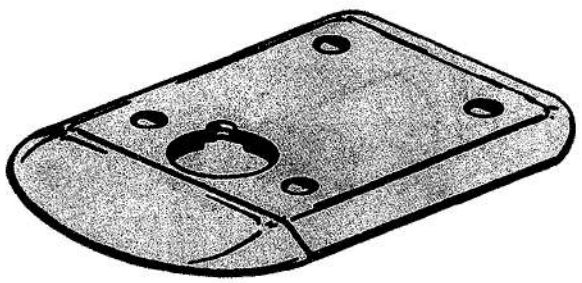

零件号 Part NO.	名 称 Description	数 量 No.Req'd
DE91	Standard立柱	1
DE92	Knife Slide刀壳组件	1
DE93	Throat Plates脚板	2
DE94	Taper pin脚板定位销	2
DE95	Screw脚板螺钉	2
DE96	Screw刀壳螺钉	3
DE97	PlateWing导板	1
DE98	Plate底板	1
DE99	Runner Roller all set滚轮组件	4
DE100	Roller Shell滚轮衬套组件	4
DE101	Rubber Mounted Roller橡胶安装座组件	4
DE102	Clamp Screw for Roller底板压轴螺钉	12
DE103	Hinge Pin导板连接轴	2
DE104	Plate Wing Spring导板弹簧	2
DE105	Lock Washer.#8止动垫片	2

刀夹底盘组

Standard and Beseplate Assembly

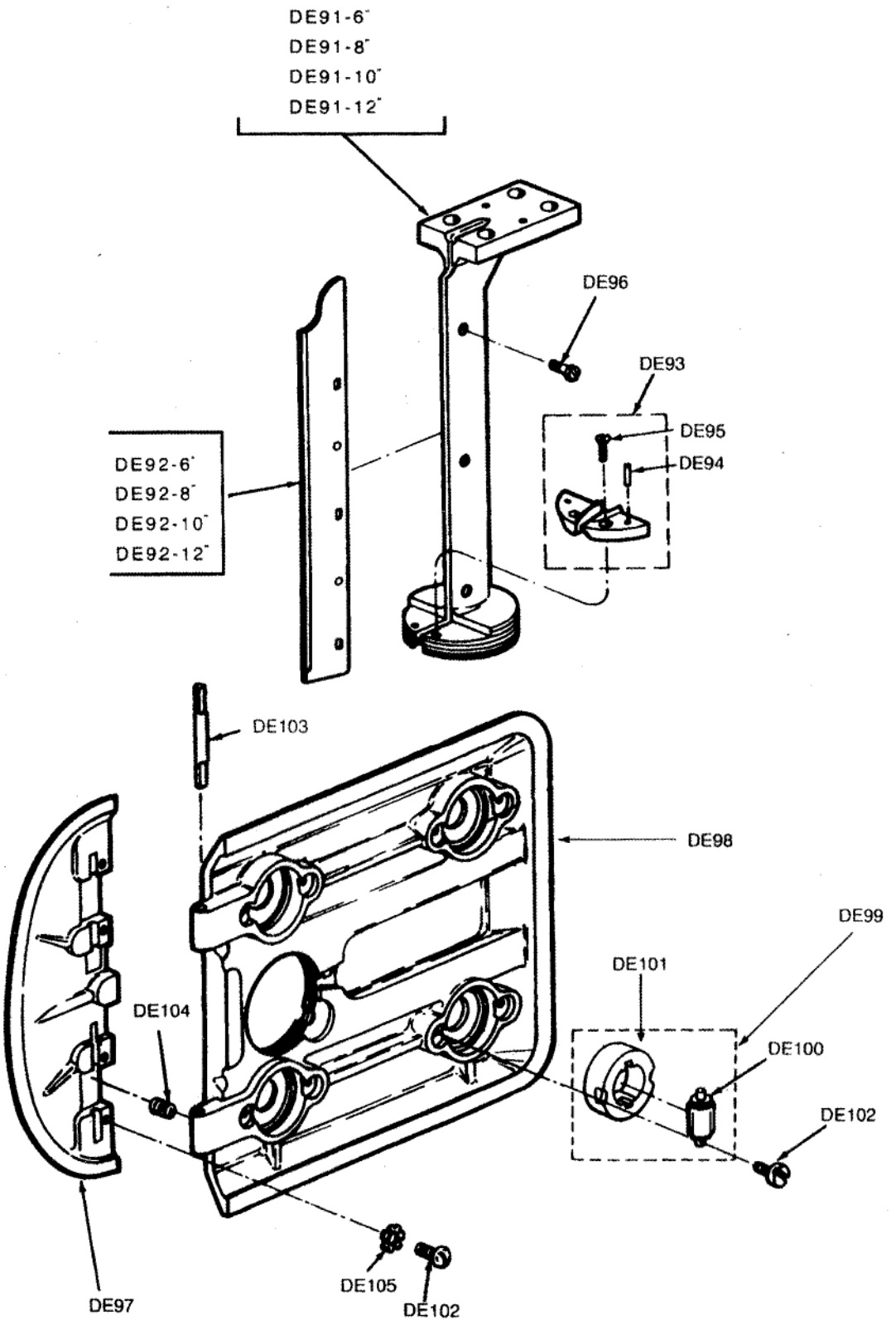
DE91-6"
DE91-8"
DE91-10"
DE91-12"
DE96
DE93
DE95
DE94
DE92-6"
DE92-8"
DE92-10"
DE92-12"
DE103
DE98
DE99
DE101
DE104
DE100
DE102
DE97
DE105
DE102

磨刀器组

背面 *FRONT*

Front Sharpener Housing Assembly

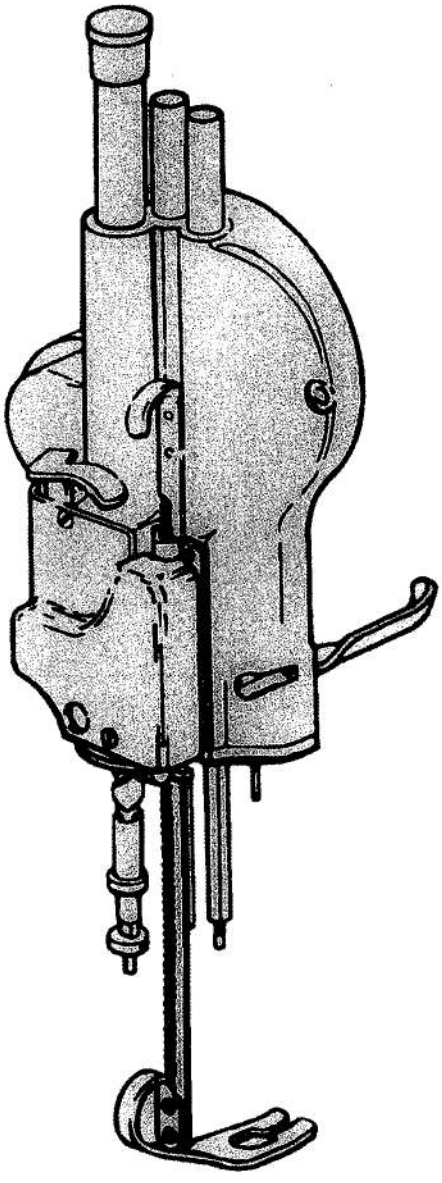

零件号 Part NO.	名 称 Description	数 量 No.Req'd
DE106	Cap of Tube塑料帽	1
DE107	Stop Nut for Screw Shaft锁紧螺母	1
DE108	Nut for Screw Shaft丝杆上螺母	1
DE109	Thrust washer for Nuts轴承片	3
DE110	Thrust Ball Bearing轴承组件	3
DE111	L.H.Nut for screw Shaft左向螺母	1
DE112	R.H.Nut for screw Shaft右向螺母	1
DE113	Screw Shaft双向丝杆	1
DE114	Collar for Fxtensiom双向丝杆挡圈	1
DE115	Release Lever with Cam磨刀手柄组件	1
DE116	Sharpener Housing With Bushings and Tubes磨刀机匣组件	1
DE117	Spring washer for Release Lecer弹性垫圈	1
DE118	Release Lever With Cam磨刀手柄	1
DE119	Cam偏心块	1
DE120	Screw磨刀手柄铆钉	1
DE121	Set Screw for Cam圆柱端紧定螺母	1
DE122	Screw for Releasse Lever磨刀手柄活动螺钉	1
DE123	Latch for Cam拨叉	1
DE124	Spring for Latch拨叉弹簧	1
DE125	Screw for Latch拨叉定位螺钉	1
DE126	Bearing for Cam Shaft发条销上轴衬	1
DE127	Bearing for Cam Shaft发条销下轴衬	1
DE128	Shaft for Cam发条销	1
DE129	Cam Spring锁紧发条	1
DE130	Cam Shaft Spring Screw发条销限位螺钉	1
DE131	Pressure Foot Lever压脚放松手柄	1
DE132	Spring for Pressure Foot Lever放松手柄弹簧	1
DE133	Pressure Foot Lever Screw放松手柄螺钉	1
DE134	Spacer for Knife Guard Lock Bracket扩齿托架垫片	1
DE135	Knife Guard Lock Bracket Complete压脚托架	1
DE136	Lock for Pressure Foot压脚定位板	1
DE137	Spring for Knife Guard Lock护齿弹簧	1
DE138	Nut for pressure Foot Lock锁紧螺母	1
DE139	Knife Guard Lock Bracket Only支持桩子	1
DE140	Screw for Knife Guard Lock护齿螺钉	1
DE141	Screw压脚托架螺钉	4
DE142	Pressure Foot Lock Bracket Complete压脚托架组件	1
DE143	Cover Over Cam前罩	1
DE144	Screw前罩下螺钉	1
DE145	Screw前罩上螺钉	1
DE146	Screw for Pressure Foot Shoe压脚螺钉	2
DE147	Pressure Foot shoe压脚	1
DE148	Screw压脚杆提手柄螺钉	2
DE149	Lift Handle for Knife Guard Rad压脚杆提手柄	1
DE150	Knife Guard Rod压脚杆	1

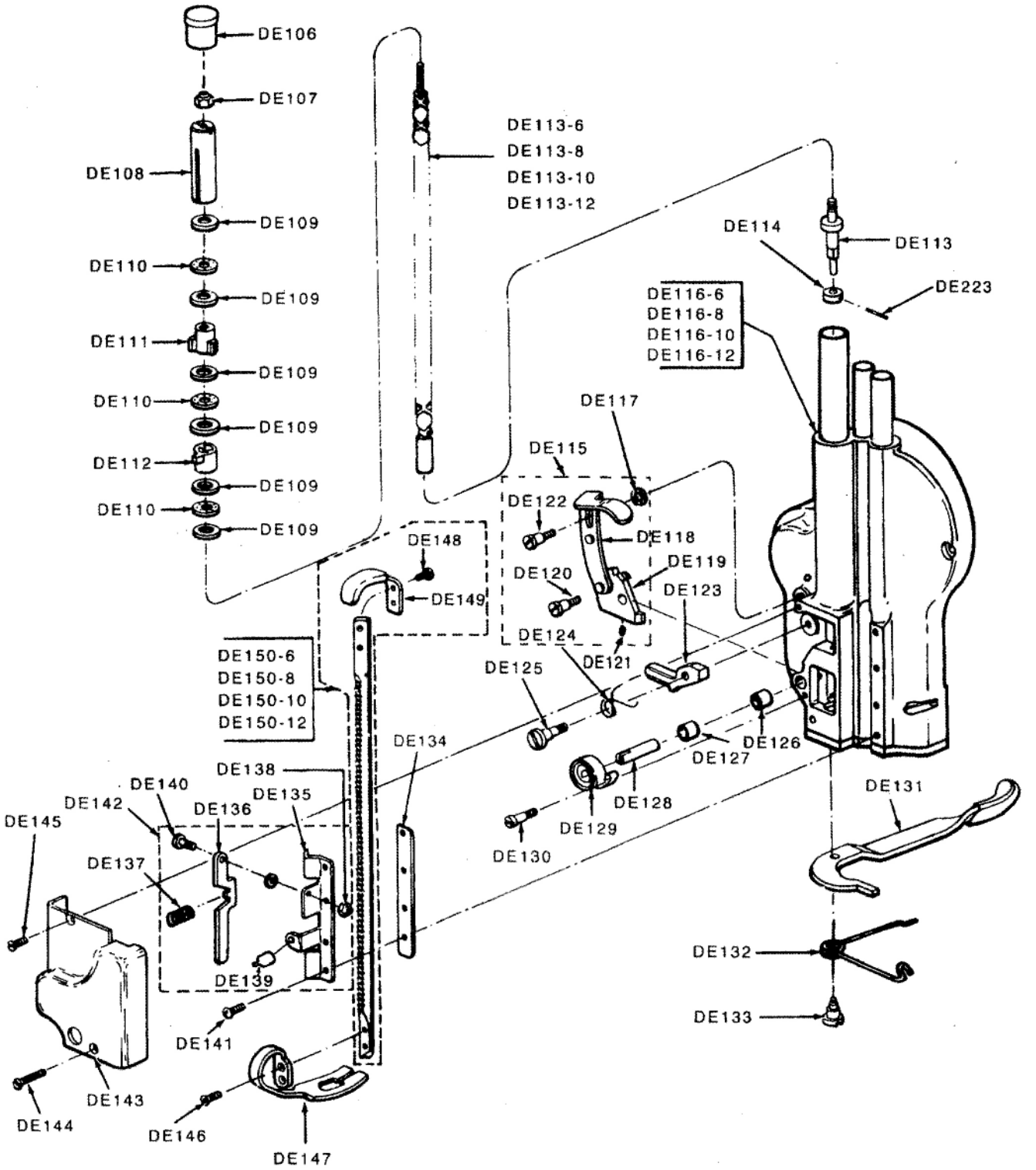
DE106
DE107
DE108
DE109
DE110
DE109
DE111
DE109
DE110
DE109
DE112
DE109
DE110
DE109
DE113-6
DE113-8
DE113-10
DE113-12
DE114
DE113
DE223
DE116-6
DE116-8
DE116-10
DE116-12
DE117
DE115
DE122
DE118
DE119
DE120
DE123
DE124
DE121
DE148
DE149
DE150-6
DE150-8
DE150-10
DE150-12
DE125
DE126
DE127
DE128
DE129
DE130
DE134
DE138
DE140
DE142
DE135
DE136
DE145
DE137
DE139
DE141
DE143
DE144
DE146
DE147
DE131
DE132
DE133

磨刀器组

背面 *BACK*

Front Sharpener Housing Assembly

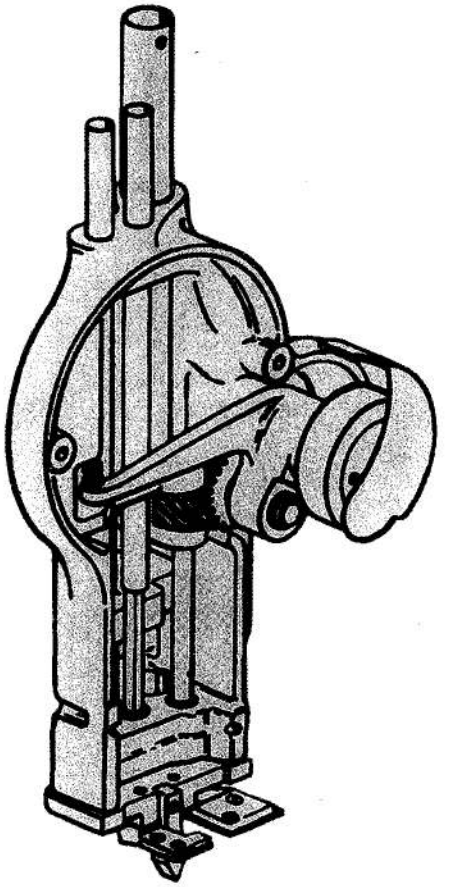

零件号 Part NO.	名 称 Description	数 量 No.Req'd
DE151	R.H.Follower Nut随动螺母	1
DE152	L.H.Follower Nut随动左螺母	1
DE153	Square Shaft方导杆	2
DE154	Tube for Square Shaft方导杆管套	2
DE155	Tube for Square Shaft丝杆管套	1
DE156	Sharpener Housing磨刀机匣	1
DE157	Felt Pad for Oil Retainer-Idler Gear从动斜齿轮油盖毛毡	1
DE158	Oil Retainer-Idler Gear从动斜轮油盖	1
DE159	Screw斜齿轮油盖螺钉	2

零件号 Part NO.	名 称 Description	数 量 No.Req'd
DE160	Shaft for Grank斜齿轮芯轴	1
DE161	Idler Gear斜齿轮	1
DE162	Gear and Shaft斜齿轮轴	1
DE163	Bell Grank斜齿轮传动机匣	1
DE164	Ball Bearing for Grank单列向心球轴承	2
DE165	Spacer for Bell Bearings斜齿轮轴衬圈	1
DE166	Retaining Ring for Bell Crank孔用弹性挡圈	1
DE167	Drive Pulley with Driver摩擦轮组件	1
DE168	Bearing for Bell Grank斜齿轮芯轴衬套	1
DE169	Washer for Shaft垫片	1
DE170	Betaining Ring for Shaft轴用弹性挡圈	1
DE171	Pin for Bell Grank顶针	1
DE172	Rearing for Drive Shaft斜轮传动杆上轴衬	1
DE173	Thrust washer 15 牙斜齿轮垫圈	2
DE174	Spiral Gear牙斜齿轮	1
DE175	Bearing for Drive Shaft齿轮传动杆中轴衬	1
DE176	Bearing for Drive Shaft齿轮传动杆下轴衬	1
DE177	Key键	1
DE178	Drive Shaft with Gear齿轮传动杆	1
DE179	Lock Nut for Shaft六角螺母	1
DE180	Pin for Sharpener Housing推杆档桩	1
DE181	Spring for Bell Grank支撑弹簧	1
DE182	Bearing for Gears 20 牙齿轮衬轴	2
DE183	Spur Gear 20 牙齿轮	2
DE184	Thrust Washer for Bottom Plate底板座垫圈	2
DE185	Push Rod推杆	1
DE186	Roll for Push Rod推杆定位销	1
DE187	Bearing for Screw Shaft丝杆轴套	1
DE188	Bottom Plate磨刀机匣底板	1
DE189	Oil Pad and Holder油垫座	1
DE190	Spreader Pin分隔块	1
DE191	Screw分隔块螺钉	1
DE192	Screw磨刀机匣底板螺钉	3
DE193	Screw油垫座螺钉	2
DE194	Rivet空心铜铆钉	4
DE195	H.Oil Pad油垫座左右垫毡	1

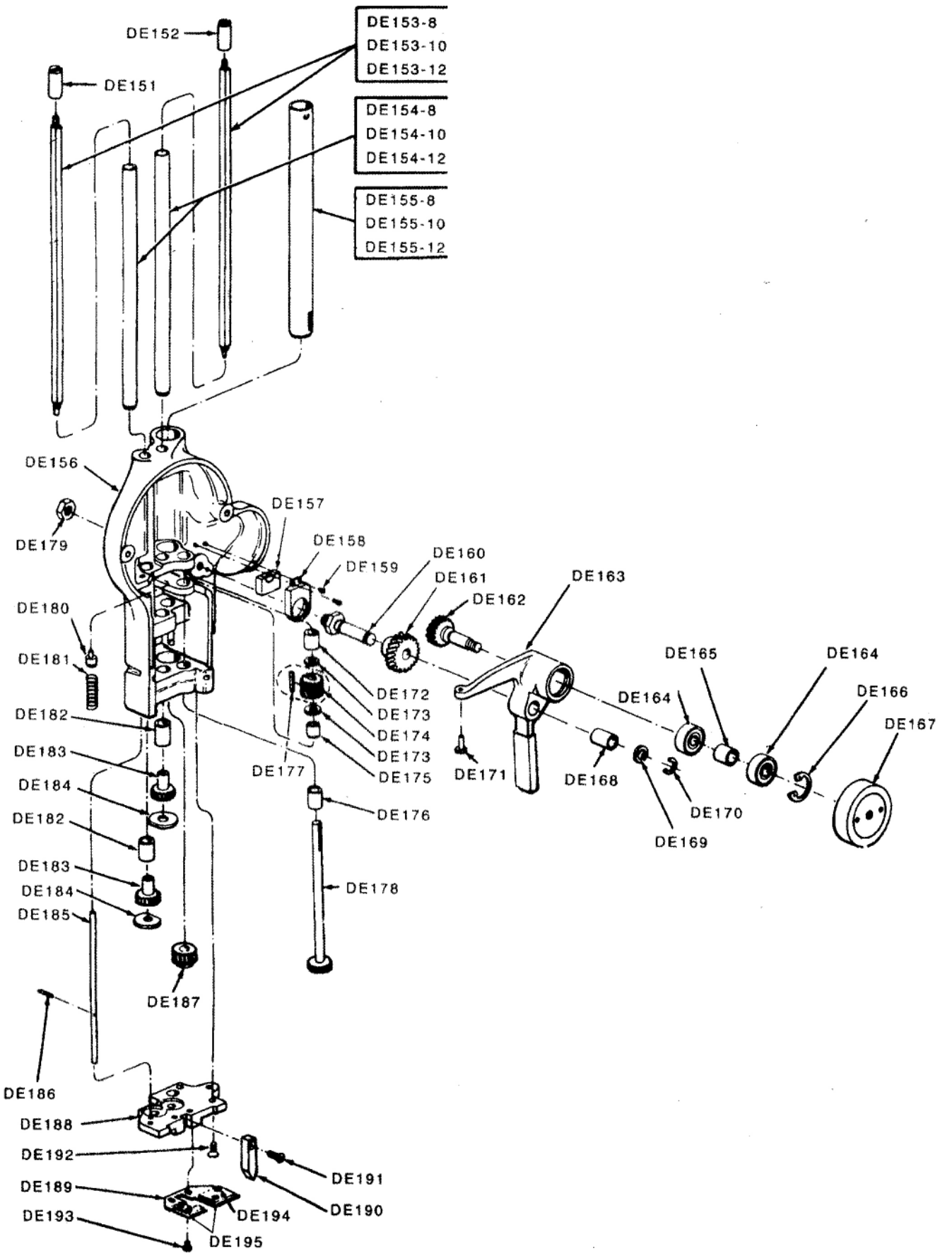
DE152
DE153-8
DE153-10
DE153-12
DE151
DE154-8
DE154-10
DE154-12
DE155-8
DE155-10
DE155-12
DE156
DE157
DE179
DE158
DE159
DE160
DE161
DE162
DE163
DE180
DE181
DE165
DE164
DE164
DE166
DE167
DE172
DE173
DE174
DE173
DE175
DE182
DE183
DE177
DE171
DE168
DE170
DE169
DE184
DE176
DE182
DE183
DE184
DE178
DE185
DE187
DE186
DE188
DE192
DE191
DE189
DE190
DE194
DE193
DE195

下齿轮托架组
Lower Gear Bracket Assembly

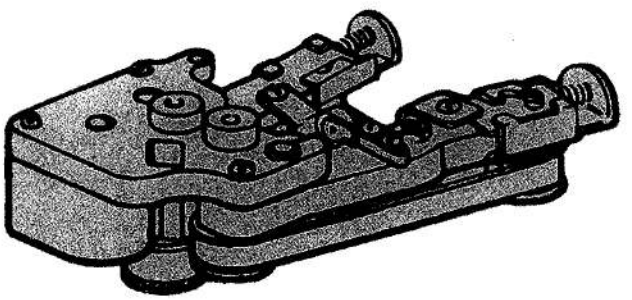

零件号 Part NO.	名 称 Description	数 量 No.Req'd
DE196	L.H.Shaft Extension 8牙齿轮轴	1
DE197	R H.Shaft Extension滑轮轴	1
DE198	Adjusting Screw磨刀架盖板螺钉	1
DE199	Screw半圆头螺钉	1
DE200	Screw半圆头螺钉	3
DE201	Gear Cover磨刀架盖板	1
DE202	Screw挡片螺钉	2
DE203	Guide Back of Shandard挡片	1
DE204	Spring for Arm夹紧臂弹簧	1
DE205	Clamping Arm for Shoe夹紧臂	1
DE206	Screw for Clamping Arm夹紧臂螺钉	1
DE207	Screw紧定滚轮螺钉	4
DE208	Srabilizer紧定滚轮组件	2
DE209	Nut for Sharpener Shoe Screw六角螺母	2
DE210	Screw.#4-36×3/16Fillister Head圆柱头螺钉	2
DE211	Intermediate Gear双联齿轮	1
DE212	Lower Gear Bracker with Cover磨刀架	1
DE213	Wear Plate耐磨板	2
DE214	Sping for Pulleyslide滑动小轮弹簧	2
DE215	R.H.Slide with Pulley左滑动小轮组件	1
DE216	Slide with Pulley右滑动小轮组件	1
DE217	Gear on Screw Shaft 24牙齿轮	1
DE218	Grease Plug平端紧定螺钉	1
DE219	Bearing for Screw Shaft双向丝杆衬套	1
DE220	Bearing for Intermediate Gear双联齿轮衬套	1
DE221	Bearing for Shaft Extension传动小轮衬套	2
DE222	Front Pullry tor Belt传动小轮	.1
DE223	Roll Pin弹性圆柱销	2
DE224	Neoprene Band for Pulley传动小轮橡胶套	2
DE225	R.H.Pre-set Sharpener Shoe(Only)右磨刀垫	1
DE226	L.H.Pre-set Sharpener Shoe(Only)左磨刀垫	1
DE227	Washer磨刀垫螺钉垫片	4
DE228	R.H.Pre-set Sharpener Shoe右磨刀垫组件	1
DE229	L.H.Pre-set Sharpener Shoe左磨刀垫组件	1
DE230	Bushing for sharpener Shoe磨刀垫螺钉衬套	2
DE231	R.H.Sharpener Shoe Spring右弹簧	1
DE232	L.H.Sharpener Shoe Spring左弹簧	1
DE233	Screw for Sharpener shoe磨刀垫螺钉	2
DE234	Shon Screw内六角锥端紧定螺钉	1
DE235	Jam Nut小六角较扁母	1
DE236	Belt砂带	2

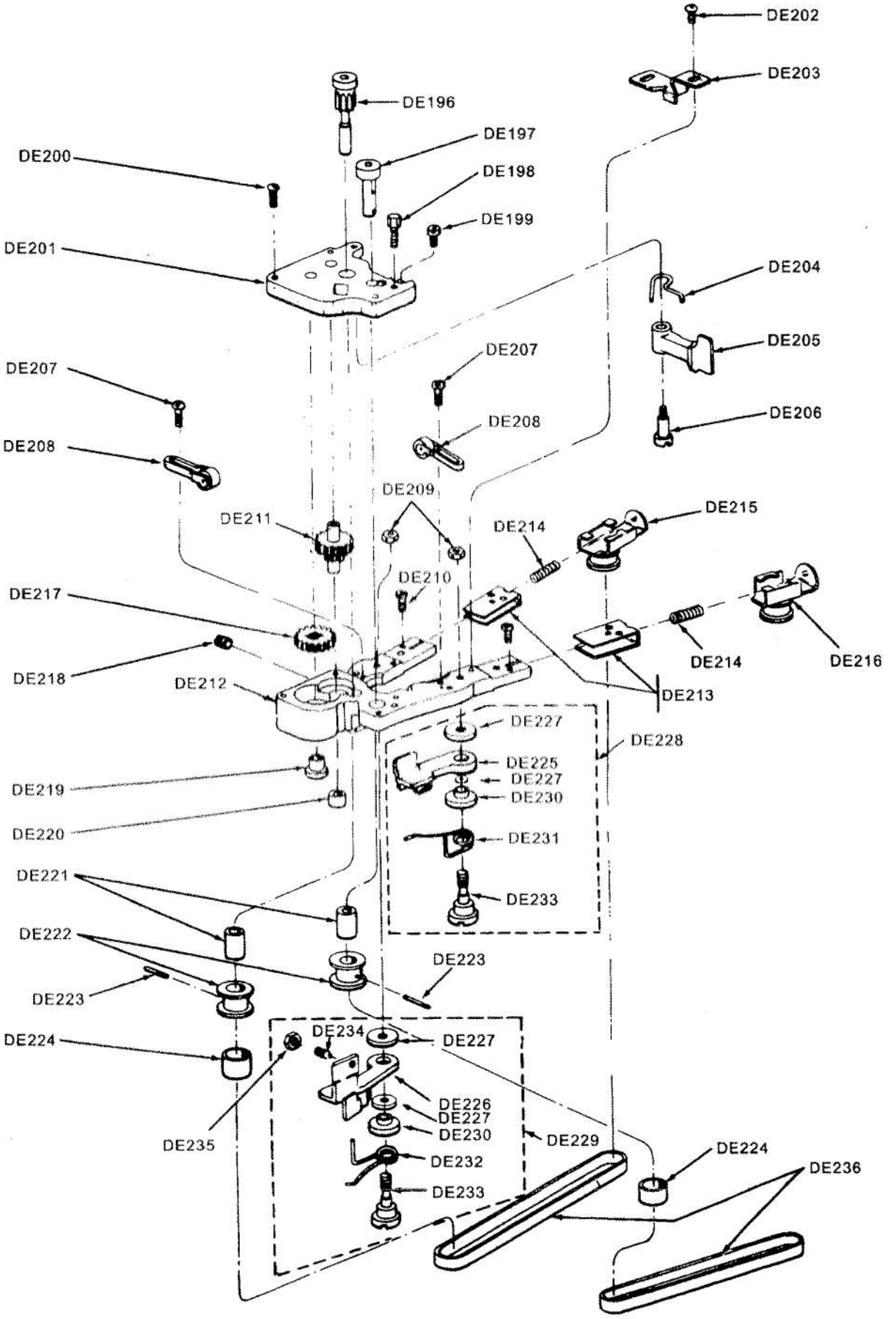
DE202
DE203
DE196
DE197
DE200
DE198
DE199
DE201
DE204
DE205
DE207
DE207
DE206
DE208
DE208
DE209
DE211
DE215
DE214
DE210
DE217
DE214
DE216
DE218
DE213
DE212
DE227
DE228
DE225
DE227
DE219
DE230
DE220
DE231
DE221
DE233
DE222
DE223
DE223
DE224
DE234
DE227
DE226
DE227
DE235
DE230
DE229
DE232
DE224
DE233
DE236

附 件
Accessories

编 号 Part NO.	名 称 Description	数 量 No.Req'd
DE238	Slot Cleaner 槽子清洗器	1
DE239	Square Sleeve 四角套筒	1
DE240	Attachment & Wire Plug 电源线插头组件	1
DE236	Belt 砂带	10

（随机附件的品类和数量，最终解释权归公司所有）

12”、10”、8”、6” 不同尺寸零件表
Different Size Parts List

图 号 Part NO.	名 称 Description	尺寸规格 Size			
		12”	10”	8”	6”
DE150	Knife Guard Rod 压脚杆	414	364	314	314
DE154	Tube for Square Shaft 方导杆管套	295	246	195	195
DE155	Tube for Screw Shaft 丝杆管套	294	244	194	194
DE153	Square Shaft 方导杆	347	294	247	247
DE113	Screw Shaft 双向丝杆	419	369	319	269
DE92	Knife Slide 刀壳组件	319	269	219	169
DE8	Knife 刀片	344	294	244	194
DE91	Standard 立柱	324	274	224	174

接下来您将看到的是伺服说明书

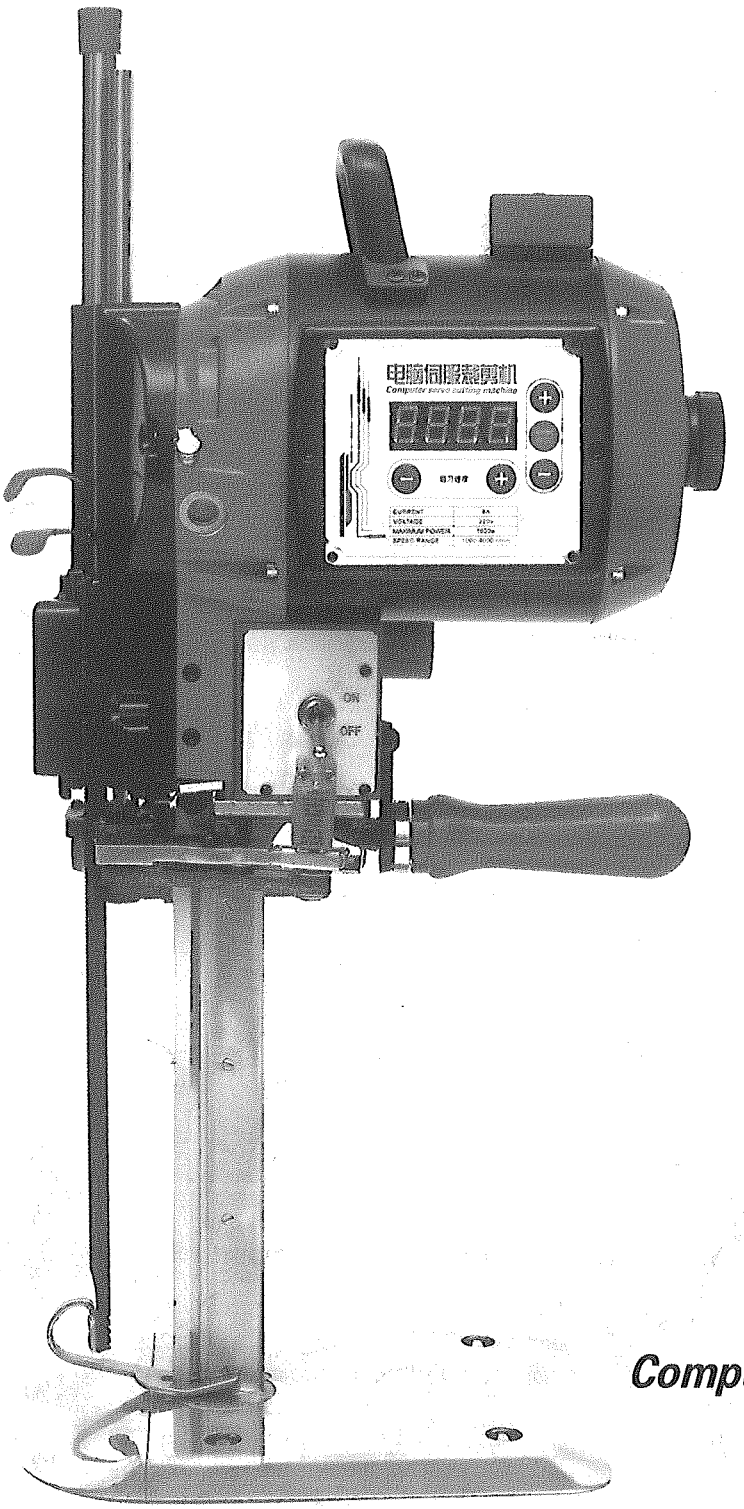

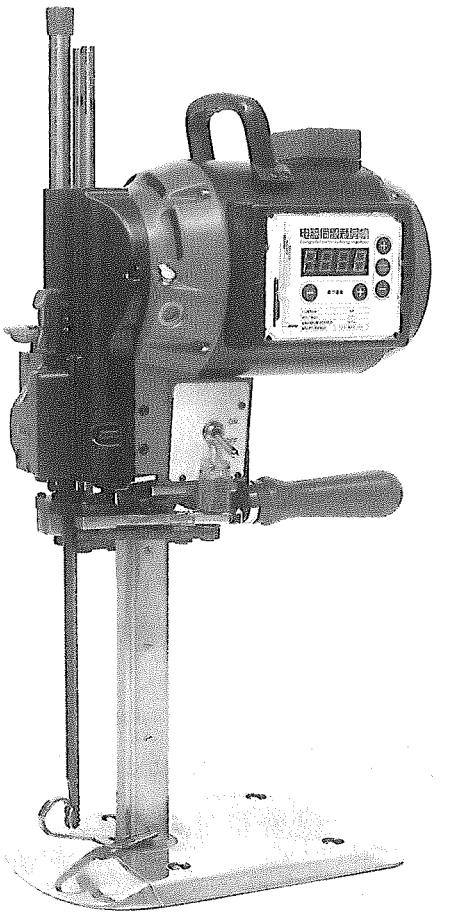

使用手册

User s manual

电脑伺服裁剪机

Computer servo cutting machine

目　录 CONTENTS

产品简介 Product introduction 1

安全说明 Safety instructions 2

使用须知 Operation instructions 3

使用步骤 Notice before operation 4

控制面板操作说明 Operational specification of control panel 6

磨刀器的使用说明 Operating explanation for sharpener 11

换刀片 Blade replacement 11

磨刀器的调整 Sharpener adjustment 12

换砂带 Abrasive belt replacement 14

机器的故障分析及维修方法 Malfunction analysis and maintaining method 14

随机附件 Attached accessories 17

零件图解说明 Illustrated part instruction 20

不同尺寸裁剪机零件表 List of parts with Different Sizes 20

结构示意图 Structural representation 21

伺服电机组 Servo electric motor modul 22

伺服电机总装示意图 General assembly diagram for servo electric motor modul 23

前端盖组件 Front bearing housing assembly 24

前端盖组件总装示意图 General assembly diagram for front bearing housing assembly 25

刀夹底盘组 Standard and beseplate assembly 26

刀夹底盘组总装示意图 General assembly diagram for standard and beseplate assembly 27

磨刀器组（前面）Front sharpener housing assembly(front) 28

磨刀器组（前面）总装示意图 General assembly diagram for front sharpener housing assembly(front) 29

磨刀器组（背面）Front sharpener housing assembly(back) 30

磨刀器组（背面）总装示意图 General assembly diagram for front sharpener housing assembly(back) 31

下齿轮托架组 Lower gear bracket assembly 32

下齿轮托架组总装示意图 General assembly diagram for lower gear bracket assembly 33

产品简介

尊敬的客户，非常感谢您选用本产品，在您使用本产品之前，请您详细阅读本手册。

本机是第二代自动磨刀裁剪机基础上研制出的新一代电脑伺服裁剪机，采用了国内领先的专用伺服电机及控制系统，该机器具有设计超前，外形轻巧美观，功能齐全，性能稳定、可靠等优点，同时该机控制系统的芯片采用了最新一代抗干扰强的16位伺服电机专用芯片，并且关键元器件全部选用美国、日本等世界名牌，性能稳定可靠。本机的重要机械部位全部选用高精度、超耐磨的优质零配件，具有30多年先进的自动磨刀加工工艺和进口的四轴加工中心保证了本机壳体的加工精度。电脑伺服裁剪机功率、转速可调节，满足了各种不同面料的裁剪需求，是现代缝制设备行业最理想的裁剪工具，让您尽享裁剪乐趣。本机的一些主要性能描述如下：

1、电脑控制，操作界面简单。具有人性化人机对话界面，适用于棉、毛麻、丝稠、化纤、地板革、塑料毯、雨绒、麻袋布、胶布、牛仔布、弹力棉、皮革、地毯、伞布等轻薄及厚料织物的裁剪。

2、智能自控和数字转速功率可调装置，本机转速实现了1500~4000之间无级调速,功率1~4档对应的500~1600瓦可调,功率在负载状态下具有自动补偿功能,满足了您不同的裁剪要求。

3、保护功能。内有过载、欠压、过压等多重保护功能，安全可靠，能自动检测机器使用工作中的转速、功率、电压、负载、输出短路、编码错误、开机关机、编码器检测及磨刀传感器现状。

4、在设定转速、功率工作时,磨刀转速始终保持2800r/min，磨刀停止后转速和功率将自动恢复至原有设定状态。

5、本产品用途广泛，具有功率大、节能、效率高、无级调速、重量轻、温度低、操作敏捷、实用美观等特征。

产品技术参数：

电压：AC/DC220V　　电流：2.5~7.5A　　功率：500W~1600W（1-4档）　　转速：1500~4000r/min

磨刀转速：2800r/min　　裁剪高度：160/210/260/310/360mm　　机器净重：16.2Kg

PRODUCT INTRODUCTION

Respected customers, thank you for choosing our product.Please read this manual carefully before using the product.

This new generation of computer servo cutting machine is developed based on the second generation of automatic grinding cutting machine, which adopts the leading man-made special servo motor and control system and has the advantages of advanced design, light and goodly shape, and complete function, stable and reliable performance.Mean while,this machine adopts the chip specially using fora new generation of 16-bit servo motor with strong anti interference,as the clip of control system, and all key elements are of American and Japanese brands, with stable and reliable performance. The important mechanical parts adopt the high quality parts and as semblies with high precision and wear resistant. The process precision of the machine case can be ensured for more than 30 years of advanced automatic grinding process and imported four-axis processing center. The computer servo cutting machine is an ideal cutting machine in the modern tailoring equipment industry, of which the power and rotate speed of the can be adjusted, so as to ensure the cutting requirement of different outside materials, thus, you can enjoy in tailoring.The main per formance of the machine is as follows:

1. It is computer-controlled and the operating interface is simple. It has a man-machine conversation interface, and is suitable for cutting the light-thin and thick textile fabrics, as cotton, wool,linen blended fabric, silk, chemical fiber, floor leather, plastic carpet, rain cashmere, sackcloth, rubber cloth,jean, elastic cotton, leather, carpet and umbrella cloth.

2. It is an intelligent auto-controlled machine with controllable digital rotate speed power. The machine can realize 1500~4000 stepless speed regulation, and the power can be adjusted from 500-1600 corresponding to 1-4 shifts.The power has auto compensation function in the load condition, so as to meet different cutting requirements.

3. It has the protective functions of overload, under-voltage and overvoltage protection, which is safe and reliable, and can test the rotate speed, power, voltage, load, output short circuit, coding error, start and stop, coder and the state of grinding sensor during the operation.

4. The grinding rotate speed should be kept at 2800r/min, during the setting of rotate speed and power operation. The rotate speed and power will be recovered to the setting state after grinding.

5. This product can be wildly applied, and has the advantages of large power,energy conservation, high efficiency, stepless adjustment, light weight, lower temperature and fast operation and is practical and beautiful.

TECHNICAL PARAMETERS:

Voltage: AC/DC220V　　Current: 2.5-7.5A　　Power: 500 W- 1600W (1-4 shifts)　　Rotate speed: 1500~4000r/min

Grinding speed: 2800r/min　　Cutting height: 160/210/260/310/360/mm　　Machine net weight: 16.2 Kg

安全说明

本手册中，我们对安全说明采用“警告，注意，提示”方式进行说明。

1、警告

它表示了在操作中可能出现的危险，要求高度重视，如果不按照要求来操作，容易发生事故。

2、注意

它是机器的操作和维护所要注意的，如果不按照要求来操作，将会损坏机器。

3、提示

它表示了一些辅助的说明。

使用安全须知

1、机器装有锋利的刀片，使用时要十分小心，随时注意手、头发，做好安全防范措施。机器不用时必须将压脚杆放下，刀片上装上塑料护罩。

2、进行日常保养维护时，必须切断电源，同时注意油量。

3、使用机器前，要求熟悉阅读本手册，根据安全要求进行操作。

4、操作时，根据需要做好配备必要时的安全防范工具。

5、机器必须连接在有牢固的接地外置电源,以防漏电触电事故,机器不得随意拆卸，必要时由专业人员进行操作。

6、该机器设计不得与其它设备连接使用。

7、安全标志必须要保持干净、清晰，需要更换请与附近的供应商或本公司联系。

SAFETY INSTRUCTIONS

In this manual, we adopt “Warning, Notice and Note"for safety instructions.

1. Warning

It refers to dangers possibly occurred in the operation, which should be highly regarded according to the requirements, or otherwise, the accident may be caused easily.

2. Notice

It refers to notices for machine operation and maintenance according to the requirements, or otherwise, the machine can be damaged.

3. Note

It refers to other auxiliary instructions.

OPERATING SAFETY NOTICE

1. Be careful when using, for the machine is equipped with sharp blade, and pay attention to the safety countermeasures for hands and hair. When not in use, the foot bar must be put down, and the blade must be covered with plastic protective case.
2. Power must be cut off and the oil mass should be considered for routine maintenance.
3. Read the manual before operation and operate according to the safety requirements.
4. Necessary safety protective tools must be prepared as required in the operation.
5. The machine must be connected with the firmly-grounded outlay power supply, so as to avoid current leakage and electric shock. The machine cannot be disassembled at will,and when necessary, it shall be operated by professional workers.
6. The machine should not be connected with other equipment.
7. Safety marks must be clean and clear. Please contact with the supplier nearby or our company if any marks need to be changed.

电脑伺服裁剪机使用须知
OPERATION INSTRUCTIONS FOR COMPUTER SERVO CUTTING MACHINE

电脑伺服裁剪机—开始使用

1. 打开纸箱
2.把裁剪机放在裁床上
3.打开附件纸盒
4.把刀盒、四角套筒、电缆线、油壶、滑脂、清扫器及六角专用扳手放在裁床上

COMPUTER SERVO CUTTING MACHINE - START TO USE

After you buy the computer servo cutting machine,you should:

1. Open the carton;
2. Put the cutting machine on the cutting bed;
3. Open the carton for accessories;
4. Put the knife box, tetragonal sleeve, cable conductor, oil pot, grease, sweeper and special hexagonal spanner on the cutting bed.

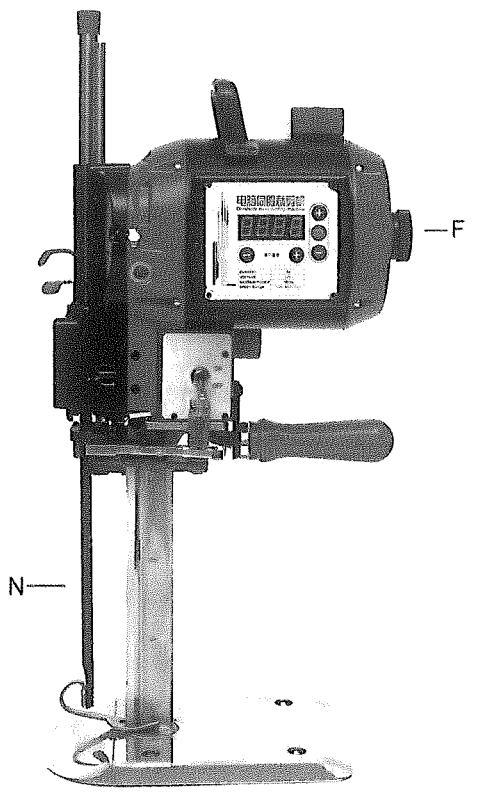

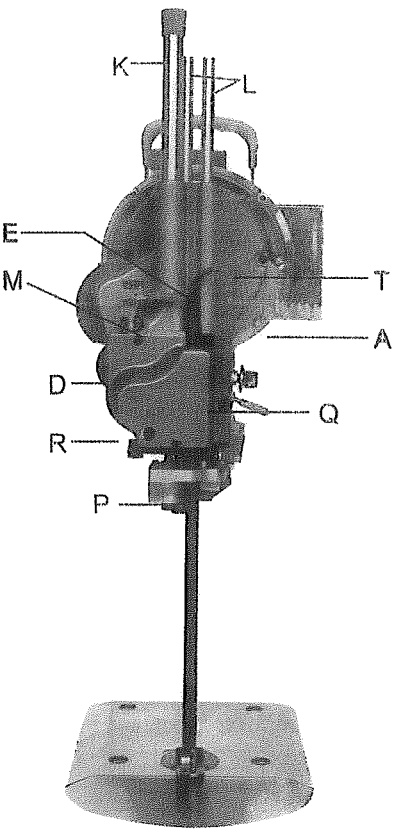

	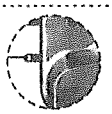				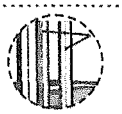	
A、油杯 Oil cup	D、拔叉 Fork	E、磨刀手柄 Handle	F、旋钮 Knob	K、丝杆管套 Screw rod sleeve	L、方导管套 Square guide sleeve	M、磨刀手柄活动螺钉 Free screw of handle
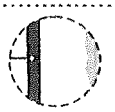		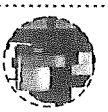	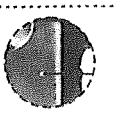			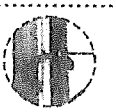
N、压脚杆 Foot bar	O、滑动小轮 Sliding truckle	P、平端紧定螺钉 Flat-ended set screw	Q、前罩 Front shroud	R、压脚放松手柄 Release handle of the pressure foot	S、滑动小轮架 Sliding truckle carrier	T、压脚杆提手柄 Foot bar lifting handle

使用电脑伺服裁剪机，请按下述步骤：

1.检查电流与电压是否与产品标注相同。使用不符合的电流将损坏产品。将插头接上电源，请确保所使用的电线符合当地电流及电压。

2.每天把30#机油倒满油杯“A”。

3.每星期一次将滑脂渗入“K”丝杆管套、“L”方导管套，每班一次润滑油滴入产品上有红色漆标注的部位及磨刀手柄活动螺钉“M”处。

4.拧下齿轮托架组的平端紧定螺钉“P”，插入油脂管，挤进约0.5CM直径油脂。每月一次将使磨刀更畅顺。

5.确保磨刀器组处于锁紧位置。旋转旋钮“F”并试转数圈，刀片应可顺畅上下移动。若刀片不顺畅，磨刀器可能未处于锁紧的位置。

6.若要锁紧磨刀器，请将拔叉“D”向上提，然后按下磨刀手柄“E”后放开磨刀器。用手将磨刀下齿轮托架组推至最上位锁紧，再松开拔叉“D”及磨刀手柄“E”重复这步骤以确保磨刀器已经锁紧。

7.察看刀片顶端是否与锁刀方头螺钉紧接，且刀片是否垂直于底座之上。

如果需要调整刀片：

- 产品必须未接电源
- 磨刀器组需处于锁紧位置
- 按下压脚放松手柄“R”，将压脚杆提手柄“T”往上提，使压脚处于最高位置
- 把产品放在裁床上
- 旋转旋钮“F”将刀片转至底端
- 用四角套筒扳手旋松方头螺钉
- 刀片必须紧贴锁刀方头螺钉，在旋紧锁刀方头螺钉时，必须把刀背紧按到刀壳的槽底
- 拧紧锁刀方头螺钉，确定刀片正确位置后，再转动旋钮“F”，刀片上下滑动应顺畅

8.检查开关面板中的电机开关是否处于“OFF”的位置，然后将插头插到插座。

Operate The Computer Servo Cutting Machine According To The Following Steps:

1. Check whether the current and voltage meet the product labels or not. The unqualified current may damage the product. Interlock the plug with power supply, and make sure all electrical wires are suitable for local current and voltage.

2.Fulfill the oil cup "A" with 30# engine oil everyday.

3.Filter grease into"K" Screw rod sleeve and "L" square guide sleeve once week, and drop the grease on the red painted marks and "M" free screw of handle once per shift.

4. Screw off the flat-ended set screw "P" on the gear bracket unit, and insert the grease pipe for pushing into about 0.5cm diameters of grease, once a month, so that the grinding knife will be more sharp and smooth.

5. Make ensure that the sharpener unit is in the locking position. Rotate knob"F" for several circles of test run,and the blade should be move up and down smoothly, and if not, it indicates that the sharpener is not locked.

6. Please lift the fork "D" to lock the sharpener, and then press down the handle "E" and release the sharpener. Push the lower gear bracket unit to the top location for locking, and then release fork "D" and handle "E". Repeat the above steps to make sure that the sharpener has been locked.

7. Check whether the top end of blade is closely connected with the screw with square head for blade locking, and whether the blade is vertical to the bottom base.

If the blade needs to be adjusted:

- The product must be power off.
- Sharpener unit should be locked.
- Press down the presser foot and release handle "R", lift the feet bar lifting handle "T" to make the presser foot locate on the top.
- Put the product on the cutting bed.
- Rotate the knob "F" to turn the blade to the bottom end.
- Use tetragonal sleeve spanner to unscrew the screw with square head.
- The blade must cling to the screw with square head for blade locking, and the back of knife must be pressed to the slot base of the knife case during rotating the screw with square head.
- Screw down the screw with square head for blade locking, and locate the blade correctly, and then rotate "F",at this time,the blade should slide smoothly.

8. Check whether the motor switch in the switching panel is on the "OFF" position or not, and then insert the plug.

9.紧握木手柄开动电机开关“ON”，让刀片运转。若刀片不规则运转，磨刀器组应处于未锁紧位置。
因此请关闭电机开关“OFF”，然后调较如下：

●把左手四指和拇指叉开，拿住磨刀器前部

●按下斜齿轮传动机匣外露橡套柄，让磨刀器与伺服电机马达分离

●用右手开启电机开关后放松左手，磨刀器便自然回到锁紧位置

10.产品长期不使用前先开马达数次；这使滑润油加温而流到各部分。忽略此步骤可能导致产品故障。

维护您的产品

切记日常保养维护，调整及修理前必须切断电源。为确保您的产品正常使用，请定期检查维护。
若长期使用，保养维护工作应更频密：

▲每天一次

将刀片卸下，以清扫器清理刀壳槽内杂积和脚板底部毛绒，为避免绒头堵塞底座滚轮，请不要替滚轮上油。
如果滚轮不太灵活，应拆下滚轮组件将之清洁。

▲每星期二次

拆下风轮盖和前罩用气枪或简易的吹风机将伺服电机和磨刀器上的绒头清除。使用气枪或吹风机时戴上眼罩，以免造成眼脸受伤。

▲经常检查机器各紧固部位，不允许有松动现象。

若上述的保养维护工作持之以恒，必定能将电脑伺服裁剪机功能发挥得淋漓尽致，使您用起来更称心满意。

9. Hold the handle firmly to turn on the motor switch "ON", to operate the blade. If the blade cannot operate regularly, it indicates that the sharpener unit is not well locked.
Thus, the motor switch "OFF" must be cut off for the following adjustment:

●Separate your thumb with other four fingers, and hold the front of the sharpener.

●Press down the exposed rubber sleeve handle of the lower helical drive gear box, to separate the sharpener and servo motor.

●Use your right hand to start the motor and release your left hand, at this time, the sharpener can return back to the locking position freely.

10. Motors should be driven for several times for long- term operation, for the purpose of heating the lubricating oil and flowing to all parts. Product faults may be caused due to negligence of the step.

TAKE CARE OF YOUR PRODUCT.

Be sure to keep in mind the routine maintenances.Power must be cut off for adjustment and maintenance. In order to ensure the normal operation of your products, please check and maintain it regularly. For long-term operation, the repair and maintenance should be done frequently;

▲ Once per day

Disassemble the blade, to clean away the impurities in the slot of blade case and the nap on the bottom of baseboard with a sweeper, so as to avoid the sealing of base roller. Do not apply oil on the roller. If the roller is not flexible, it should be cleaned by disassembling the roller unit.

▲ Twice a week

Dismount the wind wheel cover and front shroud, and use the air gun or simple blower to clean the knops on the servo motor and the sharpener. Put on the eye-mask when using the air gun or the blower, so as to protect your face and eyes from being damaged.

▲ Check all fastening parts of the machine regularly, and any loosening is not allowed.

If you preserve in doing the above said maintenance, you can make full use of computer servo cutting machine,and you will will feel well-content

一、控制面板操作说明 OPERATIONAL SPECIFICATION OF CONTROL PANEL

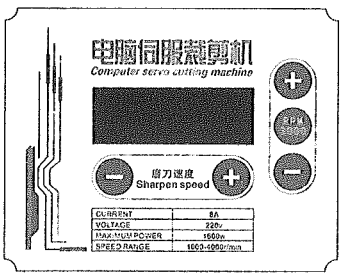

（一）电机转速检测

Motor speed test

接通外电源，显示屏出现闪烁的 2800 待机状态;

Connect to the external power, and there is flickering 2800 on the display screen, and the unit is in the waiting status;

启动电机开关“ON” ON OFF ,显示屏上出现的数值为电机实际转速；

Start the motor switch "ON" ON OFF , and the number appears on the display screen is the actual speed of the motor;



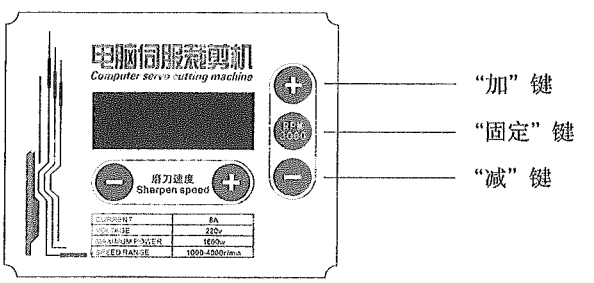

二、磨刀器的使用说明: Operating Explanation for Sharpener

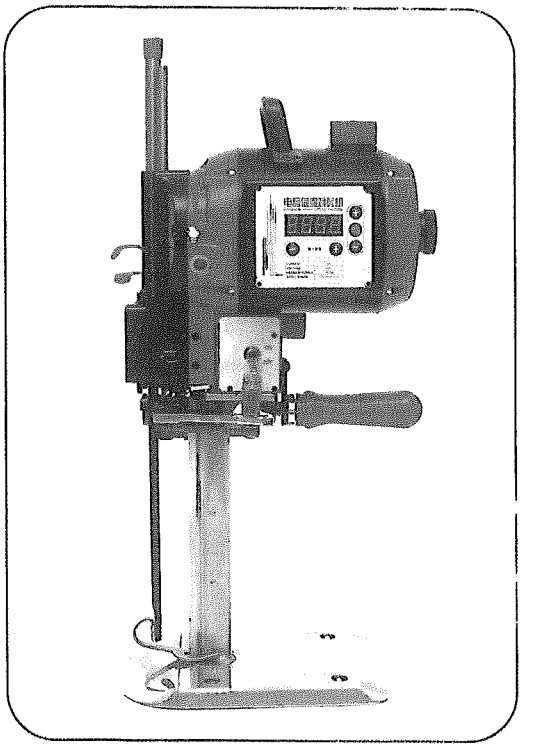

1、将机器离开裁料；
2、用手按动压脚放松手柄，将压脚与底板面接触；
3、用力慢慢按下磨刀手柄后松开，磨刀架向下移动再向上返回，同时驱动砂带旋转，对刀片进行磨削，一般经过磨削2-3次，刀片即可锋利。

1. Put the machine away from the cutting materials.
2. Press the release handle of the pressure foot by hand, and connect the pressure foot with soleplate.
3. Slowly press the release lever and then loosen it. The sharpener bracket returns upwards after moving downwards, and drives abrasive belt to circumrotate for sharpening the blade simultaneously. Generally, the blade will be sharp after 2-3 times of sharpening.

⚠ 注意事项 NOTICE

1、机器在裁剪时，切勿磨刀；
2、磨刀器正在磨刀时，切勿关闭电机开关；
3、机器未装刀片时，切勿磨刀以免造成机器的损坏；
4、按下磨刀手柄时，手要离开，否则磨刀架会停在某一高度位置，使刀片磨削不均；
5、按磨刀手柄时，切勿太快，以免引起磨刀手柄自锁，出现卡死现象。

1. Don't operate sharpener while cutting.
2. Don't shut off motor while sharpener is in motion.
3. Don't sharpen when no blade is installed for preventing the machine from being damaged.
4. Put your hands away when pressing the handle, or the sharpener will stop at a certain height, resulting in uneven sharpening of the blade.
5. Don't handle so fast for preventing it from auto-locking which will lead to dead lock.

三、换刀片: BLADE REPLACEMENT

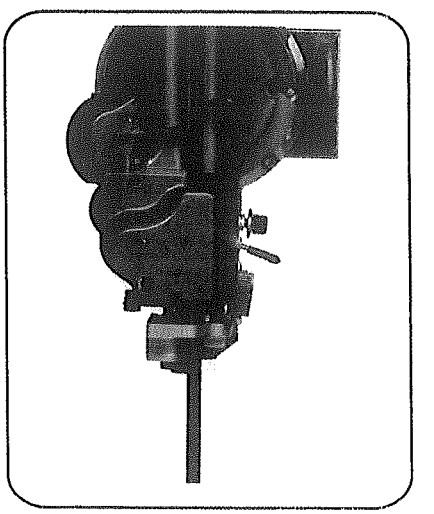

1、调整磨刀器处于自锁位置，保证偏心轮与摩擦轮分离状态。
2、用手转动旋钮“F”，使刀片处于最 低位置，抬起压脚到最上端，用四角套筒专用扳手松开刀片紧固方头螺钉,从立柱底部取出刀片。
3、用清扫器清除存积在立柱刀壳槽中绒尘。

1. Adjust sharpener to the locked position, and guarantee the friction wheel and eccentricity wheel are in the separate state.
2. Turn hand wheel "F" by hand to settle blade in the lowest position, and uplift pressure foot to the topping position, then loosen blade riveting square head screw with special spanner for four-foot sleeve, so as to take out blade from the bottom of the pillar.
3. Clean the dust in the knife slot of the pillar by dust catcher.

⚠ 注意事项 NOTICE

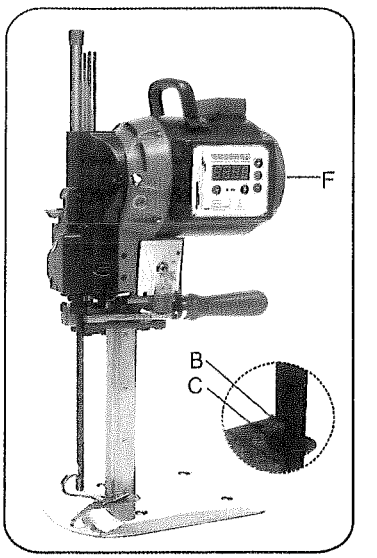

1、更换刀片前，必须切断电源，旋转旋钮“F”使刀片处于最下端。

2、刀片装入后，应使刀锋转角点“B”处于脚板平面“C”3-5mm。
转动旋钮“F”，确保刀片上下轻滑，否则应重新调整。

3、紧固刀片方头螺钉时,用手扶住刀片,防止刀片向前或向下移位。

4、启动电机开关，检查磨刀器是否正常。

1.The power has to be cut off and the blade shall be settled at the undermost end by turning the knob"F" before replacing the blade.

2.The blade corner point "B" must be positioned at base board plane "C" 3-5 mm after installing the blade, and turn the knob "F" to guarantee the knife to slide up and down gently, or readjustment shall be carried out.

3.The blade shall be buttressed by hand while fastening the fastening square head screw of the blade, for preventing the blade from shifting forwards or downwards.

4.Turn on the motor for checking whether the sharpener is in gear.

四、磨刀器的调整(切断电源)　SHARPENER ADJUSTMENT (POWER CUT)

(一) 紧定滚轮架的调整 Set roller bracket adjustment

1、按下磨刀手柄在中间空档位置，将磨刀架移到下端位置松开挡片螺钉，使立柱与挡片分开；

2、松开左右紧定滚轮组件螺钉，调整左右紧定滚轮架对应的紧固螺钉；

3、将挡片调至贴住立柱,紧固挡片螺钉,保证磨刀架上下运动时,紧定滚轮沿着立柱两侧滚动不被卡住。

1. Press handle to the middle neutral position, then move the knife board to lower end and loosen the plate, for separating the pillar from the plate.

2. Loosen the screws of the left and right set roller subassemblies, and then adjust the fastening screws in correspondent with the left and right let roller bracket.

3. Adjust the plate to attach the pillar, and fasten the plate screws to guarantee that the set roller shall not be blocked when rolling along the both sides of the pillar during the up and down movement of the knife board.

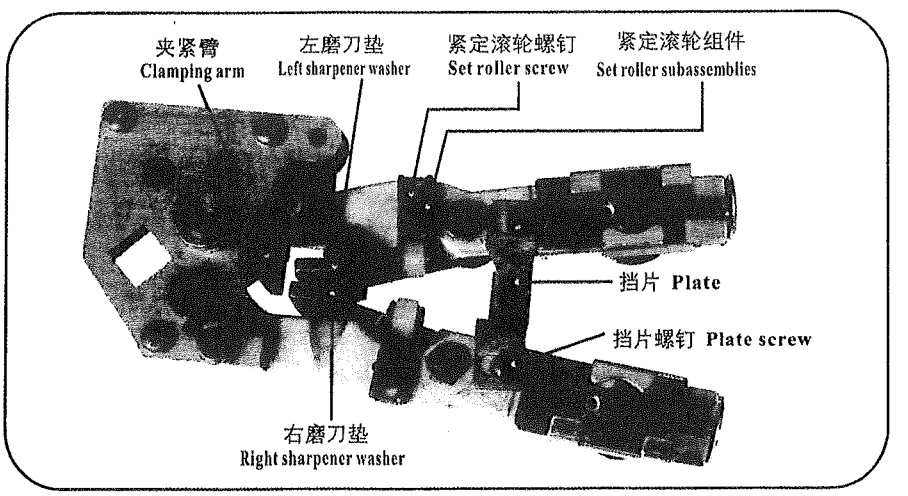

(二) 磨刀垫及夹紧臂的调整 Sharpener washer and clamping arm adjustment

1、左右磨刀垫应能自由转动，上下不允许有窜动，磨刀架上下运动过程中夹紧臂能起到固定磨刀垫作用；

2、若夹紧臂或左磨刀垫上的齿纹磨损，应立即更换；

3、磨刀架安装砂带时，左磨刀垫上的固定螺钉和刀片之间应确保0.1mm的间隙，如需调整，松开螺母将螺钉调整到规定要求的位置，再将螺母紧固。

1. The right and left sharpener washers are allowed to turn freely and without moving up and down. The clamping arm is capable of fastening the sharpener washer during the up and down movement of the knife board.

2. The clamping arm and left sharpener washer shall be immediately replaced in case of the abrasion of their insection.
3. A clearance of 0.1mm shall be ensured between the fastening screw and blade on the left sharpener washer when installing the abrasive belt on the knife board. If adjustment is required, loosen the nut and adjust the screw to the provided position, and then fasten the nut.

（三）磨刀器下限位置的调整 Lower limit position adjustment of sharpener

1、当磨刀器上的磨刀架处于最低端位置，刀片处于最高端位置时，刀片的转角刀尖应在左磨刀垫上的砂带中间处，如砂带位置太高，刀片的尖部磨不到，如砂带位置太低，刀片的底部易将砂带戳掉,造成转角刀尖磨成圆弧状。
2、将丝杆管套上拆掉管帽，插入专用扳手。
3、用专用扳手拧松丝杆上螺母和锁紧螺母。
4、视客户使用过程中刀片（转角刀尖点）磨损程度判定,作出相应的（用专用扳手）调整，顺时旋转锁紧螺母，升高磨刀架下极限位置，逆时针旋转丝杆上螺母，升高磨刀架其下极限位置;反之，降低磨刀架下极限位置。
(注：丝杆螺母转一圈，位移约0.8mm.)
5、调整到正确位置后，再把丝杆上螺母和锁紧螺母拧紧即可。

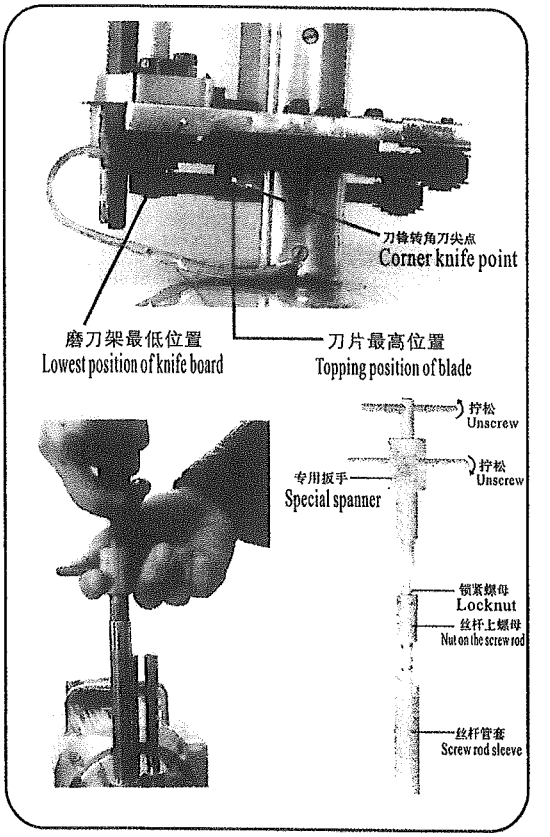

1. The corner knifepoint shall be in the middle of the abrasive belt on the left sharpener washer while the knife board on the sharpener is at the lowest position and the blade at the topping position,. The knifepoint cannot be sharpened if the position of abrasive belt is too high, and the abrasive belt is prone to be torn by the bottom of knife if the abrasive belt is positioned too low, resulting in the corner knifepoint to be sharpened into to circular arc.
2. Insert the special spanner after remove the tube cap from the screw rod sleeve.
3. Unscrew the nut and fastening screw on the screw rod by special spanner.
4. Make corresponding adjustment (by special spanner) according to the attrition rate of the blade (corner knifepoint) during the application of the user. The limit position under the knife board shall be heightened through, clockwise turning the locknut and counter-clockwise rotating the nut on the screw rod; vice versa, the limit position under the knife board shall be decreased.
(Note: the displacement is about 0.8mm while the nut on the screw rod rotates for one circuit)
5. Screw down the nut on the screw rod and the locknut after being adjusted to the right position.

（四）刀片磨削宽度的调整 Sharpening width adjustment of the blade

1、刀片两侧磨削宽度大约1/12（相当于1.2mm）。
2、装入新砂带和刀片时，在刀片刃口涂色，操作磨刀器，确保两侧刀刃磨削均匀，上下宽度一致，且不出现卷刃现象；如需调整参照紧定滚轮架的调整方法。
3、当刀片磨损到2-3mm时，应适当调整左磨刀垫角度。方法：用扳 手放松左磨刀垫调节螺母，再用内六角扳手逆时针倒退，要求并使调节螺钉和刀片之间确保0.1mm的间隙，再将螺母紧固。如刀片磨损到4-5mm时，更换新刀片，调整左磨刀垫调节螺钉，保证刀片左右面磨削宽度一致。

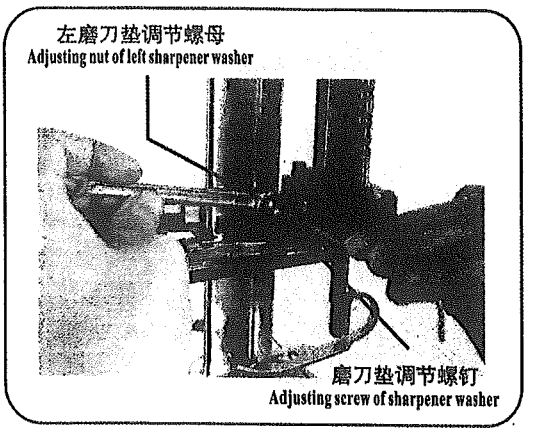

1.Sharpening width at the both sides of the blade is about 1/12 (equal to 1.2mm)
2.The cutting edge of the blade shall be painted when and the sharpener shall be operated to guarantee the even sharpening of the edge at the both sides, the uniform of the upper and lower widths and the non appearance of frizzy edge when installing new abrasive belt and blade. Please refer to the adjusting method of set roller bracket for adjustment.
3.The angle of the left sharpener washer shall be properly adjusted while the edge is worn to 2-3mm. Method: Loosen the adjusting nut of the left sharpener washer with spanner and contrarotate it with socket head wrench to guarantee a clearance of 0.1mm between the adjusting screw and blade, and then tighten the nut. The knife shall be replaced if it is worn to 4-5mm, and the adjusting screw of the left sharpener washer shall be adjusted to guarantee the equal sharpening width on the left and right sides of the knife.

五、换砂带　　ABRASIVE BELT REPLACEMENT

1、切断电源，磨刀器处于自锁位置，保证偏心轮与摩擦轮处于分离状态；

2、用手推动滑动小轮架，放松砂带涨力，取下磨损的砂带；

3、将新砂带套入传动小轮中，砂带应确保放在磨刀垫与刀片之间，推动滑动小轮架，砂带套入滑动小轮上，用手转动滑动小轮砂带应旋转灵活。

1.Cut off the power, settle the sharpener in self-locked position and guarantee the friction wheel and eccentricity wheel are in separate state.

2.Push the sliding truckle carrier by hand to release the tension of the abrasive belt, for taking off the worn abrasive belt.

3.Enclose the new abrasive belt to the driver pulley and make sure the abrasive belt is positioned between the sharpener washer and the knife, and then drive the sliding truckle carrier to enclose abrasive belt to the sliding truckle with the condition that the abrasive belt can rotate flexibly when turning the sliding truckle by hand.

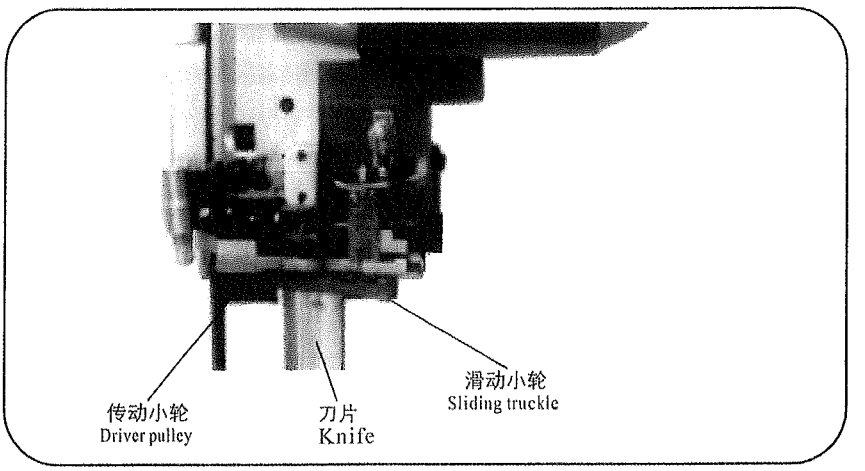

机器的故障分析及维修方法　　MALFUNCTION ANALYSIS & MAINTENANCE

机器常见故障维修示意图　　SKETCH MAP FOR MAINTENANCE OF COMMON MALFUNCTION

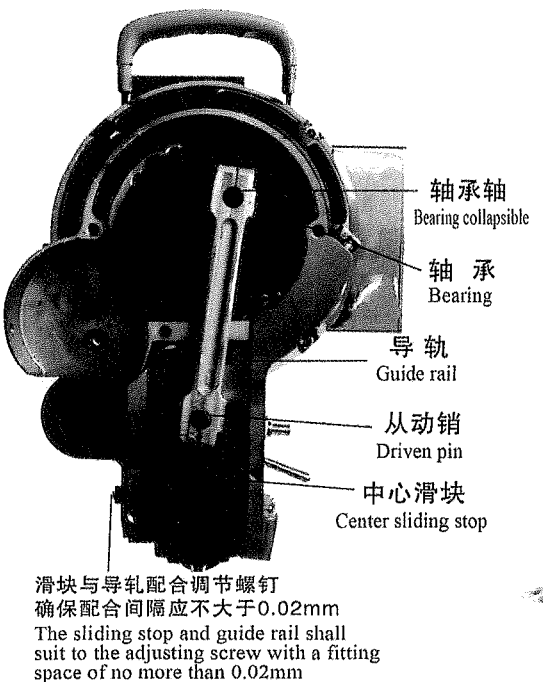

图一

Figure 1

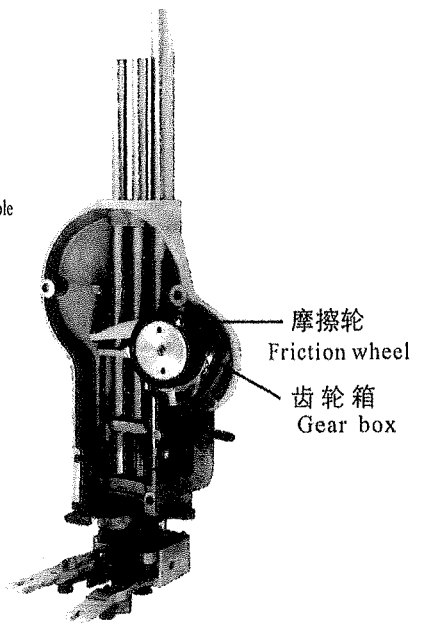

图二

Figure 2

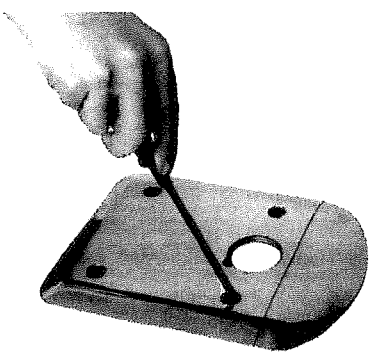

图三

Figure 3

故　障 Malfunction	主要原因 Main causes	检修方法 Maintaining method
电机启动不良 （超过三秒钟） Poor startup of motor (over three seconds)	电机内杂物，电机开关接触不良 Sundries in motor lead to poor switch contact of the motor.	检测电机开关，插座处是否有虚焊或脱落，如有损坏更换零件。 Check the motor switch to see whether there is false welding or falling off, and replace the damaged parts.
	使用电压低 Working voltage is low.	电压低于175V，可参阅第8 页（三）进行直流电压检测
	油粘度过高 Oil viscidity is too high	换30号机油 Replace No. 30 motor oil
	机架部位滞重、偏重 Bracket is too heavy	参照第4页的(7)和第5页的(9) Refer to 7 on Page 4 and 9 on Page 5.
电机冒烟 Smoking of motor	电子系统（DC21-1）出现驱动二相 Driving two-phase appears in electronic system (DC21-1)	更换 Replace
	伺服电机(DC16)已损坏 Servo motor (DC16) is damaged.	
电机高温 High temperature of motor	伺服电机线圈有单极烧毁 Monopole of the servo motor coil is burnt.	电机更新 Replace the motor
	通风口被绒尘堵死 The blow vent is blocked by fine dust.	清除 Cleanup
	负载过大 over loading	减少裁剪层数 Reduce the cutting layers
压脚放不下 The pressure foot cannot be settled	压脚杆（DC134）变形弯曲 The foot bar is deformed and bent	调整修理 Adjust and repair
	压脚托架（DC119）安装不良 The pressure foot bracket is poorly installed	
机器震动大 Over-vibration of machine	轴承(DC61)损坏 Bearing failure	更换 Replace
	底盘滚轮组件（DC87）损坏 Roller assembly on basal disc is damaged.	
	连杆（DC64）损坏 The connecting rod is damaged.	
	导板（DC83）或底座（DC84）损坏 The guide plate or plate is damaged.	
裁剪后布料底层有毛边 Bottom of cloth with deckle-edged after cutting out	磨刀后刀片卷刃 Knife has frizzy edge after sharpening	参阅第11页 (三) 换刀片 Refer to III on Page 11 for blade replacement.
	刀片安装位置不正确 The fixing position of blade is not correct.	
	刀片尖部不锐 Knifepoint is not sharp	将刀片尖部开刃 Sharpen the knifepoint
脚板中间塞布毛 Cloth flocks are blocked between baseboards	脚板(DC79)磨损，中间间隙为0.9mm Baseboard is worn and the middle clearance is 0.9mm	更换脚板 Replace the baseboard

故 障 Malfunction	主要原因 Main causes	检修方法 Maintaining method
启动磨刀手柄，磨刀架不工作 Knife board not work while starting the handle	摩擦轮(DC149)与偏心轮(DC37)分离状态或已损坏 Friction wheel (DC149) and eccentricity wheel (DC37) are in separate state or damaged.	调整分离或更换摩擦轮 Adjust the separation or replace the friction wheel.
	摩擦轮 (DC149)或偏心轮(DC37)沾污油迹 The friction wheel (DC149) or eccentricity wheel (DC37) is spotted by smear.	用干布擦干油污 Erase smear with dry cloth
	按下磨刀手柄(DC102)时用力过猛或过快 It is overexerted or too fast when press the handle	请抬起拔叉(DC107)重新启动，几次后便知道怎样的力度最合适，磨刀时应缓慢或稍微用力。 Please uplift the fork (DC107) for restarting. The most suitable strength shall be determined after several times of restarts. When sharpening, it shall be slowly or applied with slight force.
	可能存在磨刀机匣偏重 The sharpener case is likely to be overweight.	调整维修 Adjust an maintain
磨刀不锋利 Sharpener obtuse	砂带(DC221)损坏 Abrasive belt failure	换新 Replace
	砂带(DC221)磨不到刀片(DC5) The abrasive belt fails to contact the blade.	参阅第13页（四）刀片磨削宽度的调整 Refer to (IV) Sharpening width adjustment of the blade on Page 13.
	刀片(DC5)已磨尽 The blade is worn out.	更换刀片 Replace the blade
	磨刀角度不均匀 The sharpening angle is uneven.	参阅第13页（三）磨刀器下限位置的调整 Refer to (III) lower limit position adjustment of the sharpener on Page 13.
	刀片底端磨损过多 The bottom end of the blade is over-worn.	
空载噪声大 Big idling noise	中心滑块(DC71)与导轨(DC65)之间间隙太大 Clearance between the center sliding stop and guide rail is too large.	拆下连杆，调整中心滑块与导轨，使间隙不大于0.02mm，且中心滑块上下运动轻滑自如（见14页附图一）。 Remove the connecting rod and adjust the clearance between the center sliding stop and the guide rail to the value of no more 0.02mm, and the center sliding stop is capable of sliding up and down freely. (Refer to Figure one on Page 14)
	偏心轮上的轴承(DC61)磨损严重 Bearing on eccentricity wheel was badly frayed	拆下偏心轮，旋下轴承盖，取出更换轴承。(见14页附图一) Remove the eccentricity wheel and screw off the bearing cover, and then take out the bearing to be replaced (Refer to Figure one on Page 14)
	连杆(DC64)与轴承(DC61)或滑块纵动销(DC73)有窜动 There is movement between connecting rod and bearing (DC61) or driven pin of the sliding stop (DC73).	调整连杆与轴承及纵动销的配合，拧紧牢固 Adjust juncture of the connecting rod with the bearing and driven pin, and then screw it down.
磨刀时噪声大 Big noise when sharpening	摩擦轮(DC149)磨损 Friction wheel was frayed	拆下磨刀机匣，顺时针旋下更换的摩擦轮（见14页附图二） Remove the sharpener case and clockwise screw off the friction wheel to be replaced. (Refer to Figure two on Page 14)
	磨刀机构齿轮箱中的齿轮严重磨损 Gear in the gear box of the sharpening mechanism is badly frayed	拆下磨刀机匣，顺时针旋下摩擦轮，取出更换的磨损齿轮（见14页附图二） Remove the sharpener case and clockwise screw off the friction wheel, and then take out the worn gear to be replaced. (Refer to Figure two on Page 14)
磨刀架不正常滑落 Abnormal sliding off of the knife board	齿轮和双向丝杆(DC97)无润滑脂 There is no lubricant grease between the gear and the bidirectional screw rod (DC97).	拆下丝杆管套(DC140)管帽和拧下磨刀架(DC203)平端紧定螺钉，加入润滑脂 Remove the cap of the screw rod sleeve (DC140) and screw down the flat-ended set screw of the knife board (DC203), and then apply lubricant grease.
	挡片(DC188)安装不良 The plate is poorly installed.	调整维修 Adjust and maintain
裁剪时手推机器阻力大 Resistance of machine is too great while cutting	滚轮衬套组件(DC89)被绒尘挤住 The roller bush assembly (DC89) is jammed by fine dust.	从底座上面圆孔中压出滚轮，取出滚轮轴，清洗滚轮内及滚轮轴外表面。（见14页附图三） Extrude trolley from above hole of pedestal and take off the trolley axle, and then clean the inside and outside of the trolley. (Refer to Figure three on Page 14)
磨削后的刀片两边宽度不一致 Widths on both sides of the blade are not equal after sharpening	左磨刀垫(DC211)角度偏移 Angle of lest sharpener washer (DC211) is deviated.	适当调整左磨刀垫内六角锥端紧定螺钉(DC219) Properly adjust the set screw with hexagonal tapering point in the left sharpener washer screw (DC219)
	刀片磨损2-3mm Knife was worn for 2-3mm	参阅第13页（四）刀片磨削宽度的调整 Refer to (IV) sharpening with adjustment of the blade on Page 13.

随机附件 ATTACHED ACCESSORIES

零件图片 Parts photos			
零件号及名称 Part No. and name	DC221 砂带 abrasive belt	DC 222 电源线插头组件 power cord plug assembly	
数量 Quantity	10	1	
零件图片 Parts photos			
零件号及名称 Part No. and name	DC 224 四角套筒 tetragonal sleeve	DC 226 油壶 oil pot	DC 227 清扫器 sweeper
数量 Quantity	1	1	1
零件图片 Parts photos			
零件号及名称 Part No. and name	DC 228 螺丝刀 screwdriver		
数量 Quantity	1		

（随机附件的品类和数量，最终解释权归公司所有）

附件说明

不锈钢网孔手套（指定选配）

网孔手套经过精心的设计，轻巧简单，结实耐用，戴上后可以保证手能自由灵活的，同时透气性好,手不会出汗。并且，这种手套有独特的腕扣设计，可以很方便的将左手手套翻转，变成右手使用。

（手套通常设计为左手使用）

⚠ 警 告

1、不锈钢手套能防止操作时手被刀片割伤，但是不能预防其它意外。因此带上手套后仍需小心，注意安全。

2、使用圆刀裁布机时，不得使用这种手套。旋转的刀片会将手套绞进机器，发生意外。

※所有的手套都设计左手使用，结构有3指或5指，

（如果是右手使用，只需将手套翻转过来即可）

详见下表：

图 示	编 号	规 格
	31	三指，特小号
	32	三指，小号
	33	三指，中号
	34	三指，大号
	35	三指，特大号

图 示	编 号	规 格
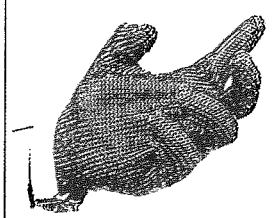	51	五指，特小号
	52	五指，小号
	53	五指，中号
	54	五指，大号
	55	五指，特大号

Instructions to accessories

Stainless steel mesh gloves (designated matching)

The mesh gloves are light, handy, simple, sinewy, and enduring. After wearing the gloves, it ensures that the two hands can move freely. Meanwhile, the gloves have a good permeability, so the hands will not sweat. In addition, with its unique wrist buckling design, the left glove can be overturned conveniently so as to be used by the right hand.

(The gloves are usually designed for the left hand)

⚠ Warning

1. The stainless steel gloves can prevent the hand to be cut by the blade, but will not be helpful for prevention of other accidents. Thus, even with the gloves on the hands, it's still necessary to take care for safety.

2. This kind of gloves can not be used when using the cutting disc fabric cutting machine. The rotating blades will wind the gloves into the machine, and there will be accidents.

※All the gloves are designed for the left hand, and the structure may be three fingers or five fingers (if being used by figures of the right hand, just overturn the gloves).

See the table below for details:

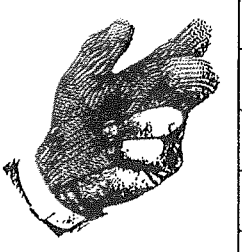	31	Three fingers, mini-size
	32	Three fingers, small-size
	33	Three fingers, medium-size
	34	Three fingers, large size
	35	Three fingers, Outsize

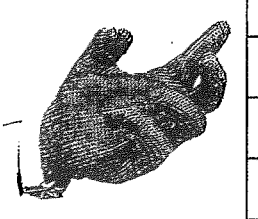	51	Five fingers, mini-size
	52	Five fingers, small-size
	53	Five fingers, medium-size
	54	Five fingers, large size
	55	Five fingers, Outsize

磨刀砂带（指定选配）
Sharpening abrasive belt (designated matching)

本公司配置锋钢刀片，并提供了4种选配的不同磨刀砂带，可以磨出4种不同的刀刃，分别适合裁剪不同的织物。

The company provides high-speed steel blades. And four types of matching sharpening abrasive belts are also provided for four types of blades for cutting of different fabrics.

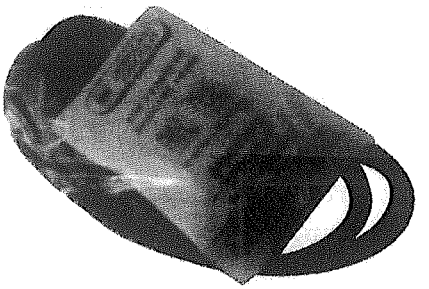

磨刀砂带
Sharpening abrasive belt

下表所示的是250倍显微镜下的刀刃情况：

The following table gives descriptions of the blades under the 250-time microscope:

类 型 Type	图 示 Graphics	砂带特征 abrasive belt characteristics	刀片刃口 Cutting edge of the blade	使 用 范 围 Using range
1	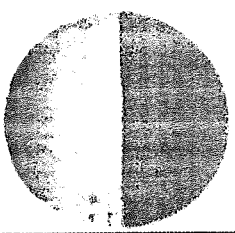	细砂带 Fine abrasive belt	细刃 Thin edge	适于裁剪合成纤维：混纺针织或松编织物、丝织品、毛织品和棉絮 Suitable for cutting of synthetic fiber: blending knitting or loose braided fabrics, silk knitting, woolen knitting and battings
2	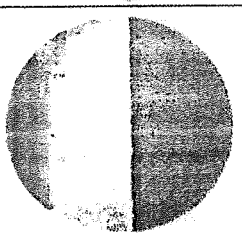	中砂带 Medium abrasive belt	中刃 Medium edge	适于裁剪人造丝棉织品、轻的布毛料、热带衣料套装料和其他类似衣料 Suitable for cutting of manmade silk wadding knitting, light cloth woolens, tropic apparel fabric suits and other similar apparel fabrics
3	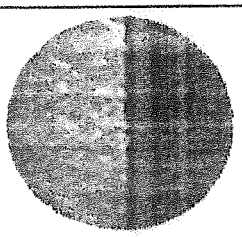	粗砂 Coarse abrasive belt	粗刃 Roughness edge	适于裁剪较重质地的布料，紧编料、口袋布、轻斜纹布、外套布、薄人造皮和橡胶布等 Suitable for cutting of heavy cloth, tight weaving materials, bag cloth, light drilling, oat cloth, thin leatherette and rubber cloth.
4	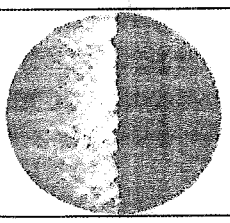	极粗砂带 Extremely coarse abrasive belt	极粗刃 Extremely roughness edge	适于裁剪厚斜纹布、兽皮、帆布厚人造皮等 Suitable for cutting of thick drillings, animal skins, canvas and thick leatherette.

零件图解说明

ILLUSTRATED PART INSTRUCTION

电脑伺服裁剪机是经过精心设计的，可以长期使用而不发生故障。这些图解目录详细明了，便于您的订购。订购零件时，请与附近的代理商或本公司联系。

（注意：订购零件时请注明机型和零件编号）

With its careful design, the computer servo cutting machine can be used for a long time without any failure. These graphic contents are simple and detailed for your order. Please contact local agent or the company for ordering these parts.

(Note: please identify the machine model and the part No. when ordering the parts)

不同尺寸裁剪机零件表 List of parts with Different Sizes

13"、12"、1O"、8"、6"

零件号 Part N0.	名 称	DESCRIPTION	尺寸规格 Dimension				
			13"	12"	1O"	8"	6"
DC 134	压脚杆	Knife Guard Rod	464	414	364	314	264
DC139	方导杆管套	Tube For Square Shaft	345	295	245	195	195
DC140	丝杆管套	Tube For Screw Shaft	344	294	244	194	194
DC138	方导杆	Square Shaft	397	347	297	247	197
DC97	双向丝杆	Screw Shaft	469	419	369	319	269
DC77	刀壳组件	Knife Slide	369	319	269	219	169
DC5	刀片	Knife	394	344	294	244	194
DC76	立柱	Standard	374	324	274	224	174

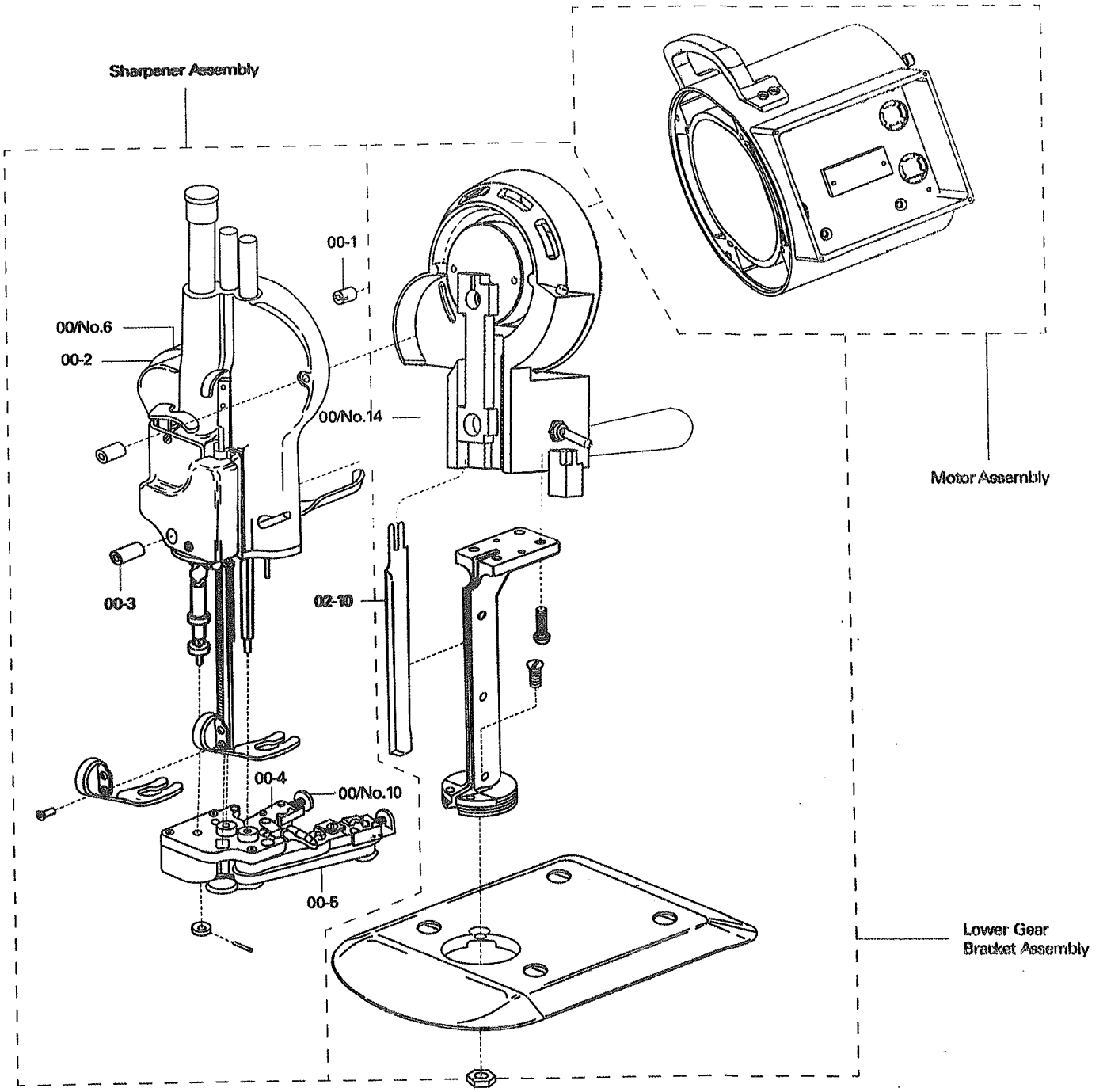

零件号 Part N0.	名 称	Description	数 量 No.Req'd
DC1	专用短螺母	Sharpener Hold-Down Nut	4
DC2	螺母	Sharpener Hold-Down Nut	1
DC3	立柱固定螺钉	Standard-to- Bearing Screw	1
DC4	立柱螺钉	Front-to-Rearing-Bearing Screw	4
DC5	刀片	Knife	1

伺服电机组
Servo Electric Motor Modul

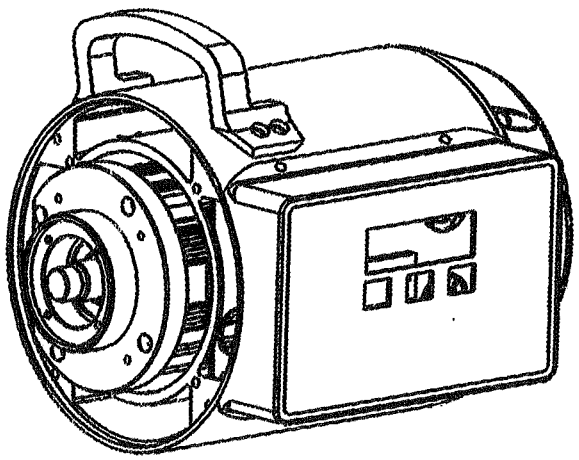

零件号 Part N0.	名 称	Description	数 量 No.Req'd
DC6	旋钮	Turning Knob	1
DC7	弹簧	Clutch Spin	1
DC8	轴用弹性挡圈	Retaining Ring	1
DC9	风轮盖螺钉	Screw	4
DC10	风轮盖	Fan Cover	1
DC11	风轮螺钉	Screw	2
DC12	风轮	Rotor Fan	1
DC13	电源插头组件	Attachment Plug	1
DC14	插头组件	Terminal Block	1
DC15	插头螺钉	Screw	2
DC16	电机	Motor	1
DC17	电机外壳	Motor Cover	1
DC18	提手柄	Carrying Handle	1
DC19	提手柄螺钉	Screw	4
DC20	电路保护罩	Cover	1
DC21	控制面板	Adjust Board	1
DC21-1	智能模块	Intelligence Module	1
DC22	提手柄螺钉	Screw	4

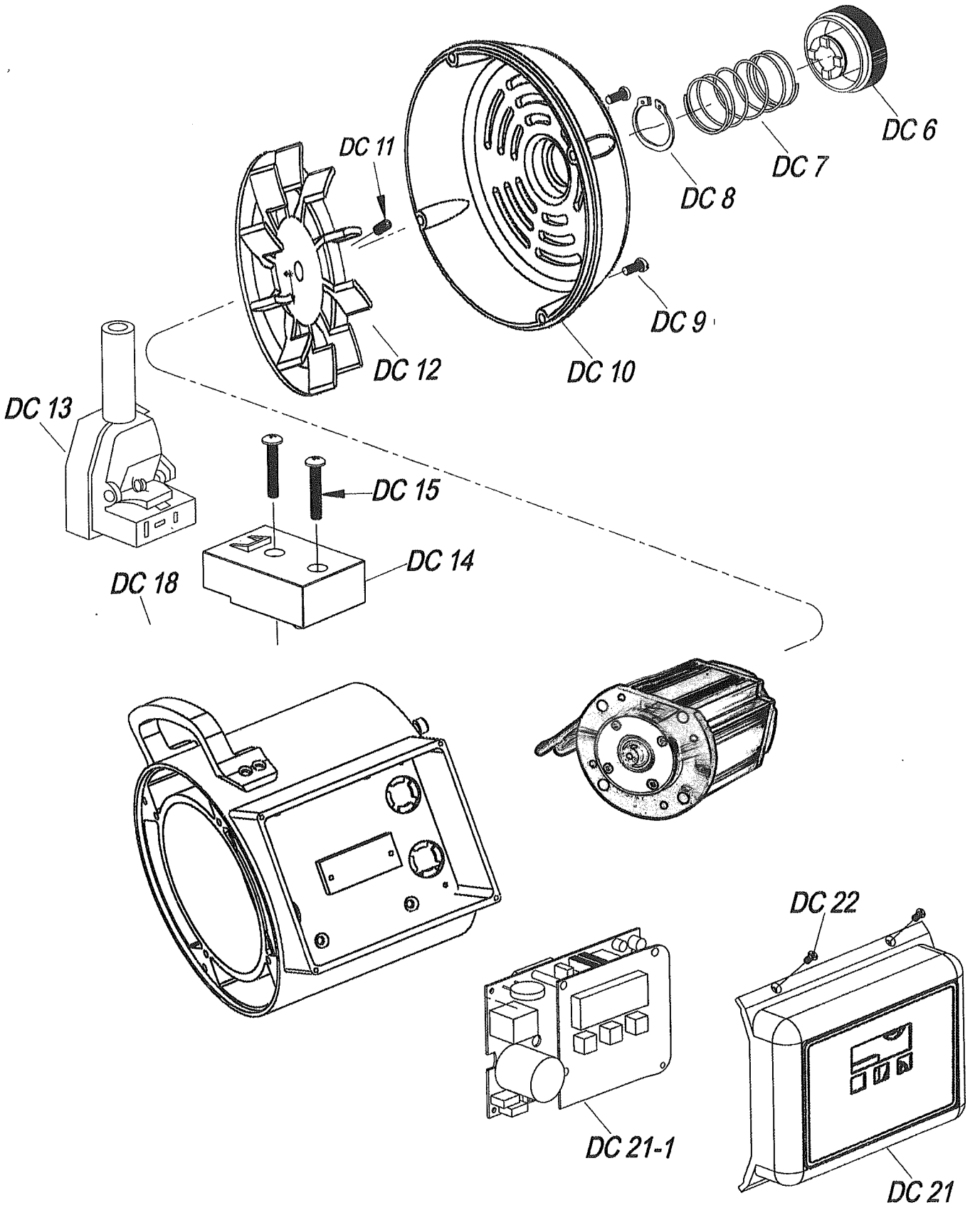
DC 6
DC 7
DC 8
DC 9
DC 10
DC 11
DC 12
DC 13
DC 14
DC 15
DC 18
DC 21-1
DC 22
DC 21

前端盖组件
Front Bearing Housing Assembly

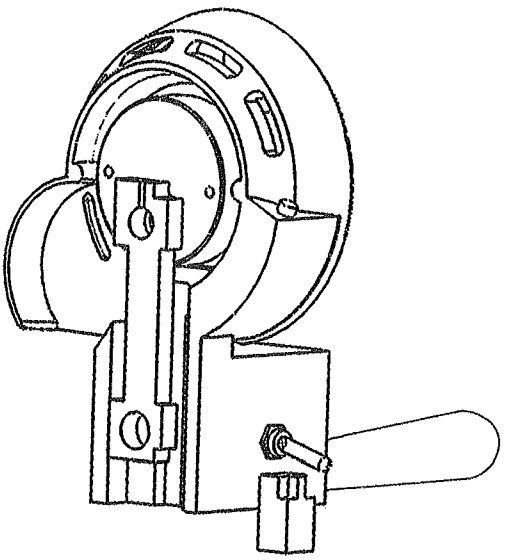

零件号 Part N0.	名 称	Description	数 量 No.Req'd
DC23	电容器罩螺钉	Screw	6
DC24	电容器罩	Capacitor Cover	1
DC25	启动电容	Capacitor	1
DC26	电容器罩 (小)	Capacitor Cover(small)	1
DC27	螺钉	Screw	4
DC28	前机匣	Front Bearing Housing	1
DC29	螺钉	Screw	4
DC30	力板	Handle Bracket	1
DC31	内六角螺钉	Screw	1
DC32	力板螺钉	Screw for Handle Bracket	1

零件号 Part N0.	名 称	Description	数 量 No.Req'd
DC33	木手柄	Operating Handle	1
DC34	木手柄锁紧螺母	Operating Handle Lock Nut	1
DC35	螺钉	Screw	4
DC36	双头螺栓	Stud, upper	2
DC37	偏心轮	Crank	1
DC38	螺母	Nut	3
DC39	垫圈	Washer	3
DC40	内六角平端紧定螺钉	Screw	3
DC41	双头螺栓	Stud, Lower Mounting	1
DC42	双头螺栓	Stud, Lower Mounting	1
DC43	支撑螺套	Guide Adjustment Nut	3
DC44	圆柱头内六角螺钉	Screw	2
DC45	电机开关	Switch	1
DC46	开关端	Switch Base	1
DC47	开关螺钉	Screw	4
DC48	开关	Switch	1
DC49	垫圈	Washer	1
DC50	螺母	Nut	1
DC51	调节旋钮	Agjusting Knob	1
DC52	螺钉	Screw	1
DC53	螺钉	Screw	1
DC54	螺母	Nut	1
DC55	油杯座螺钉	Screw	2
DC56	油杯头	Oil Cup	1
DC57	O 型圈	O Ring	1
DC58	油杯体	Oil Body	1
DC59	油杯组件	Oil ling device	1
DC60	传动销	Shaft for Ball Bearing	1
DC61	单列向心球轴承	Seated Crand Ball Bearing	1
DC62	传动销螺母	Lock Nut for Shaft	1
DC63	轴承挡圈	Crank Ball Bearing Lock Nut	1
DC64	连杆	Connecting Rod	1
DC65	导轨	H. Guide	2
DC66	垫片	Guide Washer	1
DC67	圆柱头内六角螺钉	Screw	6
DC68	连杆螺钉	Screw	1
DC69	平端紧定螺钉	Screw	1
DC70	垫片	Connecting Rod Washer	1
DC71	中心滑块	Cross Head	1
DC72	油绳	Wrist Pin Felt Pad	1
DC73	从动销	Wrist Pin	1
DC74	固定刀垫片	Knife Lock Washer	1
DC75	方头螺钉	Screw	1
DC75A	油杯座组件	Oil Tube Assembly	1
DC75B	油杯座	Oil Tube	1
DC75C	螺钉	Screw	1
DC75D	油杯座盖	Oil Tube Cover	1
DC75E	油绳	Long Wicking	1
DC75F	O 型圈	O Ring	1

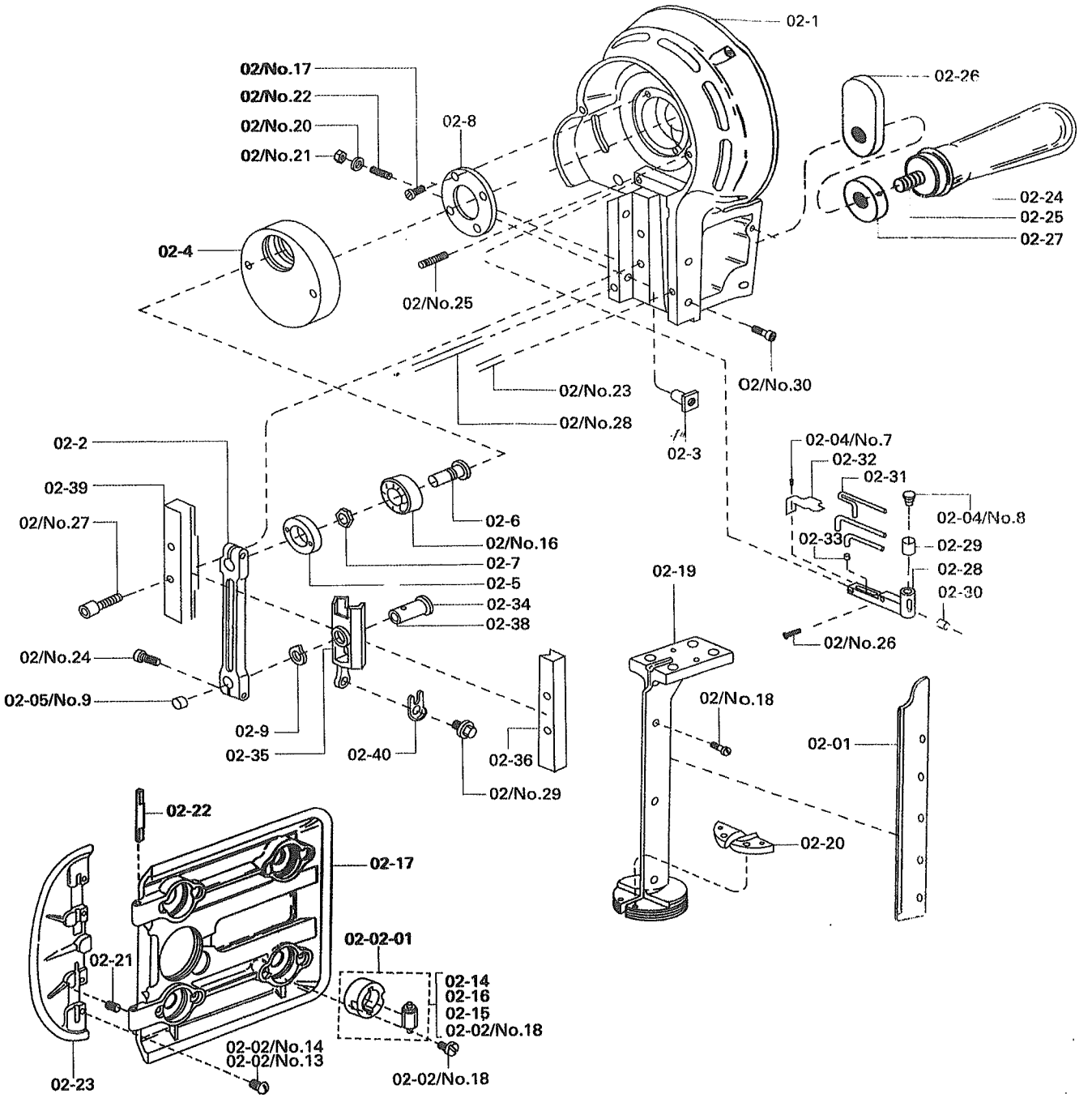

Part No.	Description	Qty
02-01	Knife slide	1
02-1	Front bearing housing	1
02-2	Connecting rod	1
02-3	Guide adjustment nut	3
02-4	Crank	1
02-5	Crank ball bearing,locknut	1
02-6	Shaft for ball bearing	1
02-7	Lock nut for shaft	1
02-8	Front ball bearing retainer	1

刀夹底盘组
Standard and Beseplate Assembly

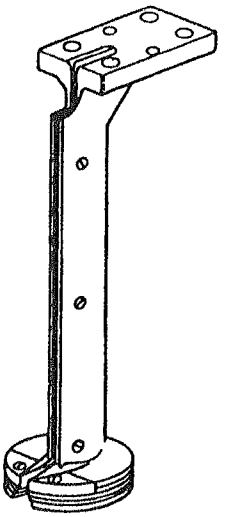

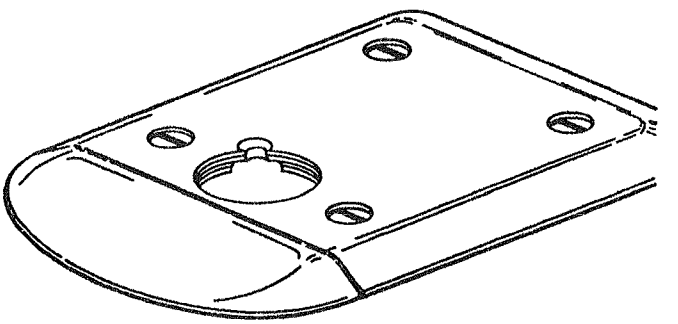

零件号 Part N0.	名 称	Description	数 量 No.Req'd
DC76	立柱	Standard	1
DC77	刀壳组件	Knife Slide	1
DC78	刀壳螺钉	Screw	3
DC79	脚板	Throat Plates	2
DC80	脚板螺钉	Screw	2
DC82	导板连接轴	Hinge Pin	2
DC83	导板	Plate Wing	1
DC84	底座	Plate	1
DC84-1	导板弹簧	Plate Wing Spring	2
DC85	止动垫片	Lock Washer.#8	2
DC86	底板压轴螺钉	Clamp Screw for Roller	12
DC87	滚轮组件	Ruber Roller all set	4
DC88	橡胶安装座组件	Ruber Mounted Roller	4
DC89	滚轮衬套组件	Roller Shell	4

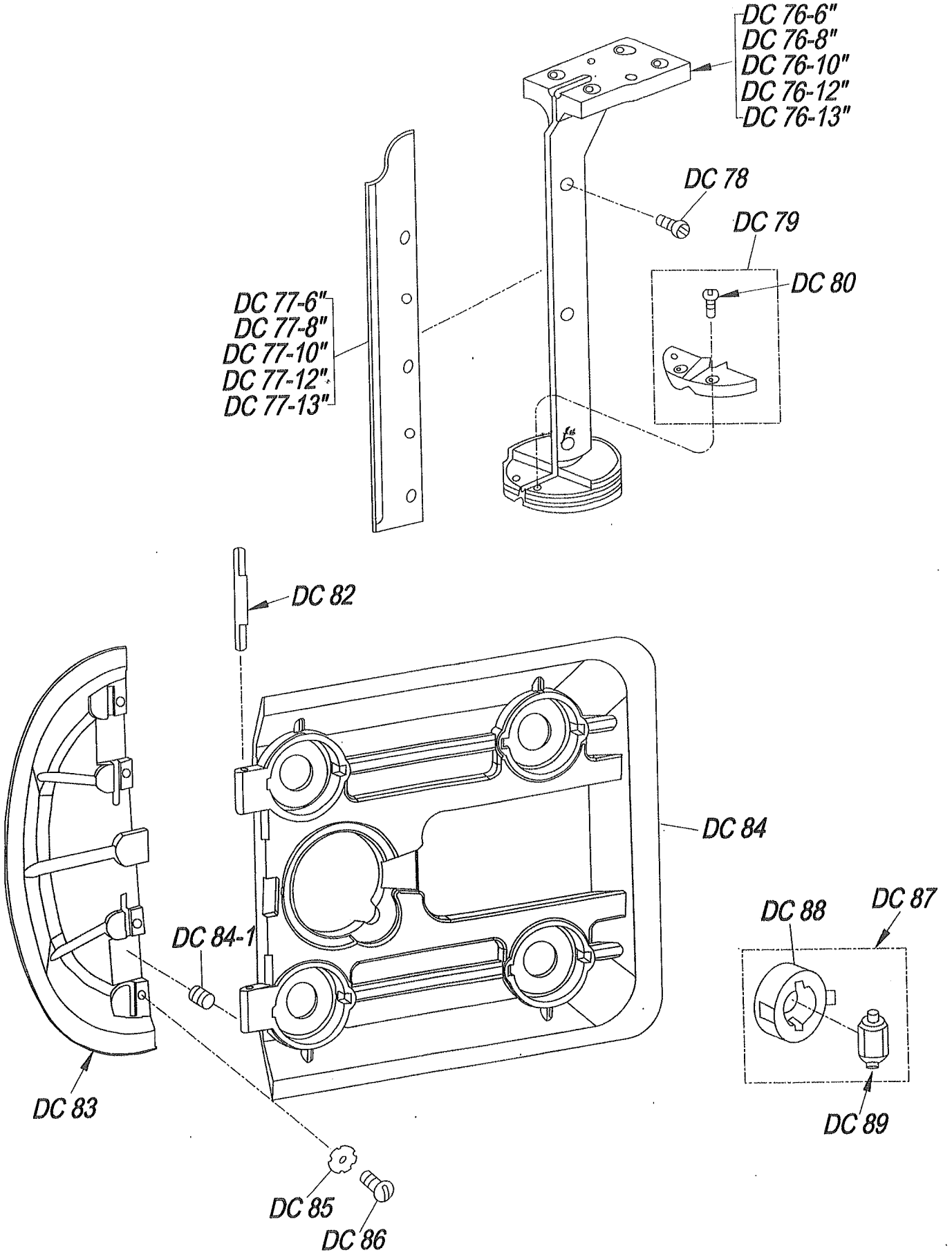
DC 76-6"
DC 76-8"
DC 76-10"
DC 76-12"
DC 76-13"
DC 78
DC 79
DC 80
DC 77-6"
DC 77-8"
DC 77-10"
DC 77-12"
DC 77-13"
DC 82
DC 84
DC 84-1
DC 88
DC 87
DC 83
DC 89
DC 85
DC 86

磨刀器组
前面 *Front*
Front Sharpener Housing Assembly

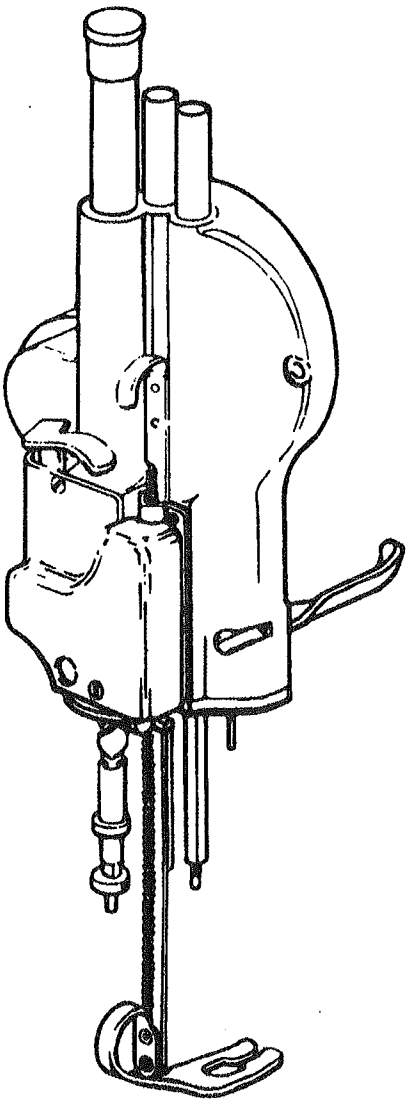

零件号 Part NO.	名 称	Description	数 量 No.Req'd
DC90	塑料帽	Cap of Tube	1
DC91	锁紧螺母	Stop Nut for Screw Shaft	1
DC92	丝杆上螺母	Nut for Screw Shaft	1
DC93	轴承片	Thrust washer for Nuts	3
DC94	轴承组件	Thrust Ball Bearing	3
DC95	左向螺母	L.H.Nut for screw Shaft	1
DC96	右向螺母	R.H.Nut for screw Shaft	1
DC97	双向丝杆	Screw Shaft	1
DC98	双向丝杆挡圈	Collar for Fxtensiom	1
DC99	磨刀手柄组件	Release Lever with Cam	1
DC100	磨刀机匣组件	Sharpener Housing (With Bushings and Tubes)	1
DC101	弹性垫圈	Spring washer for Release Lever	1
DC102	磨刀手柄	Release Lever With Cam	1
DC103	偏心块	Cam	1
DC104	磨刀手柄柳钉	Screw	1
DC105	圆柱端紧定螺母	Set Screw for Cam	1
DC106	磨刀手柄活动螺钉	Screw for Release Lever	1
DC107	拨叉	Latch for Cam	1
DC108	拨叉弹簧	Spring for Latch	1
DC109	拨叉定位螺钉	Screw for Latch	1
DC110	发条销下轴衬	Bearing for Cam Shaft	1
DC111	发条销上轴衬	Bearing for Cam Shaft	1
DC112	发条销	Shaft for Cam	1
DC113	锁紧法条	Cam Spring	1
DC114	发条销限位螺钉	Cam Shaft Spring Screw	1
DC115	压脚放松手柄	Pressure Foot Lever	1
DC116	放松手柄弹簧	Spring for Pressure Foot Lever	1
DC117	放松手柄螺钉	Pressure Foot Lever Screw	1
DC118	扩齿托架垫片	Spacer for Knife Guard Lock Bracket	1
DC119	压脚托架	Knife Guard Lock Bracket Complete	1
DC120	压脚定位板	Lock for Pressure Foot	1
DC121	护齿弹簧	Spring for Knife Guard Lock	1
DC122	锁紧螺母	Nut for pressure Foot Lock	1
DC123	支持桩子	Knife Guard Lock Bracket Only	1
DC124	护齿螺钉	Screw for Knife Guard Lock	1
DC125	压脚托架螺钉	Screw	4
DC126	压脚托架组件	Pressure Foot Lock Bracket Complete	1
DC127	前罩	Cover Over Cam	1
DC128	前罩下螺钉	Screw	1
DC129	前罩上螺钉	Screw	1
DC130	压脚螺钉	Screw for Pressure Foot Shoe	2
DC131	压脚	Pressure Foot shoe	1
DC132	压脚杆提手柄螺钉	Serew	2
DC133	压脚杆提手柄	Lift Handle for Knife Guard Rod	1
DC134	压脚杆	Knife Guard Rod	1

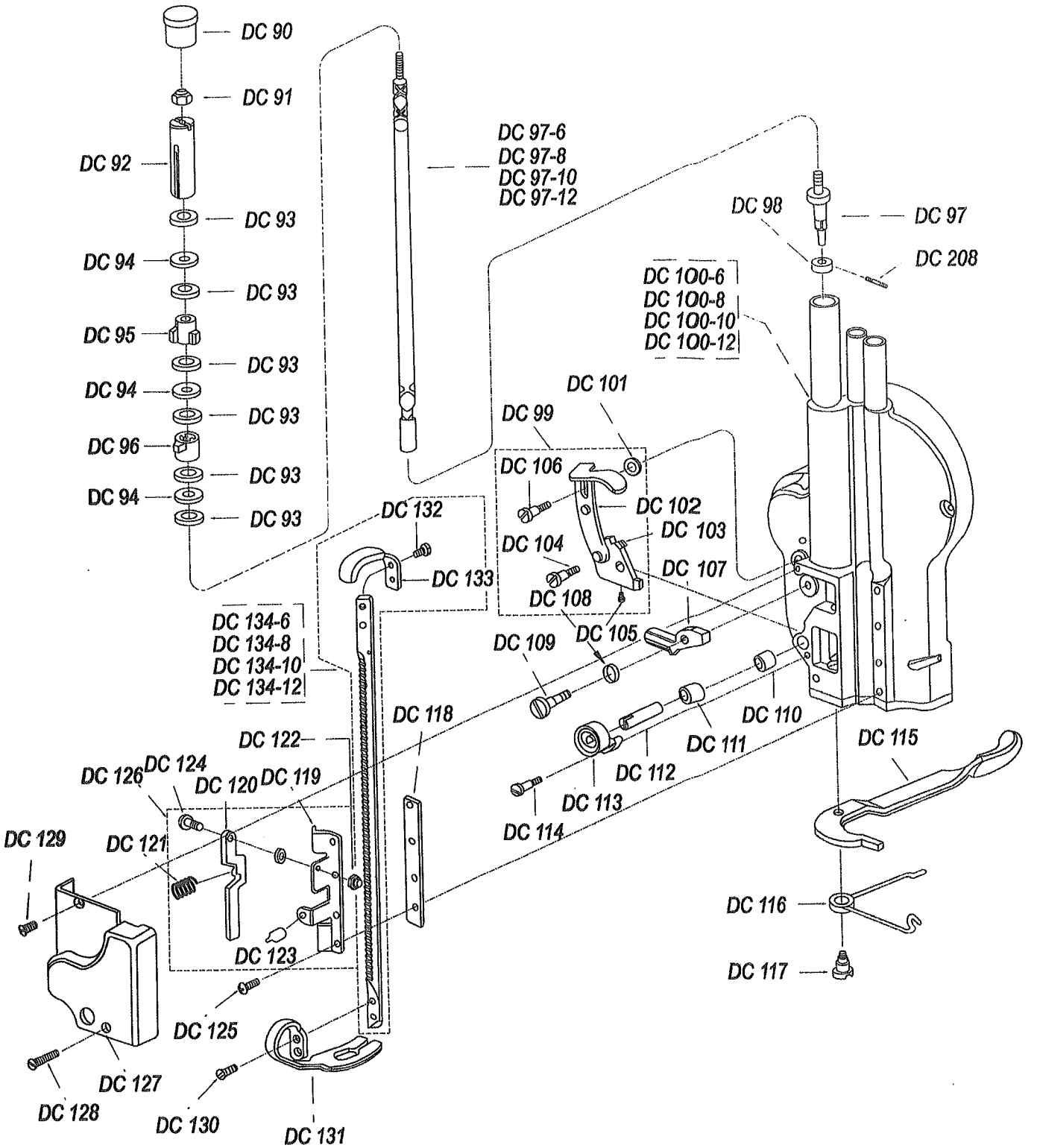
DC 90
DC 91
DC 92
DC 93
DC 94
DC 93
DC 95
DC 93
DC 94
DC 93
DC 96
DC 93
DC 94
DC 93
DC 97-6
DC 97-8
DC 97-10
DC 97-12
DC 98
DC 97
DC 208
DC 100-6
DC 100-8
DC 100-10
DC 100-12
DC 101
DC 99
DC 106
DC 102
DC 103
DC 104
DC 107
DC 108
DC 105
DC 109
DC 132
DC 133
DC 134-6
DC 134-8
DC 134-10
DC 134-12
DC 118
DC 122
DC 126
DC 124
DC 120
DC 119
DC 129
DC 121
DC 123
DC 125
DC 127
DC 128
DC 130
DC 131
DC 110
DC 111
DC 112
DC 113
DC 114
DC 115
DC 116
DC 117

磨刀器组
背面 *Back*
Front Sharpener Housing Assembly

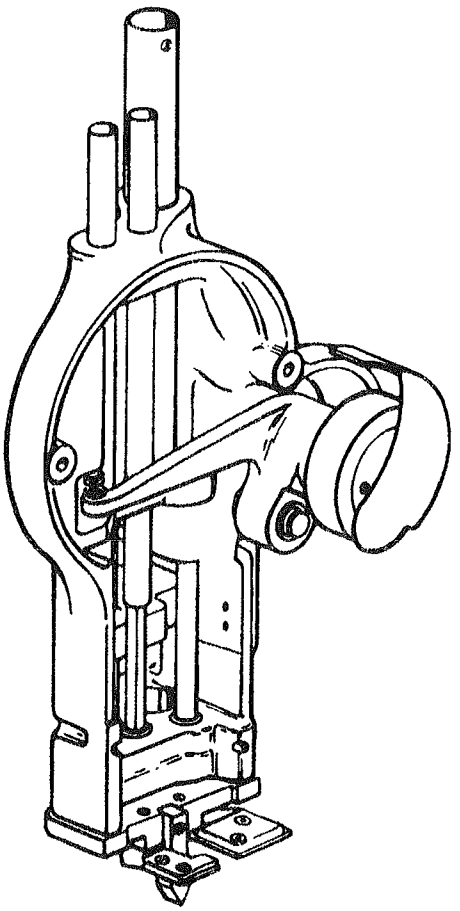

零件号 Part N0.	名 称	Description	数 量 No.Req'd
DC135	随动螺母	R..H.Follower Nut	1
DC136	随动左螺母	L.H.Follower Nut	1
DC137	方导杆	Square Shaft	1
DC138	方导杆	Square Shaft	1
DC139	方导管套	Tube for Square Shaft	2
DC140	丝杆管套	Tube for Screw Shaft	1
DC141	磨刀机匣	Sharpener Housing	1
DC142	斜齿轮芯轴	Shaft for Grank	1
DC143	斜齿轮	Idler Gear	1
DC144	斜齿轮轴	Gear and Shaft	1
DC145	斜齿轮传动机匣	Bell Grank	1
DC146	单列向心球轴承	Ball Bearing for Grank	2
DC147	斜齿轮轴衬圈	Spacer for Bell Bearings	1
DC148	孔用弹性挡圈	Retaining Ring for Bell Crank	1
DC149	摩擦轮组件	Drive Pulley with Driver	1
DC150	斜齿轮芯轴衬套	Bearing for Bell Grank	1
DC151	垫片	Washer for Shaft	1
DC152	轴用弹性挡圈	Retaining Ring for Shaft	1
DC153	顶针	Pin for Bell Grank	1
DC154	挡片	Plate	1
DC155	螺钉	Screw	2
DC156	斜轮传动杆上轴衬	Bearing for Drive Shaft	1
DC157	15牙斜齿轮垫圈	Thrust washer 15	2
DC158	15牙斜齿轮	Spiral Gear 15	1
DC159	齿轮传动杆中轴衬	Bearing for Drive Shaft	1
DC160	键	Key	1
DC161	齿轮传动杆下轴衬	Bearing for Drive Shaft	1
DC162	齿轮传动杆	Driver shaft with Gear	1
DC163	六角扁螺母	Lock Nut for Shaft	1
DC164	推杆挡桩	Pin for Sharpener Housing	1
DC165	支撑弹簧	Spring for Bell Grank	1
DC166	20牙齿轮轴衬	Bearing for Gears 20	2
DC167	20牙齿轮	Spur Gear 20	1
DC168	底板座垫圈	Thrust Washer for Bottom Plate	2
DC169	20牙齿轮	Spur Gear 20	1
DC170	推杆	Push Rod	1
DC171	推杆定位销	Roll for Push Rod	1
DC172	丝杆轴套	Bearing for Screw Shaft	1
DC173	磨刀机匣底板	Bottom Plate	1
DC174	磨刀机匣底板螺钉	Screw	3
DC175	油垫座	Oil Pad and Holder	1
DC176	油垫座螺钉	Screw	2
DC177	分隔块	Spreader Pin	1
DC178	分隔块螺钉	Screw	1
DC179	油垫座左右垫毡	H.Oil Pad	1
DC180	空心铜铆钉	Rivet	4

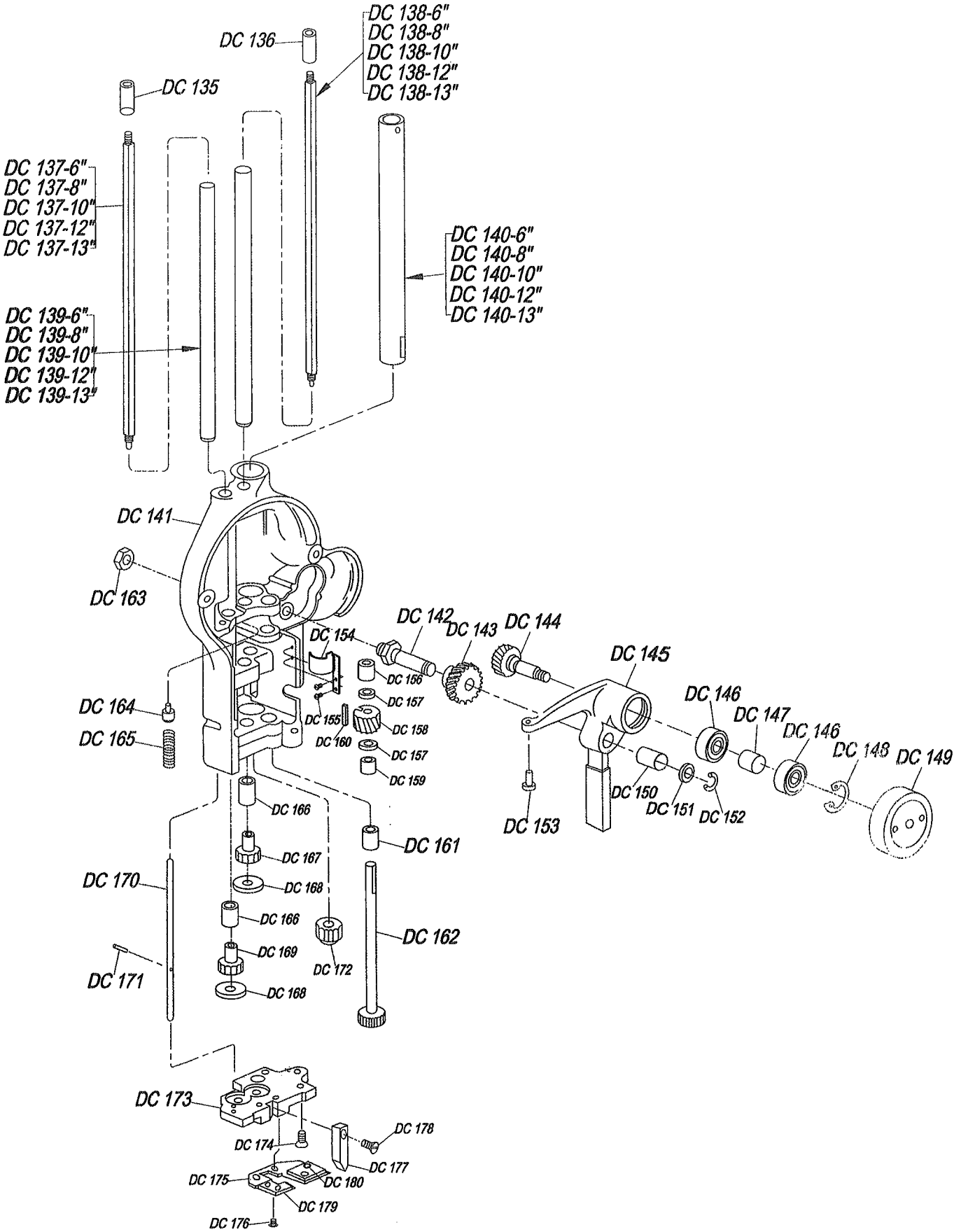
DC 136
DC 138-6"
DC 138-8"
DC 138-10"
DC 138-12"
DC 138-13"
DC 135
DC 137-6"
DC 137-8"
DC 137-10"
DC 137-12"
DC 137-13"
DC 140-6"
DC 140-8"
DC 140-10"
DC 140-12"
DC 140-13"
DC 139-6"
DC 139-8"
DC 139-10"
DC 139-12"
DC 139-13"
DC 141
DC 163
DC 142
DC 143
DC 144
DC 154
DC 145
DC 146
DC 147
DC 146
DC 148
DC 149
DC 156
DC 157
DC 164
DC 155
DC 158
DC 165
DC 160
DC 157
DC 159
DC 150
DC 151
DC 152
DC 153
DC 166
DC 161
DC 167
DC 170
DC 168
DC 166
DC 162
DC 169
DC 172
DC 171
DC 168
DC 173
DC 178
DC 174
DC 177
DC 175
DC 180
DC 179
DC 176

下齿轮托架组
Lower Gear Bracket Assembly

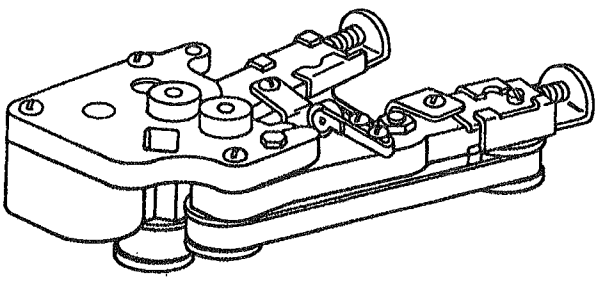

零件号 Part N0.	名 称	Description	数 量 No.Req'd
DC181	牙齿轮轴	L.H.Shaft Extension8	1
DC182	滑轮轴	RH.Shaft Extension	1
DC183	磨刀架盖板螺钉	Adjusting Screw	1
DC184	半圆头螺钉	Screw	1
DC185	半圆头螺钉	Screw	3
DC186	磨刀架盖板	Gear Cover	1
DC187	挡片螺钉	Screw	2
DC188	挡片	Guide Back of Shandard	1
DC189	夹紧臂弹簧	Spring for Arm	1
DC190	夹紧臂	Clamping Arm for Shoe	1
DC191	夹紧臂螺钉	Screw for Clamping Arm	1
DC192	紧定滚轮螺钉	Screw	4
DC193	紧定滚轮组件	Stabilizer	2
DC194	六角螺母	Nut for Sharpener Shoe Screw	2
DC195	圆柱头螺钉	Screw.#4-36x3/16Fillister head	2
DC196	双联齿轮	Intermediate Gear	1
DC197	磨刀架	Lower Gear Bracket with Cover	1
DC198	耐磨板	Wear Plate	2
DC199	滑动小轮弹簧	Sping for Pulleyslide	2
DC200	轴承式左滑动小轮组件	R.H.Slide with Pulley	1
DC201	轴承式右滑动小轮组件	Slide with Pulley	1
DC202	24牙齿轮	Gear on Screw Shaft 24	1
DC203	平端紧定螺钉	Grease Plug	1
DC204	双向丝杆衬套	Bearing for Screw Shaft	1
DC205	双联齿轮衬套	Bearing for Intermediate Gear	1
DC206	传动小轮衬套	Bearing for Shaft Extension	2
DC207	传动小轮	Front Pulley for Belt	1
DC208	弹性圆柱销	Roll Pin	2
DC209	传动小轮橡胶套	Neoprene Band for Pulley	2
DC210	右磨刀垫	R.H.Pre-set Sharpener Shoe(only)	1
DC211	左磨刀垫	L.H.Pre-set Sharpener Shoe(only)	1
DC212	磨刀垫螺钉垫片	Washer	4
DC213	右磨刀垫组件	R.H.Pre-set Sharpener Shoe	1
DC214	左磨刀垫组件	L.H.Pre-set Sharpener Shoe	1
DC215	磨刀垫螺钉衬套	Bushing for Sharpener Shoe	2
DC216	右弹簧	R.H. Sharpener Shoe Spring	1
DC217	左弹簧	L.H. Sharpener Shoe Spring	1
DC218	磨刀垫螺钉	Screw for Sharpener Shoe	2
DC219	内六角锥端紧定螺钉	Shon Screw	1
DC220	小六角较扁母	Jam Nut	1
DC221	砂带	Belt	2

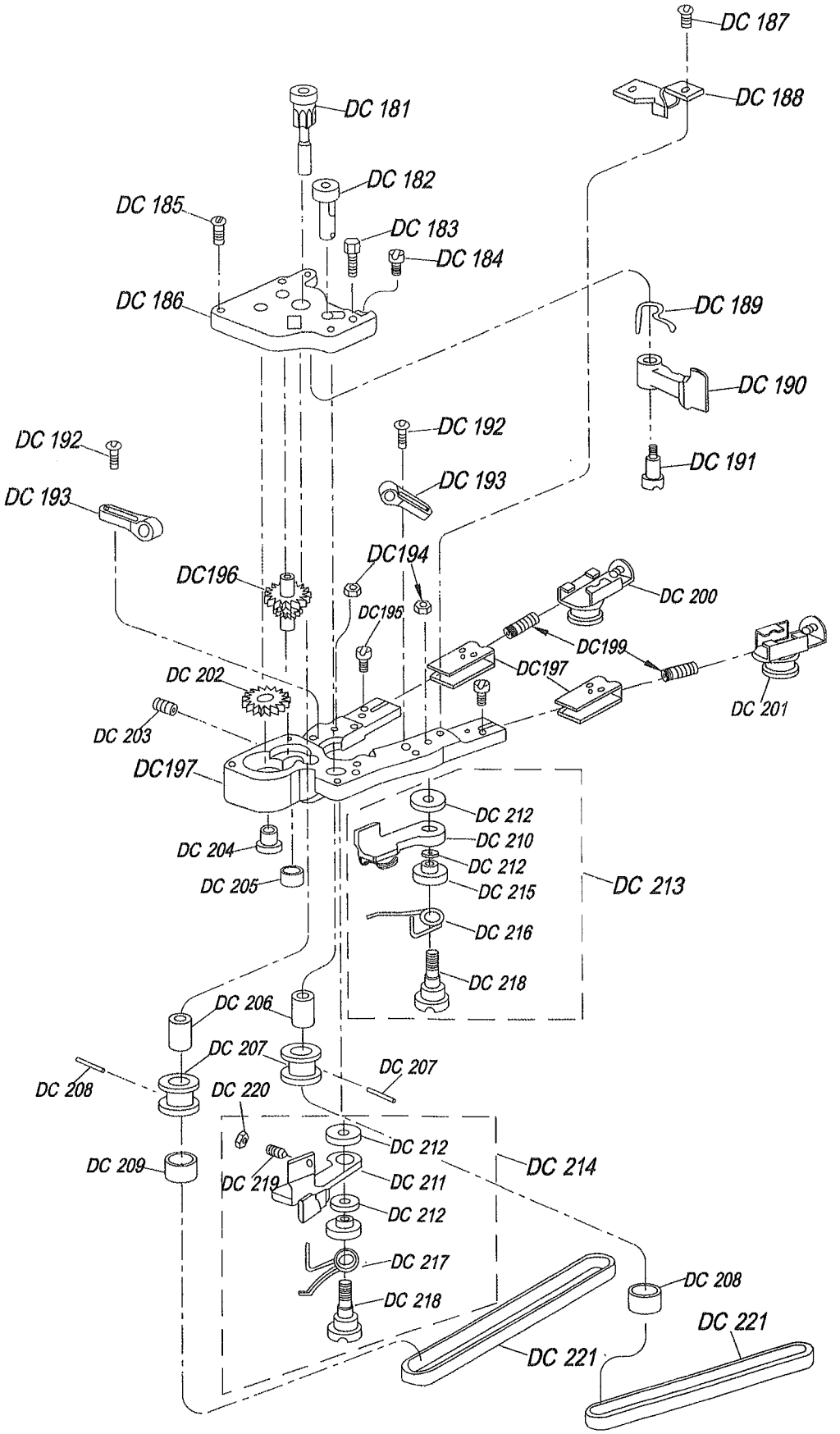
DC 187
DC 188
DC 181
DC 182
DC 185
DC 183
DC 184
DC 186
DC 189
DC 190
DC 192
DC 192
DC 191
DC 193
DC 193
DC194
DC196
DC 200
DC195
DC199
DC197
DC 202
DC 201
DC 203
DC197
DC 212
DC 210
DC 204
DC 212
DC 205
DC 215
DC 213
DC 216
DC 218
DC 206
DC 207
DC 207
DC 208
DC 220
DC 212
DC 214
DC 209
DC 219
DC 211
DC 212
DC 217
DC 208
DC 218
DC 221
DC 221

感谢您的支持！

我们将竭诚为您服务！

提供最好的产品和用户体验！