NISEN 尼森

PARTS BOOK

*注意：由于产品改进，本手册内容可能会与实际购买的产品有所不同，详情请咨询当地经销商。

SP-430GA
SP-438GA

零件手册
PARTS BOOK

在使用机器之前请阅读本零件手册。
请将本零件手册放在便于查阅的地方保管。
Please read this parts book before using the machine.
Please keep this parts book within easy reach for quick reference.

直接驱动式电脑平缝打结机 [SP-430GA]

ELECTRONIC DIRECT DRIVE LOCKSTITCH BAR TACKER [SP-430GA]

直接驱动式电脑平缝钉扣机 [SP-438GA]

ELECTRONIC DIRECT DRIVE LOCKSTITCH BUTTON SEWER [SP-438GA]

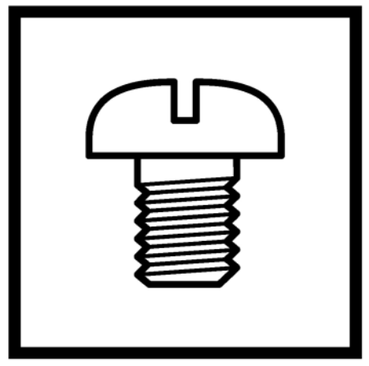

舒普智能技术股份有限公司
SUPREME INTELLIGENT TECHNOLOGY CO., LTD.
浙江宁波鄞州区金谷北路 219 号
Add：NO.219, North Jingu Rd, Ningbo 315100, China.

目　　录

A. 机体部分…… 1
B. 上轴・针杆装置…… 3
C. 送料装置…… 5
D. 抬压装置…… 9
E. 钮夹・作动装置…… 11
F. 下轴装置…… 13
G. 供油润滑装置…… 15
H. 穿线装置…… 17
J. 卷线装置…… 19
K. 切线装置…… 21
L. 扫线装置…… 25
M. 系线装置…… 27
N. 夹线装置…… 29
P1. 控制箱装置…… 31
P2. 控制箱装置（电源基板）…… 33
Q. 开关装置…… 35
R. 电气部品装置…… 37
S. 操作盘装置…… 39
T. 马达装置…… 41
U. 踏板关系…… 43
V1. 辅助装置（用于SP-438GA的选购零部件）…… 45
Z. 附件…… 47
Sp. 不同规格零部件一览表…… 51
Ga. 工模具一览表…… 53
索引…… 56

CONTENTS

A. Machine body..... 1
B. Upper shaft and needle bar mechanism..... 3
C. Feed mechanism..... 5
D. Work clamp lifter mechanism..... 9
E. Button clamp mechanism..... 11
F. Lower shaft mechanism..... 13
G. Lubrication..... 15
H. Threading mechanism..... 17
J. Bobbin winder mechanism..... 19
K. Thread trimmer mechanism..... 21
L. Thread wiper mechanism..... 25
M. Tension release mechanism..... 27
N. Thread nipper mechanism..... 29
P1. Control box mechanism..... 31
P2. Control box (PCB) mechanism..... 33
Q. Power switch mechanism..... 35
R. Power supply equipment mechanism..... 37
S. Operation panel mechanism..... 39
T. Motor mechanism..... 41
U. Foot switch pedal mechanism..... 43
V1. Auxiliary device (Option parts for SP-438GA)..... 45
Z. Accessories..... 47
Sp. Different parts list..... 51
Ga. Gauge parts list..... 53
Index..... 56

A . 机体部分 / Machine body

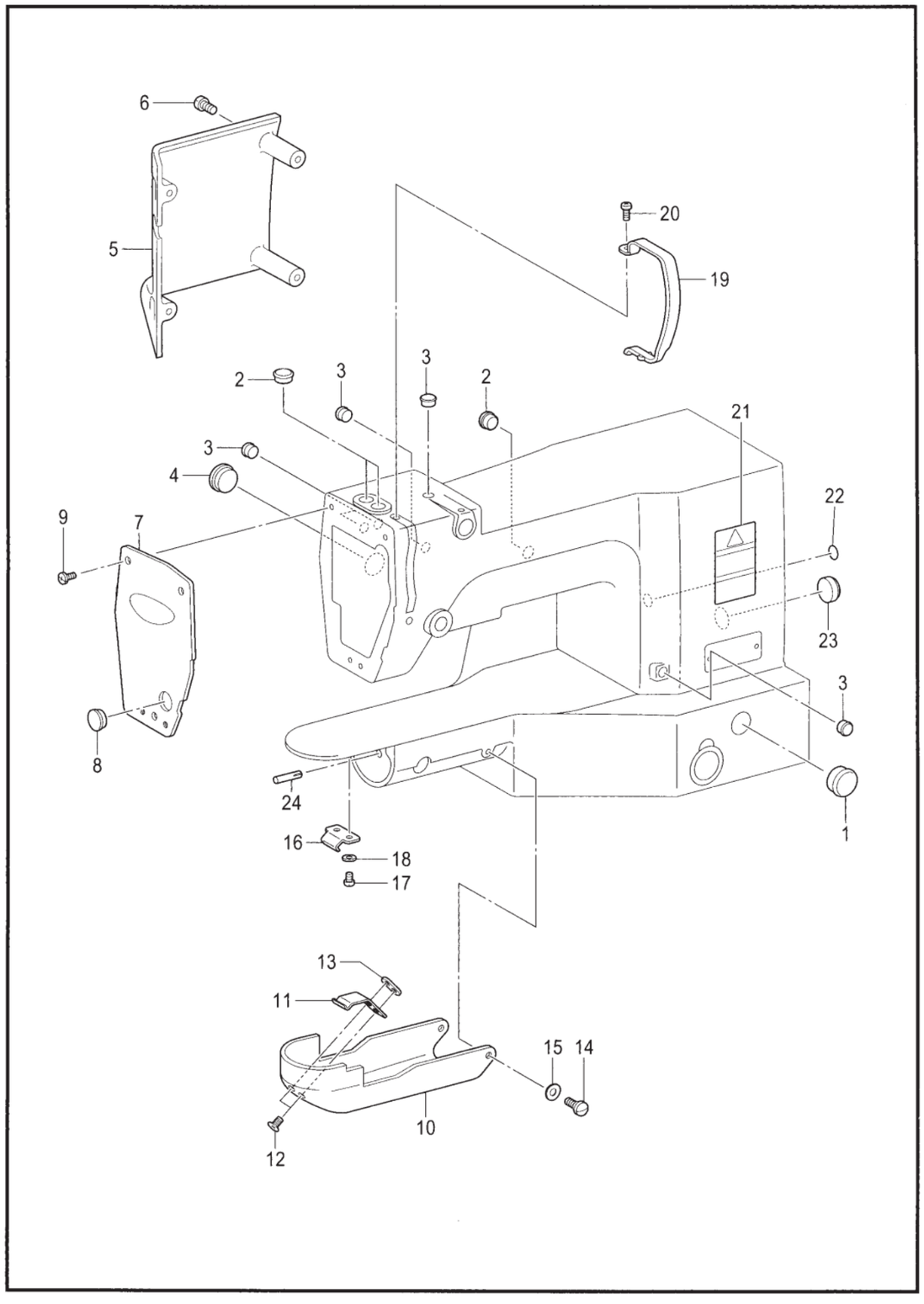

A. 机体部分 / Machine body

参照号	零部件序号	数量	零部件名称	NAME OF PARTS	RM
1	C140392009	1	油盖	OIL CAP	
2	C117934001	3	橡皮塞 13.5	RUBBER CAP, 13.5	
3	C104821001	5	橡皮塞 10.5	RUBBER CAP, 10.5	
4	C140392009	1	油盖	OIL CAP	
5	CSA3260001	1	侧面盖板	FRAME SIDE COVER	
6	C062061016	4	螺钉 M6X10	SCREW, PAN M6X10	
7	CSA3199001	1	主面板	FACE PLATE	
8	C104449001	1	橡皮塞 15.5	RUBBER CAP, 15.5	
9	C062501016	3	螺钉 M5X10	SCREW, PAN M5X10	
10	CSA3262101	1	大旋梭盖	SHUTTLE RACE COVER	
11	CSA3263001	1	大旋梭盖钩 D	SHUTTLE RACE COVER HOOK D	
12	C004300513	2	螺钉 M3X5	SCREW, FLAT M3X5	
13	CSA3264001	1	板螺母	NUT PLATE	
14	CSA3265001	2	段螺钉 8-2	SHOULDER SCREW,8-2	
15	C109239002	2	弹簧垫圈	WASHER, WAVE SPRING	
16	CSA3266001	1	大旋梭盖钩 U	SHUTTLE RACE COVER HOOK U	
17	C062300416	2	螺钉 M3X4	SCREW, PAN M3X4	
18	C025030236	2	平垫圈 M3	WASHER, PLAIN M 3	
19	CSA3200101	1	挑线杆防护罩	THREAD TAKE-UP COVER	
20	C062401006	1	螺钉 M4X10	SCREW, PAN M4X10	
21	CSA2040001	1	操作注意标签(中 / 英)	LABEL, CAUTION CHN/ENG	
22	CS37060001	1	接地标记	LABEL, GROUNDING	
23	CS28044001	1	橡皮塞 20.8	RUBBER CAP, 20.8	
24	C117608001	1	开口销	DOWEL PIN	

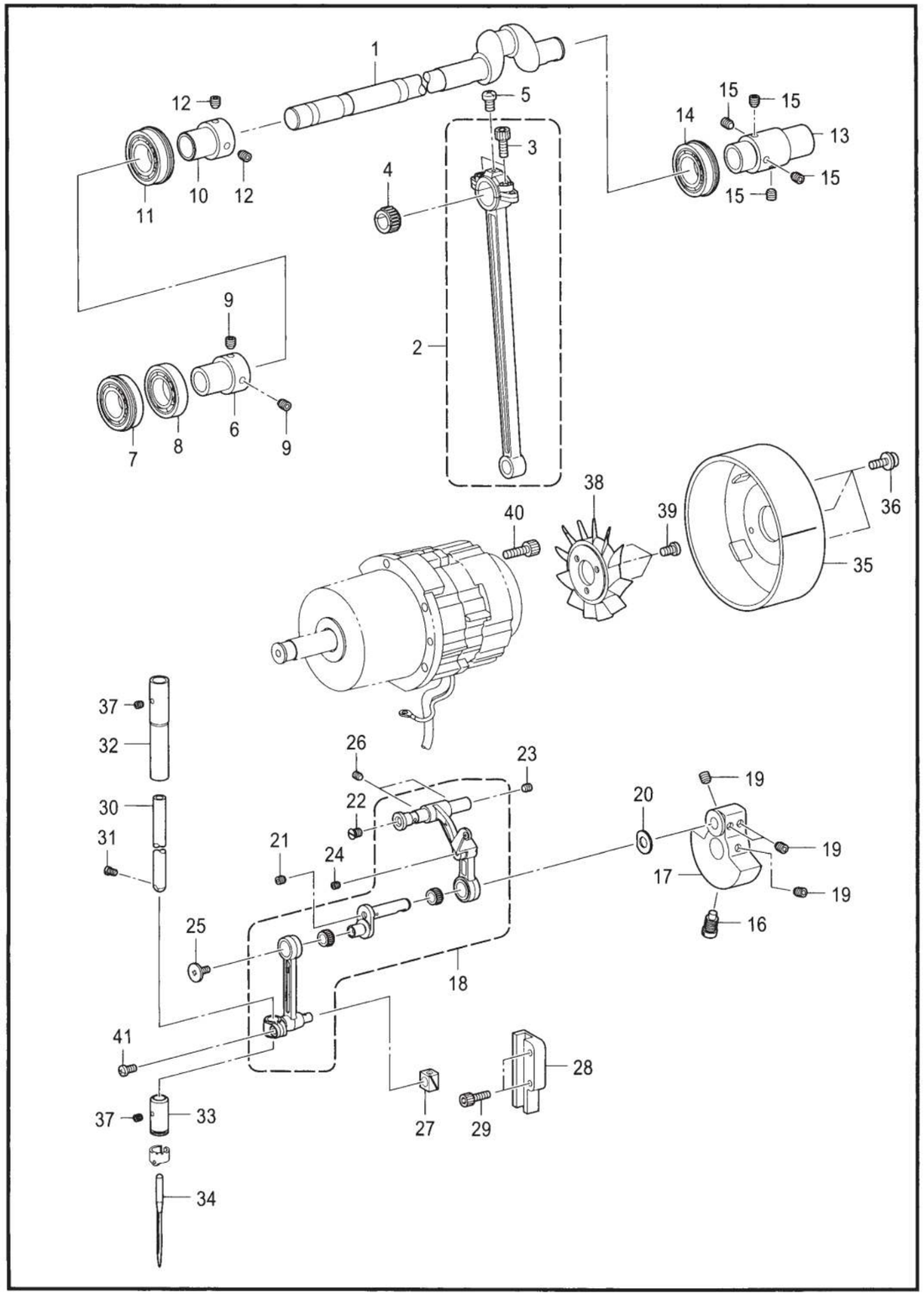

参照号	零部件序号	数量	零部件名称	NAME OF PARTS	RM
1	CSA3201001	1	上轴	UPPER SHUFT	
2	CSA3499001	1	曲柄轴组件	CRANK ROD ASSY	
3	C 018501636	2	螺栓 M5X16	BOLT, SOCKET M5X16	
4	CSA4172001	1	滚针轴承	NEEDLE BEARING	
4	CSA4173001	1	滚针轴承	NEEDLE BEARING	
4	CSA4174001	1	滚针轴承	NEEDLE BEARING	
4	CSA4175001	1	滚针轴承	NEEDLE BEARING	
5	C 062300416	1	螺钉 M3X4	SCREW, PAN M3X4	
6	CSA3206001	1	轴承套	BALL BEARING BUSH	
7	CSA4179001	1	轴承 6904DDUNR	BALL BEARINH,6904DDUNR	
8	CSA4180001	1	轴承 R-6904DDU	BALL BEARING, RADIAL 6904DDU	
9	CS23651001	2	固定螺钉 M6X6	SET SCREW, SOCKET (FT) M6X6	
10	CSA3206001	1	轴承套	BALL BEARING BUSH	
11	CSA4177001	1	轴承 6004DDUNR	BALL BEARING, 6004DDUNR	
12	CS23651001	2	固定螺钉 M6X6	SET SCREW, SOCKET (FT) M6X6	
			＜用于 430D＞	<For 430D>	
13	CSA3210001	1	管接头 A	JOINT.A	
			＜用于 438D＞	<For 438D>	
13	CSA3589001	1	管接头 B	JOINT,B	
14	CSA4178001	1	轴承 6204DDUNR	BALL BEARING 6204DDUNR	
15	CS23651001	4	固定螺钉 M6X6	SET SCREW, SOCKET (FT) M6X6	
16	CS25235001	1	螺钉 M8	SCREW, M8	
			＜用于 430D＞	<For 430D>	
17	CSA3497001	1	曲柄 C	THREAD TAKE-UP CRANK,C	
18	CSA6563001	1	针杆连杆组件 A	THREAD TAKE-UP LEVER,A SET	
			＜用于 438D＞	<For 438D>	
17	CSA3591001	1	平衡曲柄 B	THREAD TAKE-UP CRANK,B	
18	CSA4327001	1	针杆连杆组件 B	THREAD TAKE-UP REVER,B SET	
19	CS23651001	4	固定螺钉 M6X6	SET SCREW, SOCKET (FT) M6X6	
20	C 110367001	1	垫圈 8	WASHER, PLAIN SPECIAL 8	
21	C 012300336	1	螺钉 M3X3	SET SCREW, SOCKET (FT) M3X3	
22	CSA2958001	1	螺钉 M5X6	SCREW, FLAT M5X6	
23	C 012500536	1	螺钉 M5X5	SET SCREW, SOCKET (FT) M5X5	
24	C 012300336	1	螺钉 M3X3	SET SCREW, SOCKET (FT) M3X3	
25	C 145465001	1	螺钉 SM3.57-40X6L	SCREW, SM3.57-40X6 L	
26	C 012060636	2	螺钉 M6X6	SET SCREW, SOCKET (FT) M6X6	
27	CSA3488001	1	滑块	SLIDE BLOCK	
28	CSA3528001	1	滑块导向 B	SLIDE BLOCK GUIDE	
29	C 018401636	2	螺栓 M4X16	BOLT, SOCKET M4X16	
30	CSA3222001	1	针杆 A	NEEDLE BAR,A	
31	C 144458001	1	螺钉 SM3.57-40X4.5	SET SCREW, SM3.57-40X4.5	
32	CSA3223001	1	针杆轴套 U	NEEDLE BAR BUSH,U	
33	CSA3224001	1	针杆轴套 D	NEEDLE BAR BUSH,D	
34	C* P. 54	1	机针	NEEDLE	
35	CSA3225101	1	上轮	PULLEY	
36	CSA3025001	3	螺栓(带垫圈) M4X10DA	SCREW,PAN(S/P WASHER)M4X10	
37	C 012500536	2	螺钉 M5X5	SET SCREW, SOCKET (FT) M5X5	
38	CS38713100	1	叶轮	FAN	
39	C 062400806	3	螺钉 M4X8	SCREW, PAN M4X8	
40	C 018501636	4	螺栓 M5X16	BOLT, SOCKET M5X16	
41	C 062400816	1	螺钉 M4X8	SCREW,PAN M4X8	

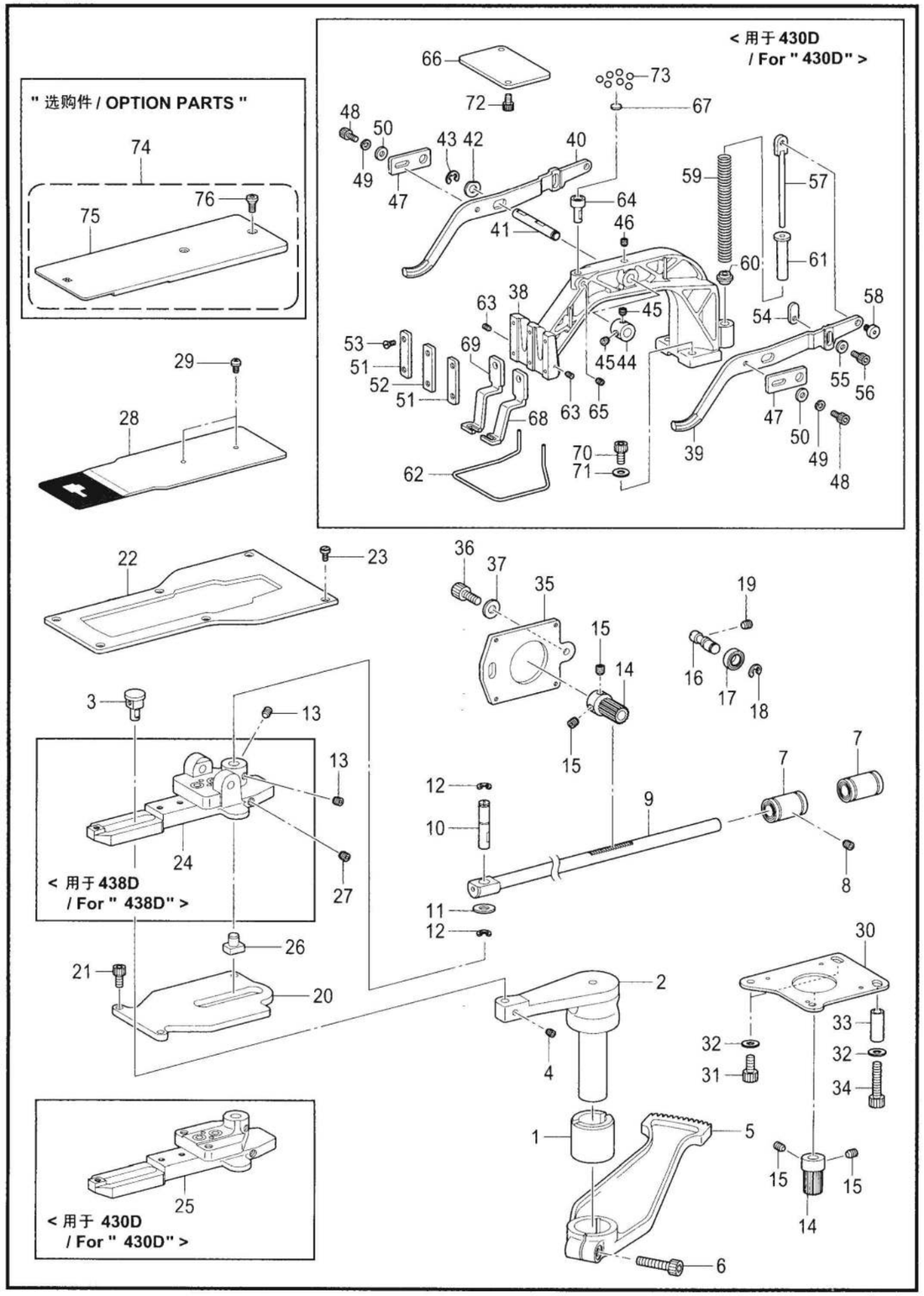

参照号	零部件序号	数量	零部件名称	NAME OF PARTS	RM
1	CSA3363001	1	送料杆轴套 (X)	X-FEED LEVER BUSH	
2	CSA3364001	1	送料杆 (X)	X-FEED LEVER	
3	CSA3533001	1	送料杆滑块组件 (X)	T-LENGTH REGURATOR BLOCK ASSY	
4	C012500536	1	螺钉 M5X5	SET SCREW, SOCKET (FT) M5X5	
5	CSA3366001	1	送料齿轮 (X)	X-FEED GEAR	
6	C018063036	1	螺栓 M6X30	BOLT, SOCKET M6X30	
7	CXC5780001	2	轴向轴承 10	BEARING 10 ,LINER	
8	C012060636	2	螺钉 M6X6	SET SCREW, SOCKET (FT) M6X6	
9	CSA3367001	1	齿条轴 (Y)	Y-FEED RACK SHAFT	
10	CSA3368001	1	轴销 (Y)	Y-CONNECTING PIN	
11	C153113001	1	垫圈	THRUST WASHER	
12	C048060342	2	挡圈 E6	RETAINING RING, E6	
13	C012060636	2	螺钉 M6X6	SET SCREW, SOCKET (FT) M6X6	
14	CSA4197001	2	送料齿轮	FEED GEAR	
15	C012060636	4	螺钉 M6X6	SET SCREW, SOCKET (FT) M6X6	
16	CSA3370001	1	偏心轴	ECCENTRIC SHAFT	
17	C070608800	2	R球轴承 608ZZ	BALL BEARING, ARDIAL 608ZZ	
18	C048080142	1	轴用挡圈 C8	RETAINING RING, EXTERNAL C8	
19	C012060636	1	螺钉 M6X6	SET SCREW, SOCKET (FT) M6X6	
20	CSA3371001	1	送料台支板	FEED BAR SUPPORT PLATE	
21	C018401036	3	螺栓 M4X10	BOLT, SOCKET M4X10	
22	CSA3372001	1	送料台盖板	FEED BAR COVER	
23	CSA3538001	6	螺钉 M4X8	SCREW,M4X8	
			＜用于 438D＞	<For 438D>	
24	CSA3604001	1	送料台小组件 B	FEED BAR SUB ASSY B	
			＜用于 430D＞	<For 430D>	
25	CSA3373001	1	送料台小组件 A	FEED BAR SUB ASSY A	
26	CSA3534001	1	送料滑块组件 (Y)	T-WIDTH REGURATOR BROCK ASSY	
27	C012060636	1	螺钉 M6X6	SET SCREW, SOCKET (FT) M6X6	
28	C* P. 54	1	送料板	FEED PLATE	
29	C153057101	2	螺钉 SM4.37	SCREW, ROUND W/SOCKET SM4.37	
30	CSA3381001	1	马达安装板 (X)	X-MOTOR SETTING PLATE	
31	C018061236	2	螺栓 M6X12	BOLT, SOCKET M6X12	
32	C025060236	3	平垫圈 M6	WASHER, PLAIN M 6	
33	CSA3708001	1	套筒	COLLAR	
34	C018063536	1	螺栓 M6X35	BOLT,SOCKET M6X35	
35	CSA3382001	1	马达安装板 (Y)	Y-MOTOR SETTING PLATE	
36	C018061236	2	螺栓 M6X12	BOLT, SOCKET M6X12	
37	C025060236	2	平垫圈 M6	WASHER, PLAIN M 6	
			＜用于 430D＞	<For 430D>	
38	CSA3419001	1	压脚臂	WORK CLAMP ARM	
39	CSA3420001	1	QC压脚臂杆 R	WORK CLAMP ARM LEVER,R	
40	CSA3421001	1	QC压脚臂杆 L	WORK CLAMP ARM LEVER,L	
41	CSA3422001	1	QC压脚臂杆轴	WORK CLAMP ARM LEVER SHAFT	
42	C110367001	1	垫圈 8	WASHER, PLAIN SPECIAL 8	
43	C048060346	1	挡圈 E6	RETAINING RING, E6	
44	CSA3231001	1	紧圈 B	SET SCREW COLLAR,B	
45	C012060536	2	螺钉 M6X5	SET SCREW, SOCKET (FT) M6X5	
46	C012500536	1	螺钉 M5X5	SET SCREW, SOCKET (FT) M5X5	
47	CSA3423001	2	QC杆轴支架	WORK CLAMP LEVER SUPPORT	
48	C018500836	2	螺栓 M5X8	BOLT, SOCKET M5X8	
49	C028050246	2	弹簧垫圈 2-5	WASHER, SPRING 2-5	
50	C025050236	2	平垫圈 M5	WASHER, PLAIN M 5	
51	CSA3424001	2	压脚压板 A	WORK CLAMP GUIDE BRACKET,A	
52	CSA3425001	1	压脚压板 B	WORK CLAMP GUIDE BRACKET,B	
53	CSA3426001	6	螺钉 M3.5	SCREW,FLAT M3.5	
54	CSA3208201	2	压脚高度调节板	WORK CLAMP ARM LEVER PLATE	
55	C146354002	2	垫圈 5	WASHER, PLAIN 5	
56	C018500836	2	螺栓 M5X8	BOLT, SOCKET M5X8	
57	CSA3427101	2	弹簧导向杆	SPRING GUIDE ROD	

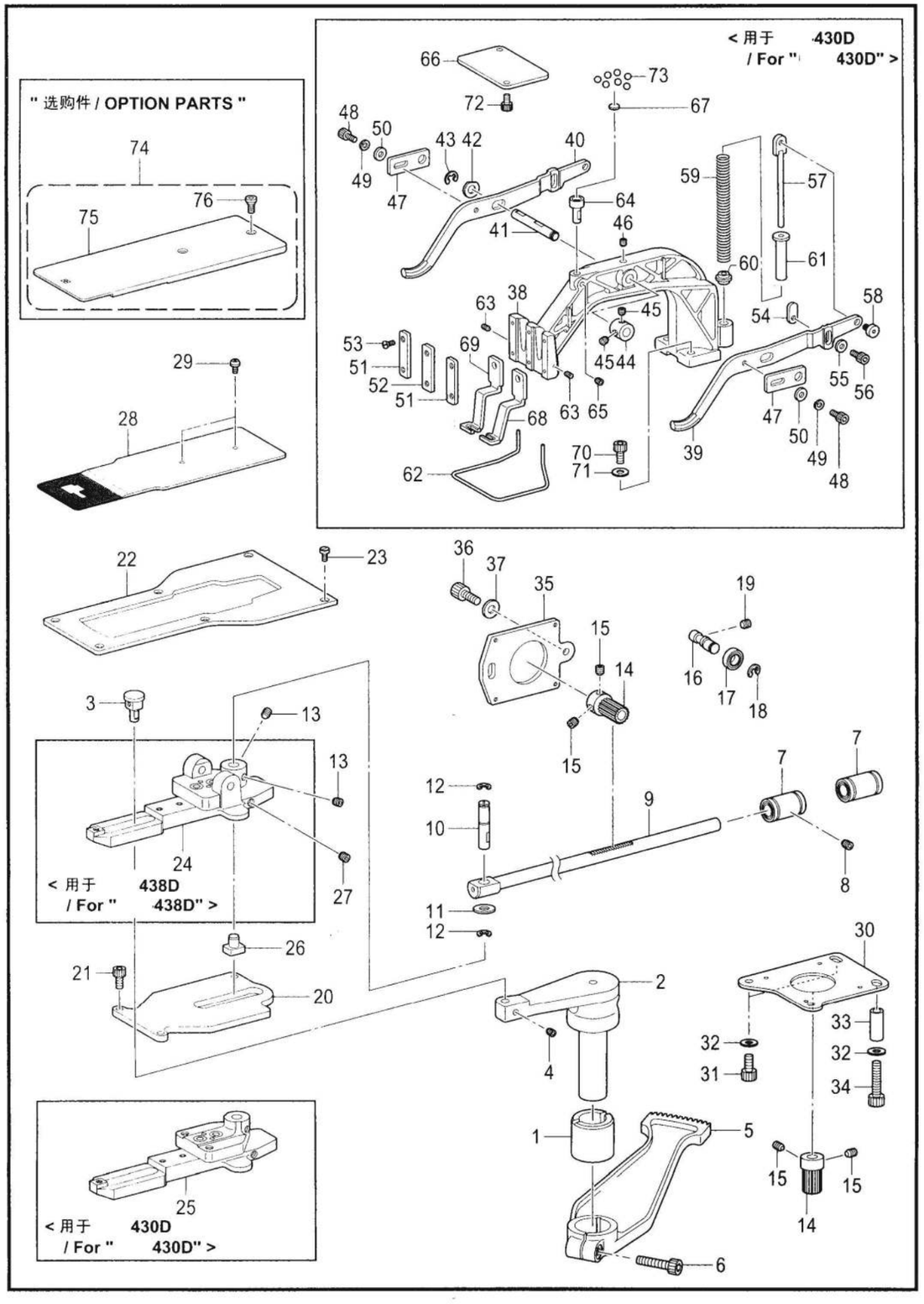

参照号	零部件序号	数量	零部件名称	NAME OF PARTS	RM
			＜用于 430D＞	<For 430D>	
58	CSA1179002	2	螺钉 M5	SHOULDER SCREW, M5	
59	C153568001	2	弹簧 A	PRESSER SPRING, A	
60	C152788000	2	弹簧座圈	PRESSER SPRING SPACER	
61	C153567000	2	弹簧导柱	PRESSER SPRING COLLAR	
62	CSA4130001	1	护指器	FINGER GUARD	
63	CSA2626001	2	螺钉 M3.5	SET SCREW, (CP) M3.5	
64	CSA3428001	1	压脚臂短轴	SUPPORT SHAFT,W-CLAMP	
65	C012500536	1	螺钉 M5X5	SET SCREW, SOCKET (FT) M5X5	
66	CSA3487001	1	压脚臂支板	WORK CLAMP ARM SUPPORT PLATE	
67	CSA4145001	1	垫片	SPACER,W-CLAMP	
68	C* P. 54	1	压脚 R	WORK CLAMP, RIGHT	
69	C* P. 54	1	压脚 L	WORK CLAMP, LEFT	
70	C018061636	2	螺栓 M6X16	BOLT, SOCKET M6X16	
71	C025060236	2	平垫圈 M6	WASHER, PLAIN M 6	
72	C018400836	2	螺栓 M4X8	BOLT, SOCKET M4X8	
73	C071031840	7	钢球 1/8	BEARING BALL, 1/8	
			＜选购件＞	<Option parts>	
74	CSA4198001	1	原点基准板组件	H-POSITION STSNDARD PLATE,ASSY	
75	CS42903001	1	原点基准板	H-POSITION STSNDARD PLATE	
76	CS49955101	2	螺钉 SM4.37	SCREW,W/SOCKET SM4.37	

D. 抬压装置 / Work clamp lifter mechanism

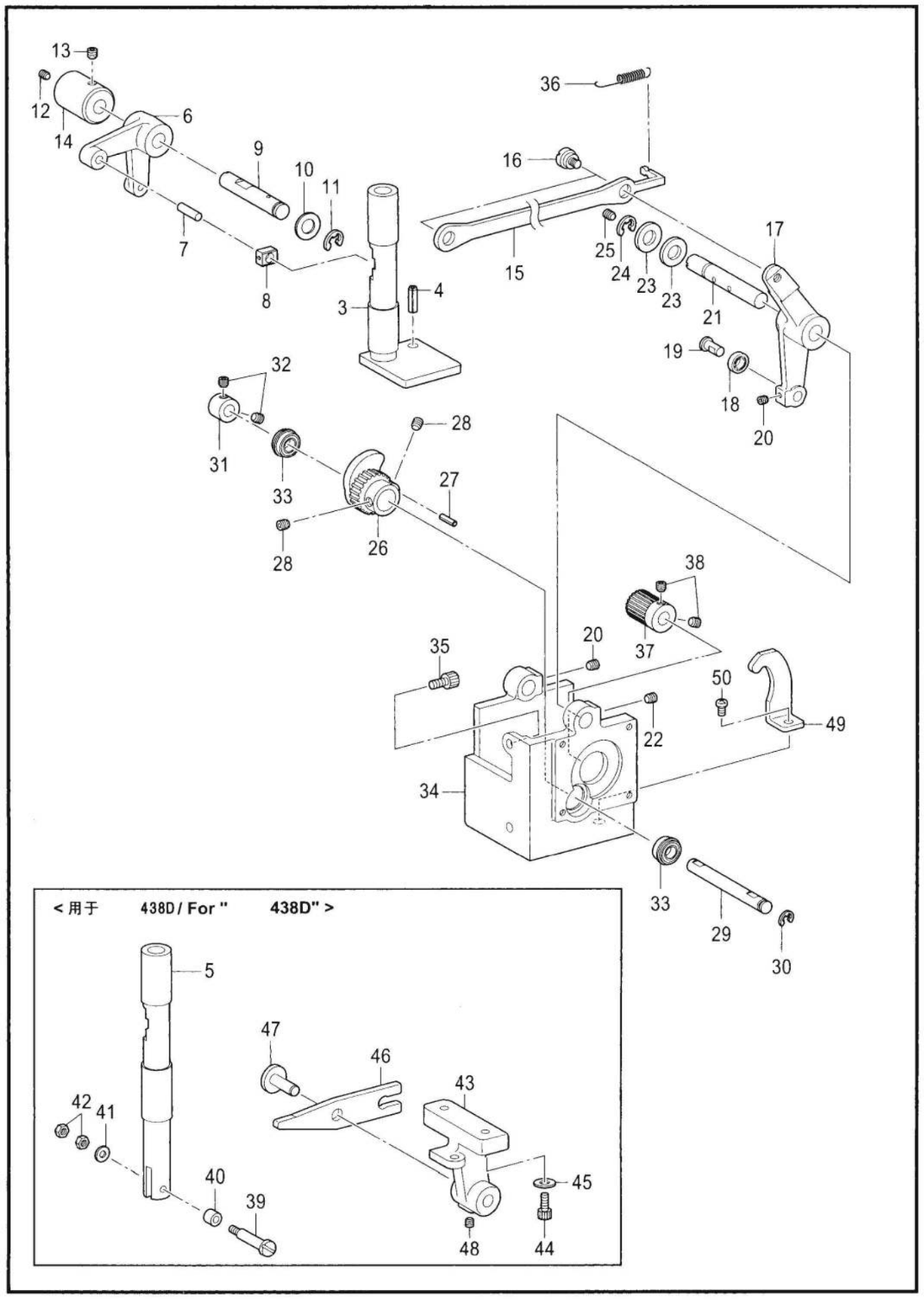

D. 抬压装置 / Work clamp lifter mechanism

参照号	零部件序号	数量	零部件名称	NAME OF PARTS	RM
			＜用于 430D＞	<For 430D >	
3	CSA3432001	1	抬压压脚板	WORK CLAMP LIFTER PLATE	
4	C047602042	1	弹簧销 AW6	PIN, SPRING ROLL AW6	
			＜用于 438D＞	<For 438D >	
5	CSA3628001	1	夹扣杆	BUTTON CLAMP ROD	
6	CSA3434001	1	抬压杆	LIFTER LEVER	
7	C152744001	1	销	PIN	
8	C102630001	1	针杆接头滑块	NEEDLE BAR GUIDE SLIDE BLOCK	
9	CSA3435001	1	抬压杆轴	LEVER SHAFT	
10	CS20356001	1	平垫圈 10	WASHER, PLAIN 10	
11	C048080342	1	挡圈 E8	RETAINING RING, E8	
12	C012500536	1	螺钉 M5X5	SET SCREW, SOCKET (FT) M5X5	
13	C012060636	1	螺钉 M6X6	SET SCREW, SOCKET (FT) M6X6	
14	CSA3436001	1	抬压杆轴套	W-CLAMP LIFTER LEVER BUSH	
15	CSA3437001	1	抬压杆	LINK	
16	CSA3438001	2	段螺钉	LINK SHOULDER SCREW	
17	CSA3439001	1	抬压驱动杆	DRIVE LEVER W-CLAMP LIFTER	
18	C070696800	1	轴承 R-696ZZ	BALL BEARING, RADIAL 696ZZ	
19	CSA3441001	1	抬压滚轮轴	W-CLAMP LIFTER ROLLER SHAFT	
20	C012500536	1	螺钉 M5X5	SET SCREW, SOCKET (FT) M5X5	
21	CSA3442001	1	抬压凸轮杆轴	CAM LEVER SHAFT	
22	C012060636	2	螺钉 M6X6	SET SCREW, SOCKET (FT) M6X6	
23	CS20356001	2	平垫圈 10	WASHER, PLAIN 10	
24	C048080342	1	挡圈 E8	RETAINING RING, E8	
25	C012500536	1	螺钉 M5X5	SET SCREW, SOCKET (FT) M5X5	
26	CSA3443101	1	抬压凸轮齿轮	CAM GEAR	
27	C047301042	1	弹簧销	PIN, SPRING ROLL AW3	
28	C012060636	2	螺钉 M6X6	SET SCREW, SOCKET (FT) M6X6	
29	CSA3444001	1	抬压凸轮轴	CAM SHAFT	
30	C048060346	1	挡圈 E6	RETAINING RING, E6	
31	CSA3231001	1	紧圈 B	SET SCREW COLLAR,B	
32	C012060536	2	螺钉 M6X5	SET SCREW, SOCKET (FT) M6X5	
33	C070688850	2	R球轴承 688ZZ	BALL BEARING, RADIAL 688ZZ	
34	CSA3445001	1	马达底座	MOTOR BRACKET	
35	C018061236	2	螺栓 M6X12	BOLT, SOCKET M6X12	
36	CSA3446001	1	弹簧	SPRING	
37	CSA3707001	1	驱动齿轮 16	GEAR 16	
38	C012060536	2	螺钉 M6X5	SET SCREW, SOCKET (FT) M6X5	
			＜用于 438D＞	<For 438D >	
39	CSA3629001	1	夹扣滚轮轴	BUTTON CLAMP ROLLER SHAFT	
40	C107744001	1	滚轮	ROLLER	
41	C025040236	1	平垫圈 M4	WASHER, PLAIN M 4	
42	C021400216	2	六角螺母 M4	NUT, 2 M4	
43	CSA3630001	1	夹扣手柄支架	BUTTON CLAMP LEVER HOLDER	
44	C018061636	2	螺栓 M6X16	BOLT, SOCKET M6X16	
45	C025060236	2	平垫圈 M6	WASHER, PLAIN M 6	
46	CSA3631001	1	夹扣手柄	BUTTON CLAMP LEVER	
47	C153838001	1	夹扣杆轴	BUTTON CLAMP LEVER SHAFT	
48	C012060636	1	螺钉 M6X6	SET SCREW, SOCKET (FT) M6X6	
49	CSA4072001	1	抬压凸轮止动板	STOPPER	
50	C062061016	1	螺钉 M6X10	SCREW, PAN M6X10	

E . 钮夹 · 作动装置 / Button clamp mechanism

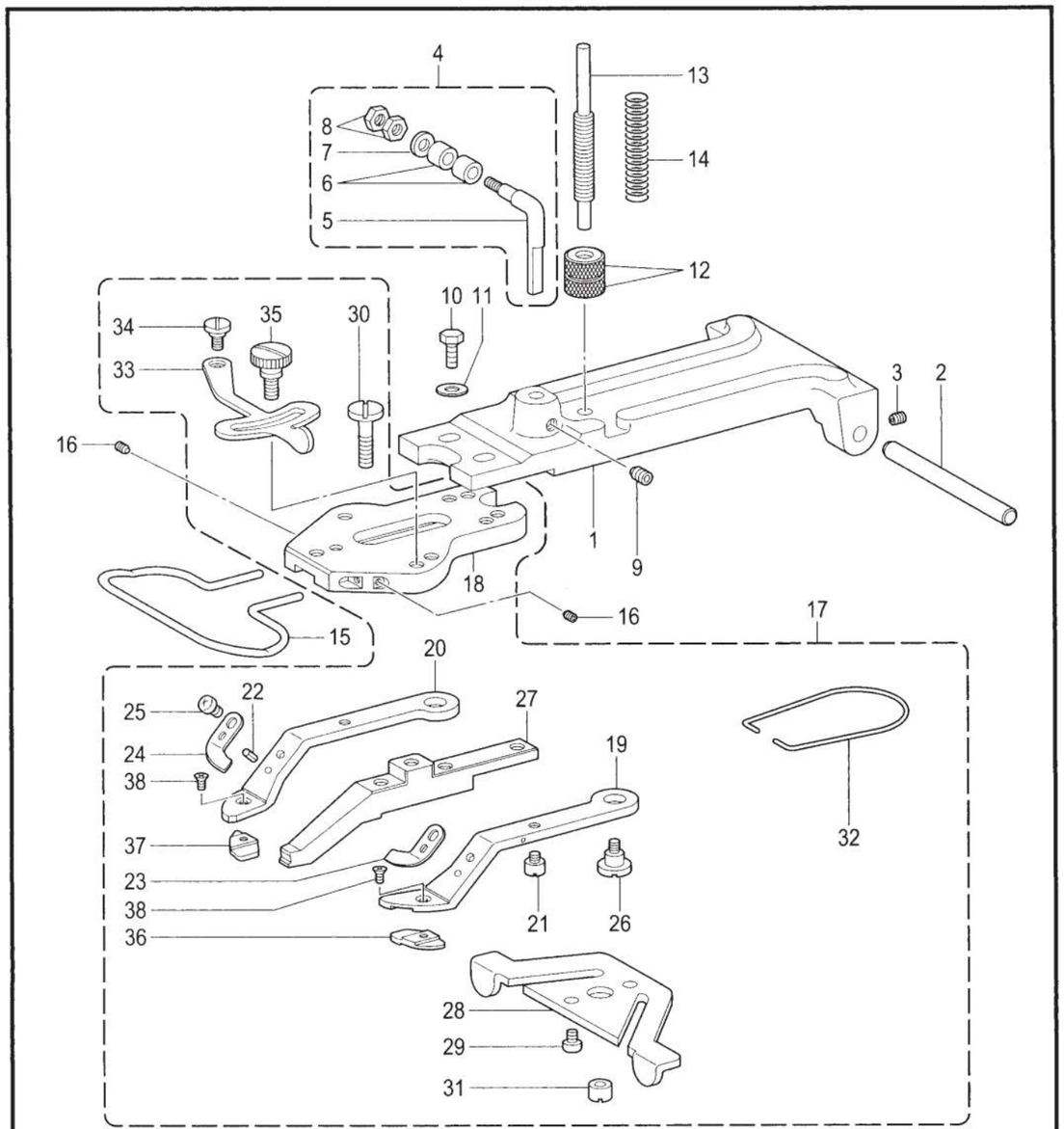

" 选购件 / OPTION PARTS "



E. 钮夹 · 作动装置 / Button clamp mechanism

参照号	零部件序号	数量	零部件名称	NAME OF PARTS	RM
			＜用于 438D＞	<For 438D>	
1	C153830000	1	钮夹支架	BUTTON CLAMP HOLDER	
2	C153827001	1	钮夹支架轴	BUTTON CLAMP HOLDER SHAFT	
3	C014680632	2	螺钉 SM4.37-40X6	SET SCREW, SOCKET SM4.37-40X6	
4	C151968001	1	支架钩组件	BUTTON CLAMP HOLDER HOOK ASSY	
5	C151969001	1	支架钩	B-CLAMP HOLDER HOOK	
6	C107744001	2	滚轮	ROLLER	
7	C153484001	1	垫片 4.76	WASHER, PLAIN 4.76	
8	C105234003	2	螺母 SM4.37	NUT SM4.37	
9	C014760632	1	螺钉 SM5.95-28X6	SET SCREW, SOCKET SM5.95-28X6	
10	C017711412	2	螺栓 SM4.76X14	BOLT, SM4.76-32X14	
11	C146354001	2	垫圈 5	WASHER, PLAIN 5	
12	C146994001	2	调整螺母 SM6.35-40	NUT, ROUND SM6.35-40	
13	C115148201	1	螺钉 SM6.35-40	ADJUSTING SCREW, SM6.35-40	
14	C115147001	1	压簧	COMPRESSION SPRING	
15	CS49998001	1	护指器	FINGER GUARD	
16	C011679312	2	固定螺钉 SM3.57	SET SCREW, (FT) SM3.57	
17	CS59315001	1	钮夹组件 2A	BUTTON CLAMP ASSY, 2A	
18	CS52093001	1	钮夹台	BUTTON CLAMP BASE	
19	CS59316001	1	钮夹 2AL	BUTTON CLAMP, 2AL	
20	CS59317001	1	钮夹 2AR	BUTTON CLAMP, 2AR	
21	C115156001	2	导向销	BUTTON CLAMP GUIDE PIN	
22	C047250642	2	弹簧销 AW2.5	PIN, SPRING ROLL AW2.5	
23	CS59318001	1	钮夹板弹簧	BUTTON CLAMP 2AL PLATE SPRING	
24	CS59319001	1	钮夹板弹簧	BUTTON CLAMP 2AR PLATE SPRING	
25	C062680512	2	螺钉 SM4.37-40X5	SCREW, PAN SM4.37-40X5	
26	C115158001	2	段螺栓 SM4.76	SHOULDER SCREW, SM4.76	
27	CS59320001	1	钮夹 2AM	BUTTTON CLANP, 2AM	
28	CS03659001	1	钮夹调节板凸轮	BUTTON CLAMP PLATE CAM	
29	C062680812	2	螺钉 SM4.37-40X8	SCREW, PAN SM4.37-40X8	
30	CS03468101	1	螺钉 SM4.37	SCREW, SM4.37	
31	CS03657001	1	螺母 SM4.37	NUT, ROUND SM4.37	
32	CS59321001	1	弹簧	SPRING	
33	C115164101	1	钮夹调节板	BUTTON CLAMP ADJUSTING PLATE	
34	C115165001	1	段螺栓 SM4.37	SHOULDER SCREW, SM4.37	
35	C115166001	1	段螺栓 SM4.37	SHOULDER SCREW, SM4.37	
36	CS52072001	1	钮夹垫 BL	BUTTON CLAMP SPACER, BL	
37	CS52076001	1	钮夹垫 BR	BUTTON CLAMP SPACER, BR	
38	CS01694001	2	螺钉 SM2.38X4	SCREW, FLAT SM2.38X4	
			"选购件"	"OPTION PARTS"	
39	CS52071001	1	钮夹垫 AL	BUTTON CLAMP SPACER, AL	
40	CS52075001	1	钮夹垫 AR	BUTTON CLAMP SPACER, AR	
41	CS52072001	1	钮夹垫 BL	BUTTON CLAMP SPACER, BL	
42	CS52076001	1	钮夹垫 BR	BUTTON CLAMP SPACER, BR	
43	CS52073001	1	钮夹垫 CL	BUTTON CLAMP SPACER, CL	
44	CS52077001	1	钮夹垫 CR	BUTTON CLAMP SPACER, CR	
45	CS52074001	1	钮夹垫 DL	BUTTON CLAMP SPACER, DL	
46	CS52078001	1	钮夹垫 DR	BUTTON CLAMP SPACER, DR	

F . 下轴装置 / Lower shaft mechanism

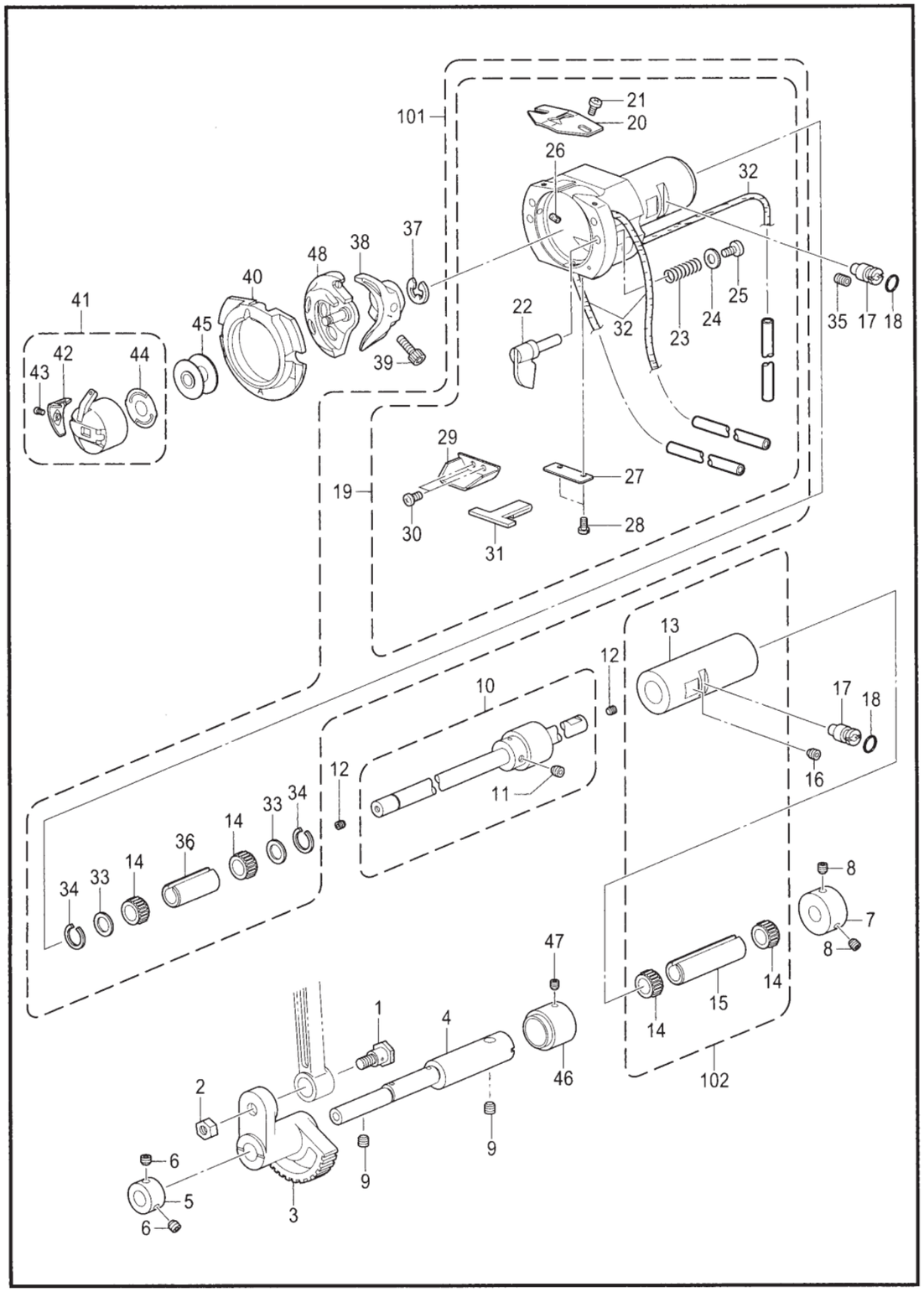

F. 下轴装置 / Lower shaft mechanism

参照号	零部件序号	数量	零部件名称	NAME OF PARTS	RM
1	CSA3226001	1	段螺钉	SHOULDER SCREW	
2	CSA3227001	1	螺母 M6	NUT(FT),M6	
3	CSA3228101	1	摆动齿轮	ROCK GEAR	
4	CSA4068101	1	摆动齿轮轴 A	ROCK GEAR SHAFT,A	
5	CSA3231001	1	紧圈 B	SET SCREW COLLAR,B	
6	C012060536	2	螺钉 M6X5	SET SCREW, SOCKET (FT) M6X5	
7	CSA3233001	1	紧圈	SET SCREW COLLAR	
8	CS23651001	2	固定螺钉 M6X6	SET SCREW, SOCKET (FT) M6X6	
9	C012060636	2	螺钉 M6X6	SET SCREW, SOCKET (FT) M6X6	
10	CSA3234101	1	下轴组件	LOWER SHAFT ASSY	
11	C012500536	1	螺钉 M5X5	SET SCREW, SOCKET (FT) M5X5	
12	C012400436	2	螺钉 M4X4	SET SCREW, SOCKET (FT) M4X4	
13	CSA3237001	1	下轴轴套	LOWER SHAFT BUSH	
14	CSA4187001	4	轴承	NEEDLE BEARING	
14	CSA4188001	4	轴承	NEEDLE BEARING	
14	CSA4189001	4	轴承	NEEDLE BEARING	
14	CSA4190001	4	轴承	NEEDLE BEARING	
15	CSA3273001	1	下轴套圈	LOWER SHAFT COLLAR	
16	C012060636	1	螺钉 M6X6	SET SCREW, SOCKET (FT) M6X6	
17	CSA3238101	2	旋梭调节轴	ADJUSTING STUD	
18	C081003670	2	O形圈 PW3	O RING, PW3	
19	CSA3239101	1	大旋梭台组件	SHUTTLE RACE BASE ASSY	
20	CS02429201	1	旋梭线导向	SHUTTLE RACE THREAD GUIDE	
21	CSA4199001	2	螺钉 M3X4	SCREW, M3X4	
22	CSA3241001	2	大旋梭固定柄	S-RACE BASE SETTING CLAW	
23	C152684101	2	弹簧	COMPRESSION SPRING	
24	C026030136	2	平垫圈 S3	WASHER, PLAIN S 3	
25	C062300616	2	螺钉 M3X6	SCREW, PAN M3X6	
26	C153050000	2	油毡	S-RACE BASE FELT	
27	CSA3242001	1	油毡支架	FELT HOLDER	
28	CS44924001	2	固定螺钉 M3X5.5	SCREW, M3X5.5	
29	CSA3274101	1	油毡支架	FELT HOLDER	
30	CS47307001	2	螺钉 M3X4	SCREW, M3X4	
31	CSA3275001	1	油毡 T	FELT,T	
32	CS59886001	3	油毡	FELT, L=360	
33	CSA3276001	2	垫圈 A	SPACER,A	
34	CSA3277001	2	止动圈	RETAINING RING	
35	C012060636	1	螺钉 M6X6	SET SCREW, SOCKET (FT) M6X6	
36	CSA3278001	1	轴圈	COLLAR	
37	C048070342	1	挡圈 E7	RETAINING RING, E7	
38	CSA3284001	1	梭托 D	DRIVER,D	
39	C018501232	1	螺栓 M5X12	BOLT, SOCKET M5X12	
40	C* P. 53	1	大旋梭	SHUTTLE RACE BASE	
41	C* P. 53	1	梭芯套组件	BOBBIN CASE ASSY	
42	C* P. 53	1	夹线簧	TENSION SPRING	
43	C* P. 53	1	螺钉	SCREW	
44	C* P. 53	1	防空转弹簧	ANTI-SPIN SPRING	
45	C* P. 53	1	梭芯	BOBBIN	
46	CSA3283101	1	紧圈 R	SET SCREW COLLAR,R	
47	C012500536	1	螺钉 M5X5	SET SCREW, SOCKET (FT) M5X5	
48	C* P. 53	1	中旋梭盒组件	SHUTTLE HOOK ASSY,W/BOX	
101	CSA6128001	1	大旋梭台复合件	SHUTTLE RACE BASE SET	
102	CSA6129001	1	下轴轴套组件	LOWER SHAFT BUSH ASSY	

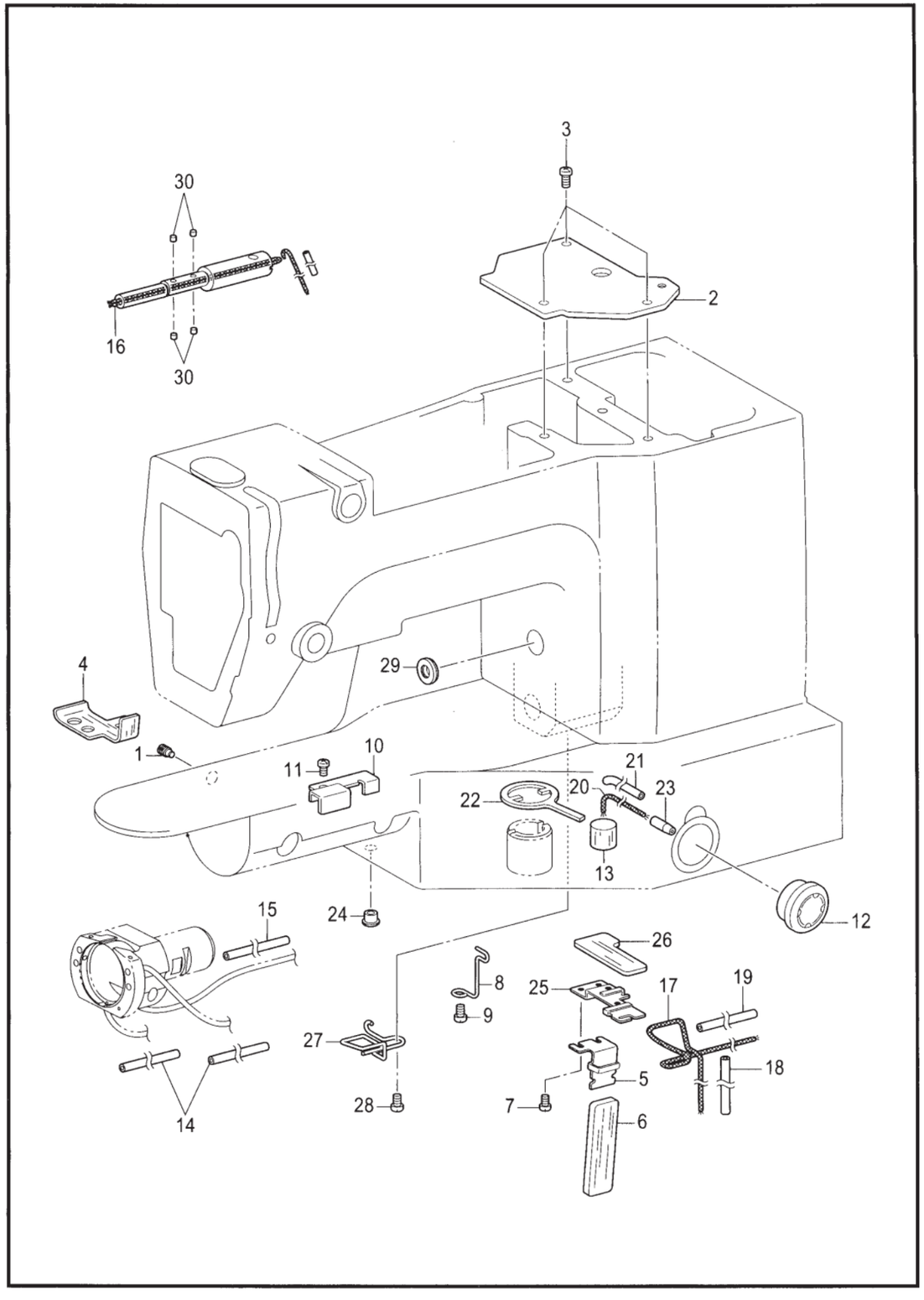

参照号	零部件序号	数量	零部件名称	NAME OF PARTS	RM
1	CSA3244001	1	螺钉	SET SCREW	
2	CSA3245001	1	曲柄盖	CRANK COVER	
3	C062061016	3	螺钉 M6X10	SCREW, PAN M6X10	
4	CSA3279001	1	油毡	FELT	
5	CSA3503201	1	下轴给油支架	LOWER SHAFT WICK SUPPORT	
6	CSA3504201	1	下轴齿轮油毡	LOWER SHAFT GEAR FELT	
7	C062400616	2	螺钉 M4X6	SCREW, PAN M4X6	
8	CSA3282001	1	油线夹 A	CORD HOLDER,A	
9	C062060816	1	螺钉 M6X8	SCREW, PAN M6X8	
10	CSA3249001	1	油管夹	OIL TUBE SUPPORT	
11	C062400616	1	螺钉 M4X6	SCREW, PAN M4X6	
12	CS49992000	1	油视窗	OIL GAUGE WINDOW	
13	CSA3379001	1	油毡	FELT	
14	CS50529000	2	油管 L=320	OIL TUBE, L=320	
15	CS28415000	1	油管 L=225	OIL TUBE (L=225)	
16	CS45849000	1	油线 L=300	WICK, L=300	
17	C153922001	1	油线 L=500	WICK L=500	
18	CSA1302001	1	维尼龙管	VINYL TUBE	
19	CS56877000	1	油管	OIL TUBE	
20	CS59886001	1	油毡 L=360	FELT, L=360	
21	C143671000	1	油管	0IL TUBE	
22	CSA3287001	1	油毡	X-FEED LEVER FELT	
23	CS07333001	1	油管 S	OIL FEEDING PIPE, S	
24	C146080000	1	橡皮塞	CORD BUSH	
25	CSA3246001	1	齿轮供油支架	GEAR WICK SUPPORT	
26	CSA3280001	1	油毡	GEAR FELT	
27	CSA4221001	1	电线夹 B	CORD HOLDER,B	
28	C062060816	1	螺钉 M6X8	SCREW,PAN M6X8	
29	CSA4222001	1	油毡	FELT	
30	C153050000	4	油毡	S-RACE BASE FELT	

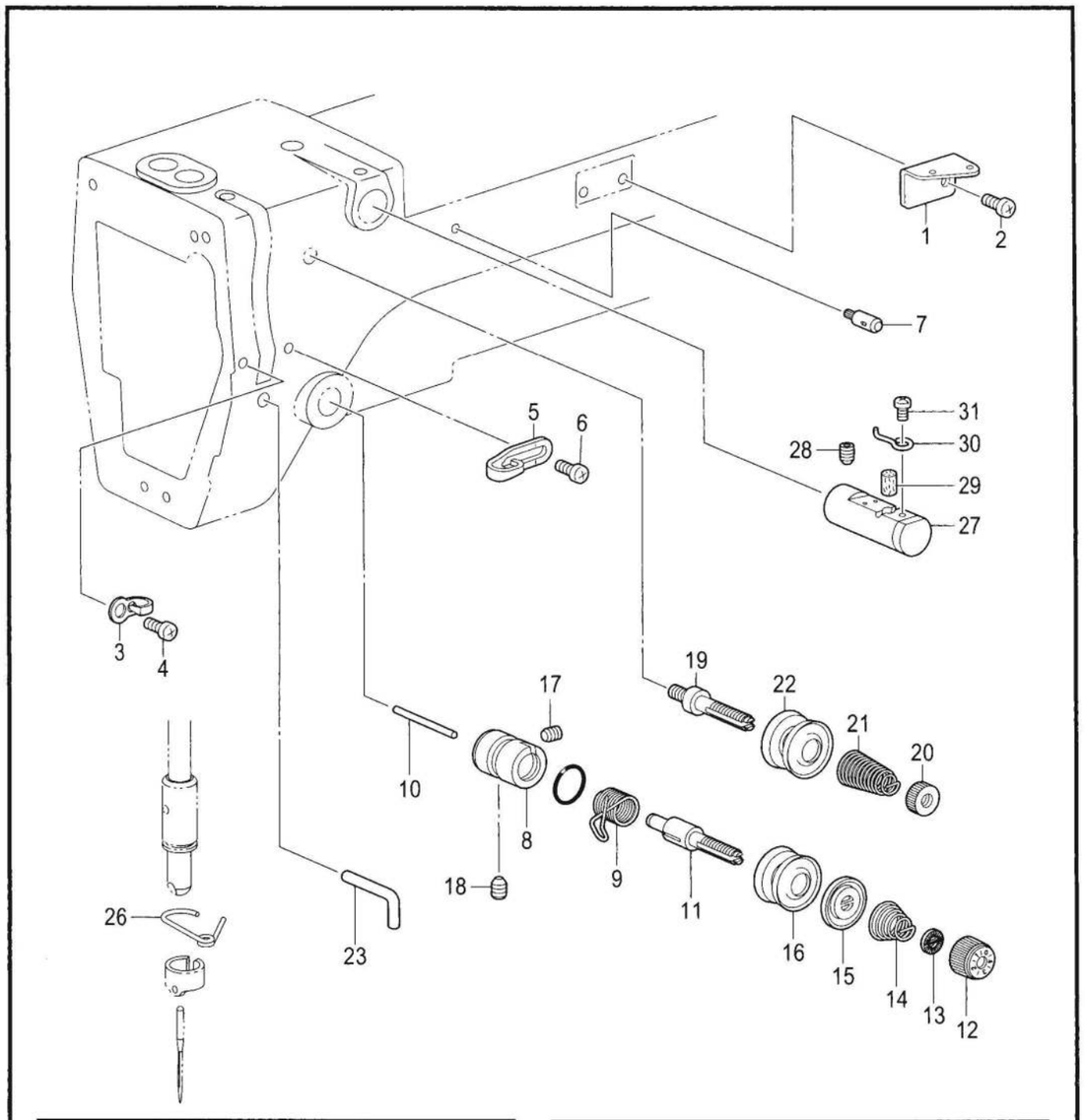

< 用于 430D 劳动布 / For " 430D "Denim >

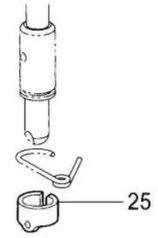

<用于 430D普通织物、针织物、女式内衣 / For " 430D"Ordinary materials, Knitted materials & Foundation garments>

< 用于 438D / For " 438D" >

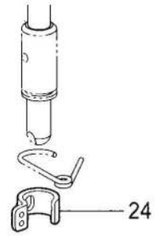

参照号	零部件序号	数量	零部件名称	NAME OF PARTS	RM
1	CSA3250001	1	过线导向 A	ARM THREAD GUIDE,A	
2	C062500616	1	螺钉 M5X6	SCREW, PAN M5X6	
3	CSA4333001	1	过线导向 B	ARM THREAD GUIDE,B	
4	C062500616	1	螺钉 M5X6	SCREW, PAN M5X6	
5	CSA3252001	1	过线导向 C	ARM THREAD GUIDE,C	
6	C062500616	1	螺钉 M5X6	SCREW, PAN M5X6	
7	C153049001	1	面线导向杆	UPPER THREAD GUIDE STUD	
8	CSA3254001	1	夹线座	TENSION BRACKET	
9	C* P. 53	1	挑线弹簧	THREAD TAKE-UP SPRING	
10	CS12699000	1	松线销	TENSION RELEASE PIN	
11	CSA3255001	1	夹线杆轴	TENSION STUD	
12	CS31032001	1	压线螺母	TENSION NUT	
13	CS12441001	1	止动垫圈	WASHER	
14	C* P. 53	1	弹簧	TENSION SPRING	
15	C159805001	1	夹线压盘	TENSION DISC PRESSER	
16	C145446001	2	夹线盘	DISC, TENSION	
17	C100402004	1	固定螺钉 SM3.57	SET SCREW, SM3.57	
18	CSA4143001	1	螺钉 M6X6	SET SCREW, (FT) M6X6	
19	CSA3256001	1	夹线杆轴 A	TENSION STUD,A	
20	C100136001	1	夹线螺母	TENSION NUT	
21	CSA4146001	1	弹簧	SUB TENSION SPRING	
22	C145446001	2	夹线盘	DISC, TENSION	
23	C159224001	1	线钩	THREAD GUIDE, ARM	
			<用于 430D 普通织物、针织物、女式内衣>	<For " 430D" Ordinary materials, Knitted materials & Foundation garments>	
			<用于 438D>	<For " 438D">	
24	CSA3635101	1	针杆线导向 B	NEEDLE BAR THREAD GUIDE,B	
			<用于 430D 劳动布>	<For " 430D" Denim>	
25	CSA3257101	1	针杆线导向 A	NEEDLE BAR THREAD GUIDE,A	
26	CSA3258001	1	针杆轴套线导向 D	N-BAR BUSH THREAD GUIDE,D	
27	C152881001	1	线冷却器组件	NEEDLE COOLER ASSY	
28	C012060636	1	螺钉 M6X6	SET SCREW, SOCKET(FT)M6X6	
29	C152883000	1	油毡 8X15.5	FELT,8X15.5	
30	C152884001	1	过线钩	NEEDLE COOLER THREAD GUIDE	
31	C062670412	1	螺钉 SM3.57-40X4	SCREW,PAN SM3.57-40X4	

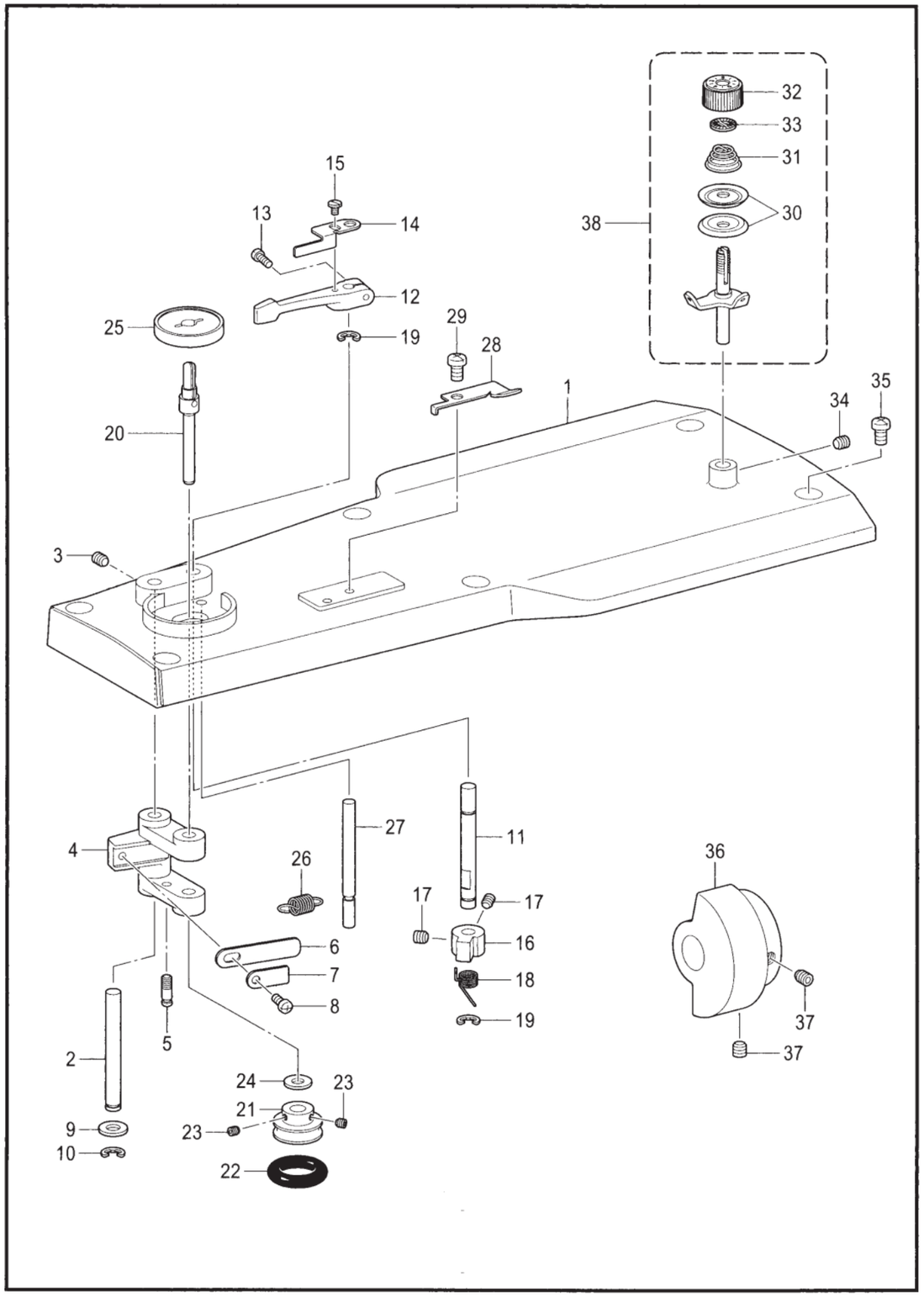

参照号	零部件序号	数量	零部件名称	NAME OF PARTS	RM
1	CSA3289001	1	上盖	TOP COVER 430D	
2	CSA3290001	1	卷线手柄轴	SHAFT,BW-LEVER	
3	C012500536	1	螺钉 M5X5	SET SCREW, SOCKET (FT) M5X5	
4	CSA3291001	1	卷线手柄	BOBBIN WINDER LEVER	
5	CSA4171001	1	弹簧挂钩	SPRING HOOK	
6	C152936001	1	板弹簧	PLATE SPRING	
7	C152937001	1	垫圈	WASHER	
8	C062350616	1	螺钉 M3.5X6	SCREW, PAN M3.5X6	
9	C159486001	1	垫圈	WASHER	
10	C048050342	1	挡圈 E5	RETAINING RING, E5	
11	CSA3293001	1	卷线卡爪轴	STUD,B-WINDER CLAW	
12	CSA1984001	1	梭芯压臂柄	BOBBIN PRESSER ARM	
13	C062401216	1	螺钉 M4X12	SCREW, PAN M4X12	
14	CSA3294001	1	梭芯压杆	BOBBIN PRESSER	
15	CS23418002	1	螺钉 M4X5	SCREW, M4X5	
16	CSA3295001	1	卷线卡爪	CLAW,B-WINDER	
17	C012400436	2	螺钉 M4X4	SET SCREW, SOCKET (FT) M4X4	
18	CS10438001	1	弹簧	SPRING, TWIST	
19	C048050342	2	挡圈 E5	RETAINING RING, E5	
20	CSA3296001	1	卷线轴	BOBBIN WINDER SHAFT	
21	CSA3297001	1	卷线器	WHEEL,B-WINDER	
22	C120448001	1	橡皮圈	BOBBIN WINDER RUBBER BAND	
23	C012400436	2	螺钉 M4X4	SET SCREW, SOCKET (FT) M4X4	
24	C159486001	2	垫圈	WASHER	
25	CSA1988001	1	梭芯座	BOBBIN SUPPORT	
26	CS10268001	1	拉簧	SPRING	
27	CSA3298001	1	止动轴	STPPER SHAFT,B-WINDER	
28	CSA3299001	1	切刀	KNIFE	
29	C062500616	1	螺钉 M5X6	SCREW, PAN M5X6	
30	C145446001	2	夹线盘	DISC, TENSION	
31	C100401021	1	夹线弹簧	TENSION SPRING	
32	CS31032001	1	压线螺母	TENSION NUT	
33	CS12441001	1	止动垫圈	WASHER	
34	C012500536	1	螺钉 M5X5	SET SCREW, SOCKET (FT) M5X5	
35	C062061016	6	螺钉 M6X10	SCREW, PAN M6X10	
36	CSA3300001	1	卷线驱动轮	DRIVINNG WHEEL,B-WINDER	
37	CS23651001	2	固定螺钉 M6X6	SET SCREW, SOCKET (FT) M6X6	
38	CSA1994101	1	卷线器夹线组件	BOBBIN WINDER TENSION ASSY	

K . 切线装置 / Thread trimmer mechanism

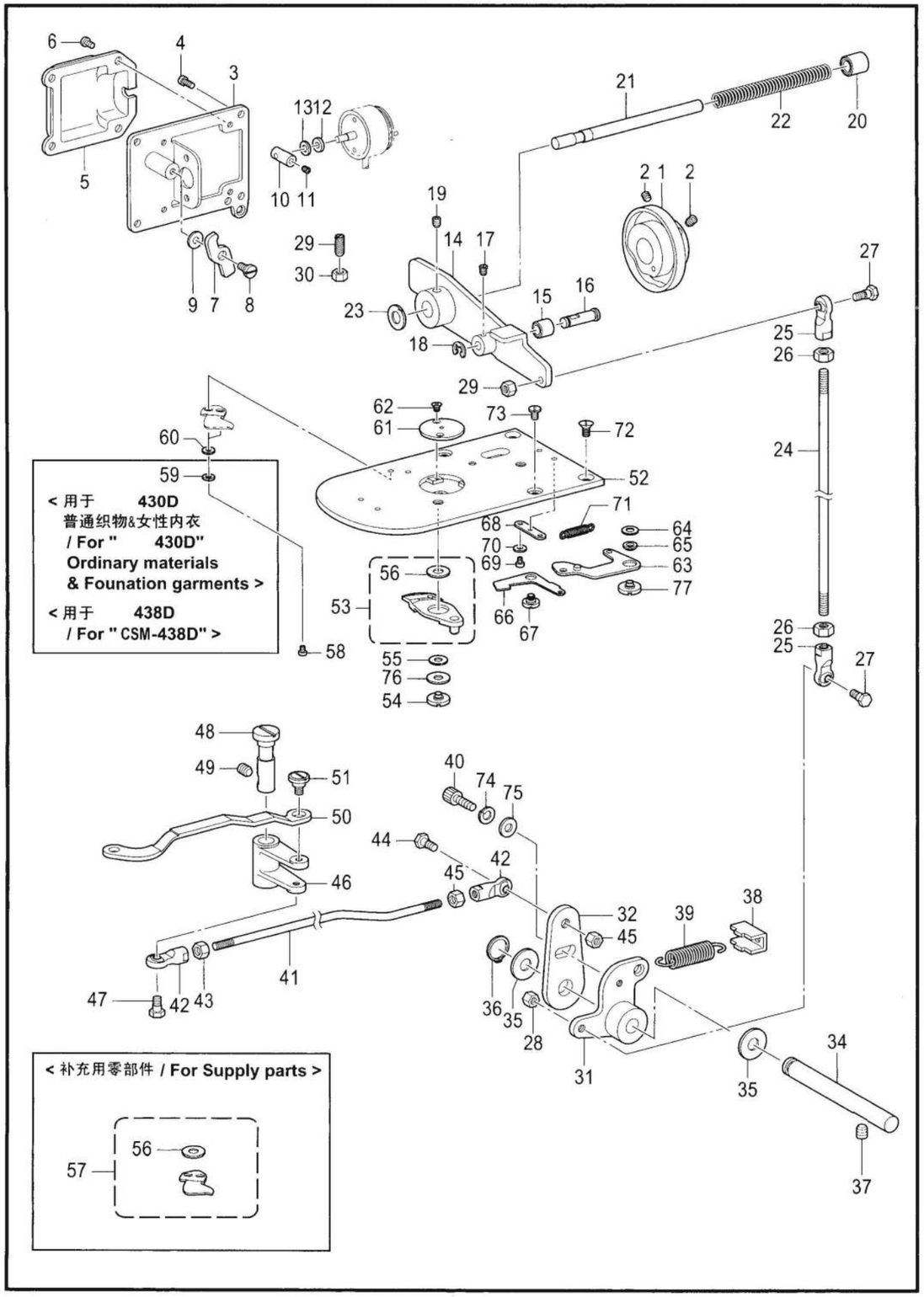

K. 切线装置 / Thread trimmer mechanism

参照号	零部件序号	数量	零部件名称	NAME OF PARTS	RM
1	CSA3301101	1	切线凸轮	THREAD TRIMMER CAM	
2	CS23651001	2	固定螺钉 M6X6	SET SCREW, SOCKET (FT) M6X6	
3	CSA3304101	1	电磁铁安装板	SETTING PLATE ,SOLENOID	
4	C062400816	4	螺钉 M4X8	SCREW, PAN M4X8	
5	CSA3303001	1	电磁铁盖	TR-SOLENOID COVER	
6	C060400516	4	螺钉 M4X5	SCREW, BIND M4X5	
7	CSA3305001	1	驱动杆压杆	PUSHING LEVER,DRIVING LEVER	
8	CSA3306001	1	段螺钉 7-3	SHOULDER SCREW,7-3	
9	CS39690021	1	垫圈	WASHER	
10	CSA3307001	1	电磁铁杆	SOLENOID LEVER	
11	C012400436	1	螺钉 M4X4	SET SCREW, SOCKET (FT) M4X4	
12	C154599000	1	电磁铁缓冲垫圈	SOLENOID CUSHION	
13	CS02652001	1	垫圈	WASHER	
14	CSA3309001	1	切线驱动杆	TR-DRIVING LEVER	
15	CSA3310001	1	切线滚轮	COLLAR,TR-TRIMMER	
16	CSA3311001	1	切线滚轮轴	COLLAR SHAFT	
17	C012400436	1	螺钉 M4X4	SET SCREW, SOCKET (FT) M4X4	
18	C048040342	1	挡圈 E4	RETAINING RING, E4	
19	CS23651001	1	固定螺钉 M6X6	SET SCREW, SOCKET (FT) M6X6	
20	C231071001	1	轴套 8X15	BUSH, 8X15	
21	CSA3312001	1	驱动杆导向轴	GUIDE SHAFT	
22	CSA3313101	1	弹簧	SPRING,COMPRESSION	
23	C154596000	1	减震垫圈	CUSHION	
24	CSA3315001	1	切线杆 V	THREAD TRIMMER ROD V	
25	CS32465001	2	接头组件	BALL JOINT ASSY	
26	C021060106	2	螺母 M6	NUT, 1 M6	
27	CS32462001	2	段螺钉 B M6	SHOULDER SCREW, B ;M6	
28	C021060306	2	六角螺母 M6	NUT, 3 M6	
29	CS25475001	1	螺钉 M6X19	SET SCREW, M6X19	
30	C021060106	1	螺母 M6	NUT, 1 M6	
31	CSA4546001	1	切线杠杆 V	THREAD TRIMMER LEVER V	
32	CSA3317001	1	切线杠杆 H	THREAD TRIMMER LEVER H	
34	CSA3319101	1	切线杠杆轴	SHAFT,TR-TRIMMER LEVER	
35	CSA4545001	2	垫片	SPECER	
36	C048080142	1	轴用挡圈 C8	RETAINING RING EXTERNAL C8	
37	C012060636	2	螺钉 M6X6	SET SCREW, SOCKET (FT) M6X6	
38	CSA3320101	1	弹簧挂钩	SPRING HOOK	
39	CSA3321001	1	切线复位弹簧	SPRING,EXTENSION	
40	C018501232	1	螺栓 M5X12	BOLT, SOCKET M5X12	
74	C028050246	1	弹簧垫圈 2-5	WASHER SPRING 2-5	
75	C146352002	1	垫圈 5	WASHER,PLAIN 5	
41	CSA3323001	1	切线杆 H	THREAD TRIMMER ROD H	
42	CS32465001	2	接头组件	BALL JOINT ASSY	
43	C021060106	2	螺母 M6	NUT, 1 M6	
44	CS32462001	1	段螺钉 B M6	SHOULDER SCREW, B ;M6	
45	C021060306	1	六角螺母 M6	NUT, 3 M6	
46	CSA3324001	1	动刀曲柄	MOVING KNIFE LEVER	
47	CSA3325001	1	段螺钉 6.35-6	SHOULDER SCREW,6.35-6	
48	CSA3326001	1	动刀曲柄轴	SHAFT,M-KNIFE LEVER	
49	C012060636	1	螺钉 M6X6	SET SCREW, SOCKET (FT) M6X6	
50	CSA3327101	1	动刀连杆	M-KNIFE CONNECTING PLATE	
51	CSA4354001	1	段螺钉 6-1.8	SHOULDER SCREW ,6-1.8	
52	CSA3655001	1	针板 SC	NEEDLE PLATE,SC	

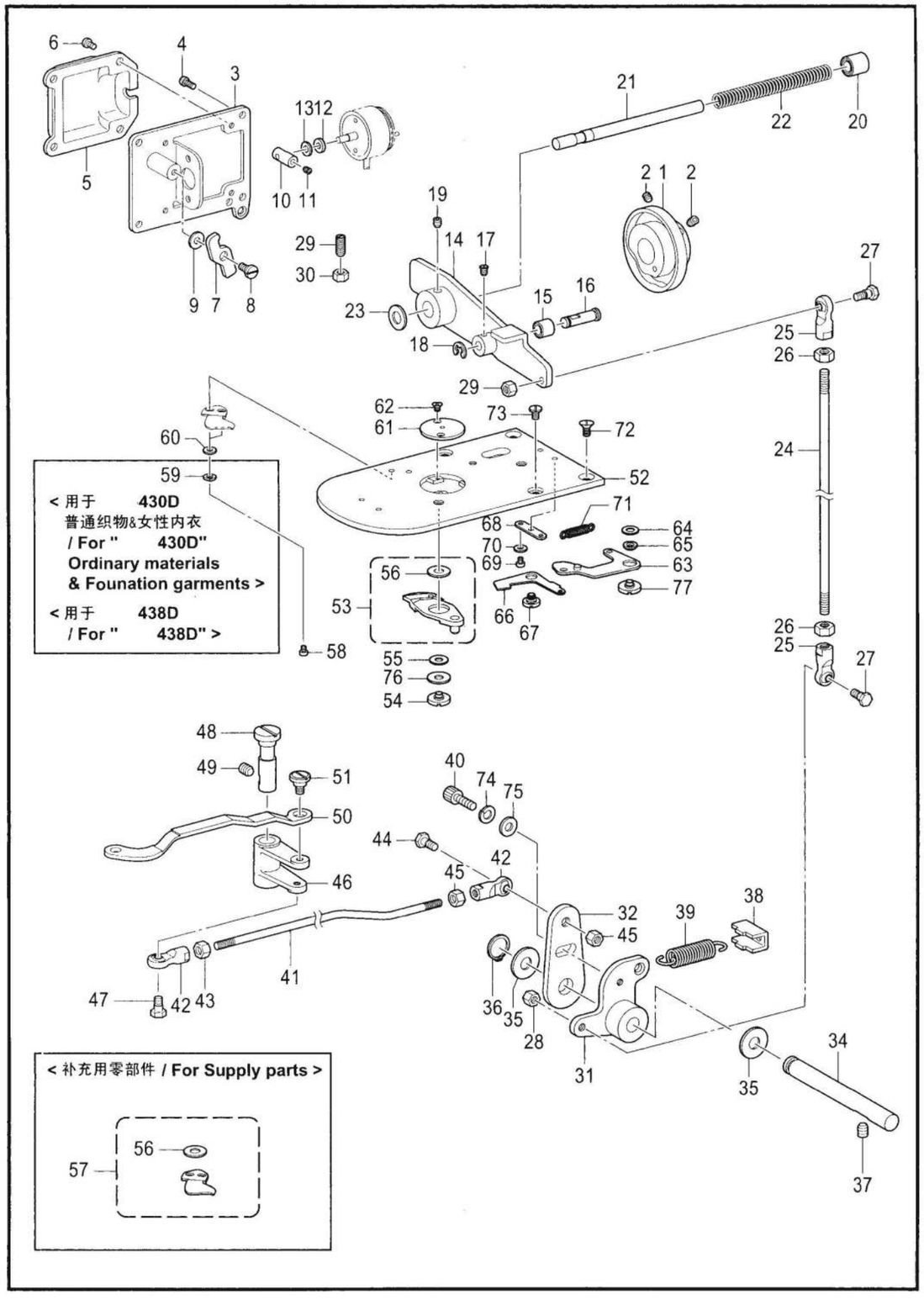

参照号	零部件序号	数量	零部件名称	NAME OF PARTS	RM
			＜用于 430D 普通织物、针织物、女式内衣＞	<For " 430D" Ordinary materials, Knitted materials & Foundation garments>	
53	CSA6429001	1	动刀复合件 F-SC	MOVABLE KNIFE SET F-SC	
56	CSA6397001	1	垫片 0.2	M-KNIFE SPACER T0.2	
56	CSA3334001	1	垫片 0.3	M-KNIFE SPACER T0.3	
56	CSA6398001	1	垫片 0.4	M-KNIFE SPACER T0.4	
			＜用于 430D 劳动布＞	<For " 430D"Denim>	
53	CSA6596001	1	动刀复合件 F	MOVABLE KNIFE SET F	
56	CSA6397001	1	垫片 0.2	M-KNIFE SPACER T0.2	
56	CSA3334001	1	垫片 0.3	M-KNIFE SPACER T0.3	
56	CSA6398001	1	垫片 0.4	M-KNIFE SPACER T0.4	
			＜用于 438D＞	<For 438D>	
53	CSA6432001	1	动刀复合件 F-SCS	MOVABLE KNIFE SET F-SCS	
56	CSA6397001	1	垫片 0.2	M-KNIFE SPACER T0.2	
56	CSA3334001	1	垫片 0.3	M-KNIFE SPACER T0.3	
56	CSA6398001	1	垫片 0.4	M-KNIFE SPACER T0.4	
54	CSA4518001	1	段螺钉	MOVABLE KNIFE SHOULDER SCREW	
76	CSA4519001	1	轴向垫圈	THRUST WASHER	
55	CS00705001	1	动刀圈套	MOVABLE KNIFE COLLAR	
			＜用于 430D 普通织物、针织物、女式内衣＞	<For " 430D" Ordinary materials, Knitted materials & Foundation garments>	
			＜ 438D用>	<For 438D>	
57	CSA6431001	1	定刀复合件 F-SC	FIXED KNIFE SET F-SC	
56	CSA6397001	1	垫片 0.2	M-KNIFE SPACER T0.2	
56	CSA3334001	1	垫片 0.3	M-KNIFE SPACER T0.3	
56	CSA6398001	1	垫片 0.4	M-KNIFE SPACER T0.4	
			＜用于 430D 劳动布＞	<For " 430D"Denim>	
57	CSA6597001	1	定刀复合件 F	FIXED KNIFE SET F	
56	CSA6397001	1	垫片 0.2	M-KNIFE SPACER T0.2	
56	CSA3334001	1	垫片 0.3	M-KNIFE SPACER T0.3	
56	CSA6398001	1	垫片 0.4	M-KNIFE SPACER T0.4	
58	C062300416	2	螺钉 M3X4	SCREW, PAN M3X4	
			＜用于 430D 普通织物、针织物、女式内衣＞	<For " 430D" Ordinary materials, Knitted materials & Foundation garments>	
			＜用于 438D＞	<For 438D>	
59	C028030246	2	弹簧垫圈 2-3	WASHER,SPRING2-3	
60	C025030236	2	平垫圈 M3	WASHER, PLAIN M 3	
61	C* P. 53	1	针孔板	NEEDLE HOLE PLATE	
62	C100360003	2	螺钉 SM2.38	SCREW	
63	CSA3337001	1	夹线组件 D	THREAD NIPPER ASSY D	
64	CSA4330001	1	垫片	SPACER,THREAD NIPPER	
65	CSA4329001	1	夹线圈套	COLLAR,THREAD NIPPER	
66	CSA3341001	1	压线板 U	THREAD NIPPER U	
77	CSA3333001	1	段螺钉	THREAD NIPPER SHOULDER SCREW	
67	CSA3342001	1	段螺钉 6-0.9	SHOULDER SCREW,6-0.9	
68	CSA3343001	1	弹簧挂钩板	PLATE,SPRING HOOK	
69	C062300416	2	螺钉 M3X4	SCREW, PAN M3X4	
70	C025030236	2	平垫圈 M3	WASHER, PLAIN M 3	
71	CSA3344001	1	弹簧	SPRING,EXTENSION	
72	CS25310101	2	螺钉 M4	SCREW, FLAT M4	
73	CSA3538001	2	螺钉 M4X8	SCREW,M4X8	

L . 扫线装置 / Thread wiper mechanism

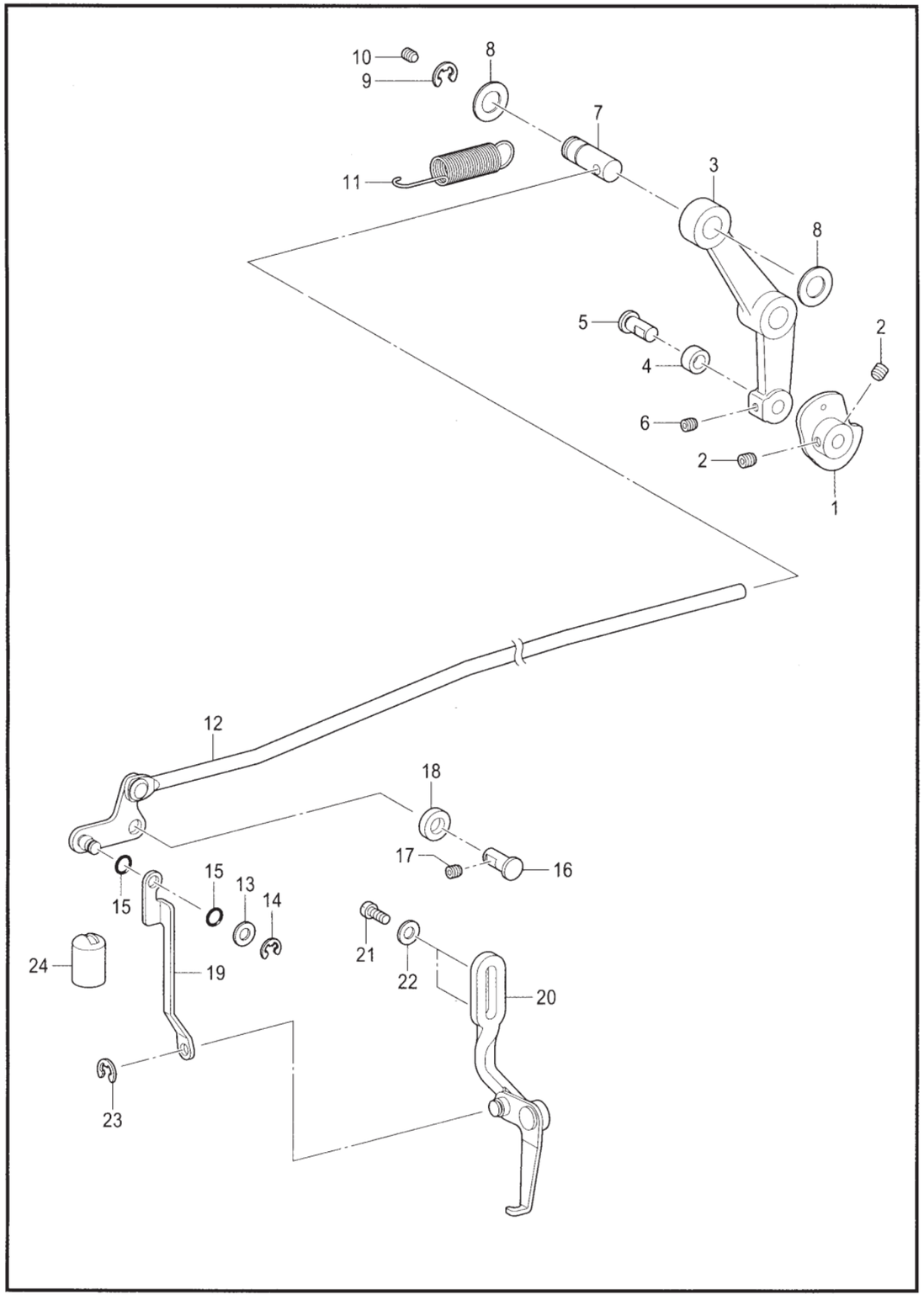

L. 扫线装置 / Thread wiper mechanism

参照号	零部件序号	数量	零部件名称	NAME OF PARTS	RM
1	CSA3447001	1	扫线凸轮	THREAD WIPER CAM	
2	C012060636	2	螺钉 M6X6	SET SCREW, SOCKET (FT) M6X6	
3	CSA3448001	1	扫线驱动曲柄	DRIVING LEVER,;THREAD WIPER	
4	CSA3449001	1	扫线滚轮	THREAD WIPER ROLLER	
5	CSA3441001	1	抬压滚轮轴	W-CLAMP LIFTER ROLLER SHAFT	
6	C012500536	1	螺钉 M5X5	SET SCREW, SOCKET (FT) M5X5	
7	CSA3451001	1	扫线杆轴	THREAD WIPER ROD SHAFT	
8	CS20356001	2	平垫圈 10	WASHER, PLAIN 10	
9	C048080342	1	挡圈 E8	RETAINING RING, E8	
10	C012500536	1	螺钉 M5X5	SET SCREW, SOCKET (FT) M5X5	
11	CSA3446001	1	弹簧	SPRING	
12	CSA3452001	1	扫线杆组件	THREAD WIPER ROD ASSY	
13	C025050134	1	平垫圈 S5	WASHER, PLAIN S 5	
14	C048040342	1	挡圈 E4	RETAINING RING, E4	
15	C081005070	2	O形圈 P5	O RING, P5	
16	CSA3441001	1	抬压滚轮轴	W-CLAMP LIFTER ROLLER SHAFT	
17	C012500536	1	螺钉 M5X5	SET SCREW, SOCKET (FT) M5X5	
18	CS38033002	1	定位圈 13	COLLAR, 13	
19	CSA3458001	1	扫线连接板	CONNECTING PLATE	
20	CSA3459101	1	扫线臂组件	THREAD WIPER ARM ASSY	
21	C062401006	2	螺钉 M4X10	SCREW, PAN M4X10	
22	C025040236	2	平垫圈 M4	WASHER, PLAIN M 4	
23	C048040342	1	挡圈 E4	RETAINING RING, E4	
24	CSA3464001	1	油塞	OIL CAP	

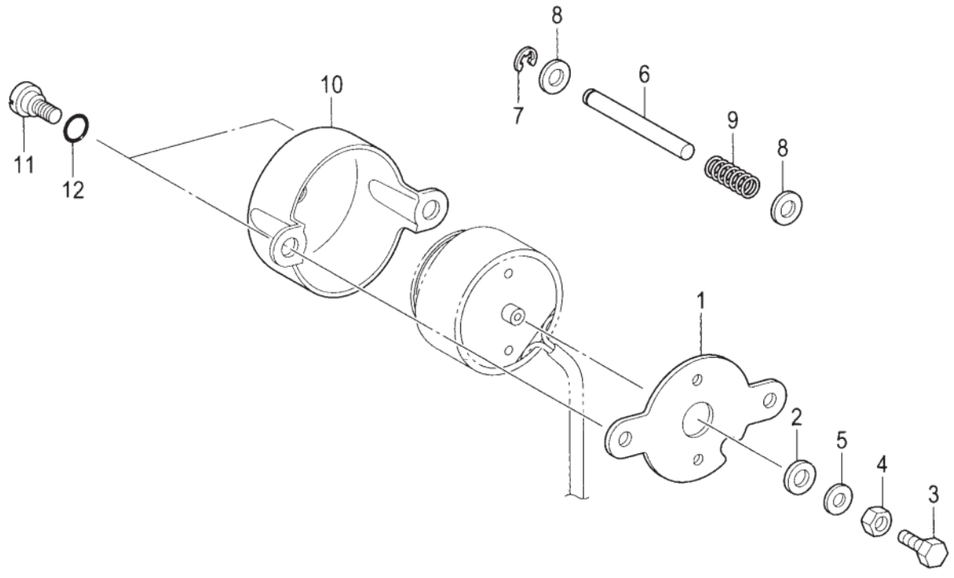

参照号	零部件序号	数量	零部件名称	NAME OF PARTS	RM
1	CSA3345001	1	电磁铁安装板	SETTING PLATE,SOLENOID	
2	C154599000	1	电磁铁缓冲垫圈	SOLENOID CUSHION	
3	C017401015	1	螺栓 M4X10	BOLT, M4X10	
4	C021400306	1	六角螺母 M4	NUT, 3 M4	
5	C102707002	1	垫圈 4	WASHER	
6	CSA3347001	1	松线杆	TENSION RELEASE BAR	
7	C048040342	1	挡圈 E4	RETAINING RING, E4	
8	C025050236	2	平垫圈 M5	WASHER, PLAIN M 5	
9	CSA3348001	1	弹簧	SPRING,COMPRESSION	
10	CSA3349001	1	电磁铁盖	SOLENOID COVER	
11	CSA3306001	2	段螺钉 7-3	SHOULDER SCREW,7-3	
12	C081007070	2	O形圈 P7	O RING P7	

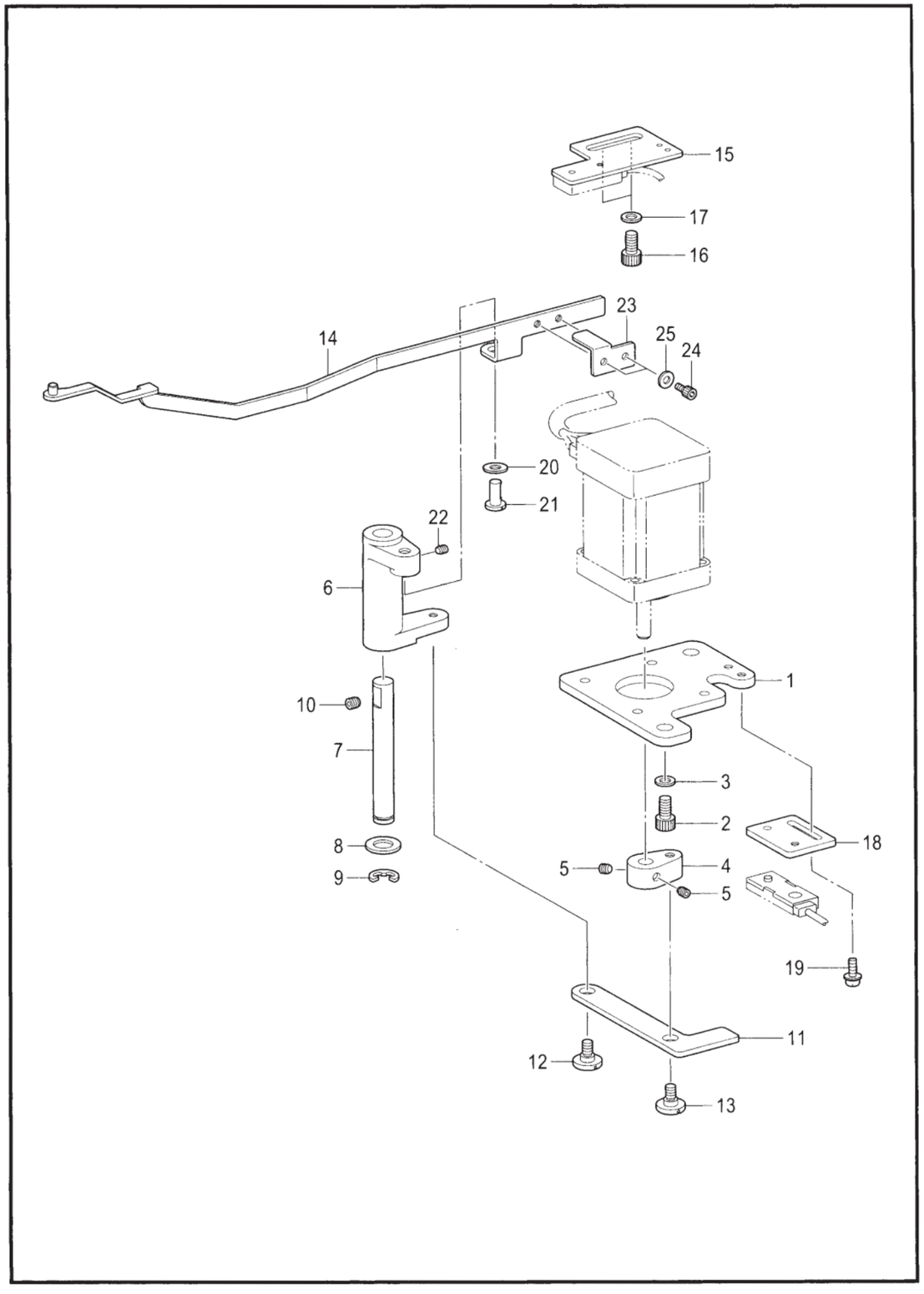

参照号	零部件序号	数量	零部件名称	NAME OF PARTS	RM
1	CSA3351001	1	TN马达安装板	SETTING PLATE,TN-MOTOR	
2	C018061236	2	螺栓 M6X12	BOLT, SOCKET M6X12	
3	C155559001	2	平垫圈 M6	WASHER, PLAIN M 6	
4	CSA3352101	1	马达曲柄	TN-MOTOR LEVER	
5	C012400436	2	螺钉 M4X4	SET SCREW, SOCKET (FT) M4X4	
6	CSA3353201	1	夹线曲柄	TN-LEVER	
7	CSA3354001	1	夹线曲柄轴	TN-LEVER SHAFT	
8	C153596001	1	垫圈	WASHER	
9	C048070342	1	挡圈 E7	RETAINING RING, E7	
10	C012060636	1	螺钉 M6X6	SET SCREW, SOCKET (FT) M6X6	
11	CSA3355001	1	夹线连接板 B	TN-CONNECTING PLATE B	
12	CSA4461001	1	段螺钉 6-2.5	SHOULDER SCREW,6-3.5	
13	CSA4354001	1	段螺钉 6-1.8	SHOULDER SCREW,6-1.8	
14	CSA3357101	1	夹线连接板组件 F	TN-CONNECTING PLATE ASSY F	
23	CSA5137001	1	TN传感器挡块	TN-SENSOR DOG	
24	C018300636	2	螺栓 M3X6	BOLT SOCKET M3X6	
25	C025030236	2	平垫圈 M3	WASHER PLAIN M 3	
15	CSA5138001	1	TN传感器安装板 B	SETTING PLATE B,TN-SENSOR	
16	C018061236	2	螺栓 M6X12	BOLT, SOCKET M6X12	
17	C155559001	2	平垫圈 M6	WASHER, PLAIN	
18	CSA3361001	1	TN传感器安装板 F	SETTING PLATE F,TN-SENSOR	
19	C0A4300805	2	螺栓(带垫圈) M3X8DA	SCREW, PAN (S/P WASHER) M3X8	
20	C155559001	1	平垫圈 M6	WASHER, PLAIN	
21	CS10202201	1	连杆曲柄短轴	LEVER SHAFT	
22	C012400436	1	螺钉 M4X4	SET SCREW SOCKET (FT) M4X4	

P1 . 控制箱装置 / Control box mechanism

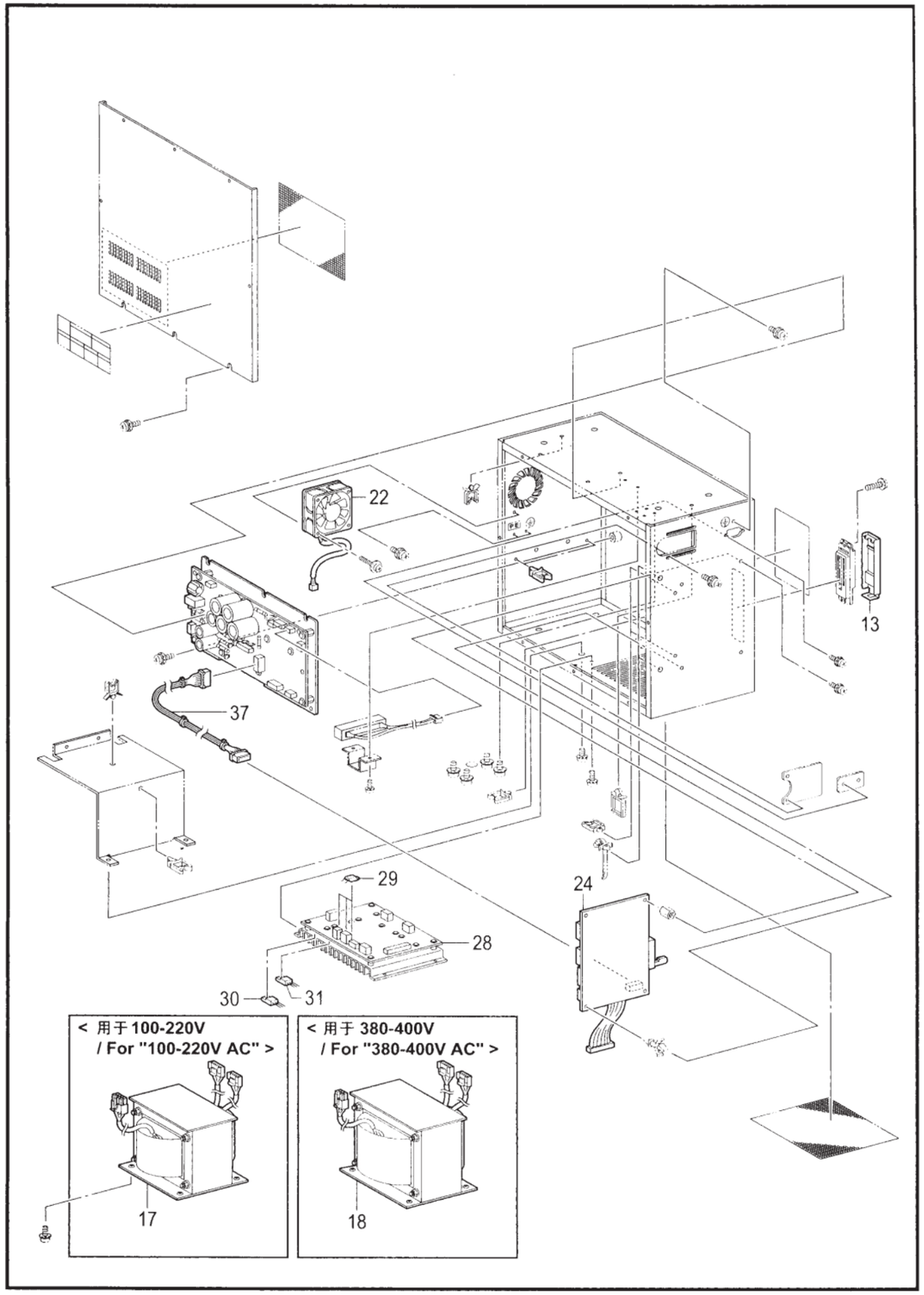

P1. 控制箱装置 / Control box mechanism

参照号	零部件序号	数量	零部件名称	NAME OF PARTS	RM
13	CSA6364001	1	盖组件 CF	CF CAP ASSY	
			<用于100-220V>	<For "100-220V AC">	
17	CSA3720001	1	变压器 LV	TRANSFORMER LOW VOLTAGE	
			<用于380-400V>	<For "380-400V AC">	
18	CSA3808001	1	变压器 HV	TRANSFORMER HIGH VOLTAGE	
22	CSA3797001	1	DC风扇马达组件	DC-FAN MOTOR ASSY	
24	CSA3724101	1	主基板组件	PCB ASSY,MAIN	
28	CSA3739301	1	基板组件 PMD	PCB ASSY,PMD	
29	CSA3744001	3	FET FS10ASJ-2	TRANSISTOR, FET:FS10ASJ-2	
30	CSA3722001	1	MOSFET FX20KMJ2	TRANSISTOR,FET:FX20KMJ-2	
31	CS49484000	1	MOSFETFS10KMJ-2	TRANSISTOR, FET:FS10KMJ-2	
37	CSA3806001	1	电线	HARNESS, MAIN POWER SUPPLY	

P2 . 控制箱装置(电源基板) / Control box (PCB) mechanism

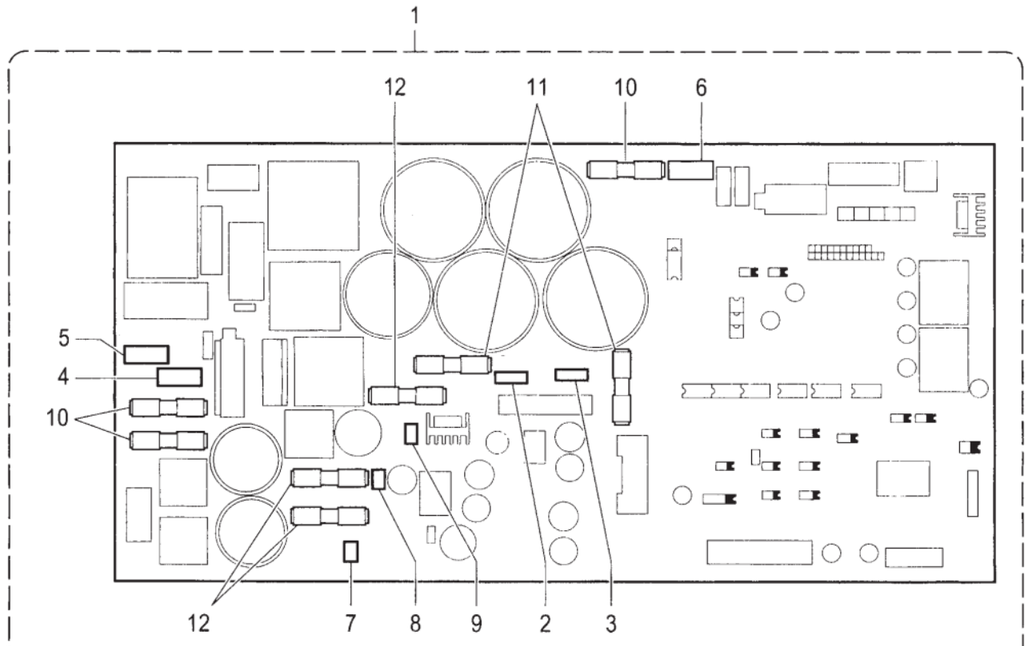

P2. 控制箱装置(电源基板) / Control box (PCB) mechanism

参照号	零部件序号	数量	零部件名称	NAME OF PARTS	RM
1	CSA3755201	1	电源马达基板组件	PCB ASSY,POWER SUPPLY MOTOR	
2	CSA3765001	1	电阻 V10D101	VARISTOR:V10D101	
3	CSA3766001	1	电阻 V10D241	VARISTOR:V10D241	
4	CSA3767001	1	电阻 V14D511	VARISTOR:V14D511	
5	CSA3762001	1	电阻 V14D911	VARISTOR:V14D911	
6	CSA3768001	1	电阻 V14D561	VARISTOR:V14D561	
7	CSA3769001	1	电阻 V5D121	VARISTOR:V5D121	
8	CSA3770001	1	电阻 V5D330	VARISTOR:V5D330	
9	CSA3771001	1	电阻 V5D820	VARISTOR:V5D820	
10	CSA3794001	3	保险丝 250V-15A	G FUSE S 15A	
11	CSA3795001	2	保险丝 250V-6A	G FUSE S 6A	
12	C616167001	3	保险丝 250V-3A	G FUSE S 3A	

Q . 开关装置 / Power switch mechanism

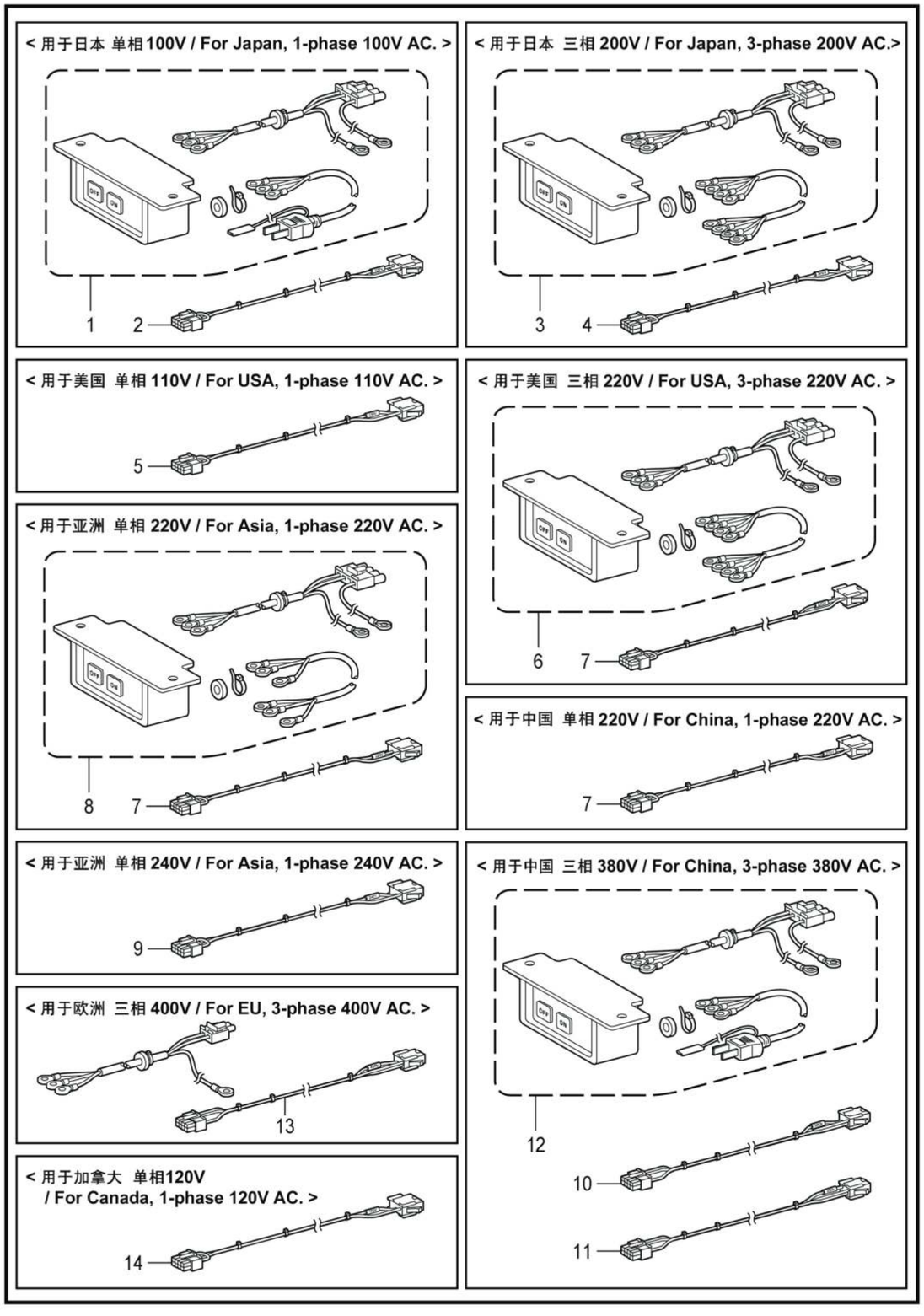

Q. 开关装置 / Power switch mechanism

参照号	零部件序号	数量	零部件名称	NAME OF PARTS	RM
			＜用于日本 单相 100V＞	＜For Japan, 1-phase 100V AC.＞	
1	CSA3813001	1	电源开关组件 1P-JP	POWER SUPPLY SWITCH ASSY,1P-JP	
2	CSA3822001	1	V切换电线 100V	VOLTAGE SELECT HARNESS 100V	
			＜用于日本 三相 200V＞	＜For Japan,3-phase 200V AC.＞	
3	CSA3819001	1	电源开关组件 3P-JP	POWER SUPPLY SWITCH ASSY,3P-JP	
4	CSA3825001	1	V切换电线 200V	VOLTAGE SELECT HARNESS 200V	
			＜用于美国 单相 110V＞	＜For USA,1-phase 110V AC.＞	
5	CSA3823001	1	V切换电线 110V	VOLTAGE SELECT HARNESS 110V	
			＜用于美国 三相 220V＞	＜For USA,3-phase 220V AC.＞	
6	CSA3816001	1	电源开关组件 3P-L	POWER SUPPLY SWITCH ASSY,3P-L	
7	CSA3812001	1	V切换电线 220V	VOLTAGE SELECT HARNESS 220V	
			＜用于亚洲 单相 220V＞	＜For Asia, 1-phase 220V AC.＞	
8	CSA3809001	1	电源开关组件 1P	POWER SUPPLY SWITCH ASSY,1P	
7	CSA3812001	1	V切换电线 220V	VOLTAGE SELECT HARNESS 220V	
			＜用于亚洲 单相 240V＞	＜For Asia, 1-phase 240V AC.＞	
9	CSA3826001	1	V切换电线 240V	VOLTAGE SELECT HARNESS 240V	
			＜用于中国 单相 220V＞	＜For China,1-phase 220V AC.＞	
7	CSA3812001	1	V切换电线 220V	VOLTAGE SELECT HARNESS 220V	
			＜用于中国 三相 380V＞	＜For China,3-phase 380V AC.＞	
10	CSA3827001	1	V切换电线 380V	VOLTAGE SELECT HARNESS 380V	
11	CSA3789101	1	V切换电线 H220V	VOLTAGE SELECT HARNESS H220V	
12	CSA4510001	1	电源开关组件 3P-H	POWER SUPPLY SWITCH ASSY,3P-H	
			＜用于欧洲 三相 400V＞	＜For Europe,3-phase 400V AC.＞	
13	CSA3828001	1	V切换电线 400V	VOLTAGE SELECT HARNESS 400V	
			＜用于加拿大 单相 120V＞	＜For Canada, 1-phase 120V AC.＞	
14	CSA3824001	1	V切换电线 120V	VOLTAGE SELECT HARNESS 120V	

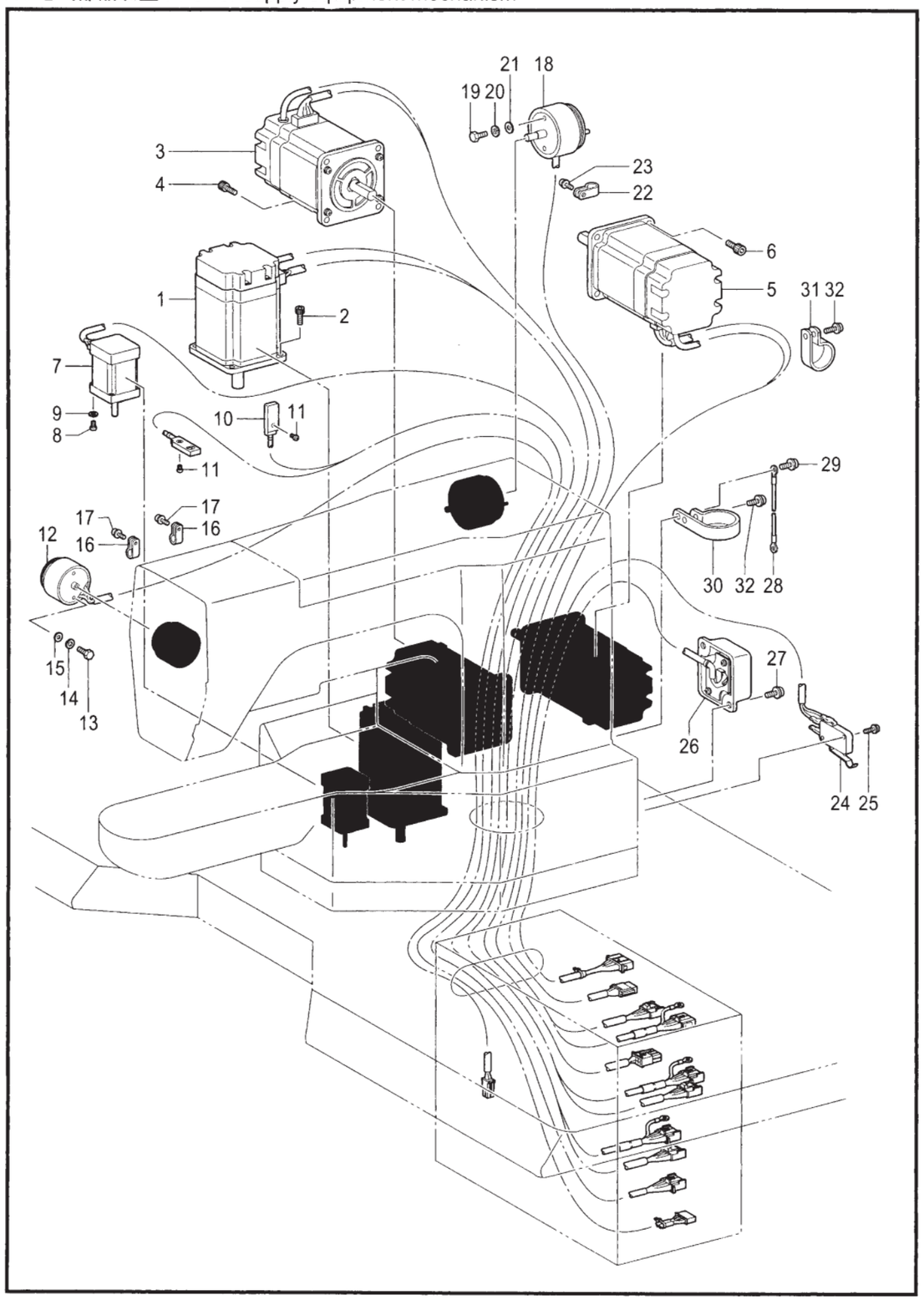

参照号	零部件序号	数量	零部件名称	NAME OF PARTS	RM
1	CSA3465101	1	脉冲马达组件 X	PULSE MOTOR ASSY,X	
2	C018401036	4	螺栓 M4X10	BOLT, SOCKET M4X10	
3	CSA3469101	1	脉冲马达组件 Y	PULSE MOTOR ASSY,Y	
4	C018400836	4	螺栓 M4X8	BOLT, SOCKET M4X8	
5	CSA3472101	1	脉冲马达组件 P	PULSE MOTOR ASSY,P	
6	C018401036	4	螺栓 M4X10	BOLT, SOCKET M4X10	
7	CSA4127001	1	夹线组件	PULSE MOTOR ASSY,THREAD CATCH	
8	C062300816	4	螺钉 M3X8	SCREW, PAN M3X8	
9	C028030246	4	弹簧垫圈 2-3	WASHER, SPRING 2-3	
10	CSA3477001	1	夹线原点传感器组件	HOME POSITION SENSOR THREAD-C	
11	C062300816	2	螺钉 M3X8	SCREW, PAN M3X8	
12	CSA4347001	1	松线电磁铁祖件	TENSION RELEASE SOLENOID,ASSY	
13	C017400802	2	螺栓 M4X8	BOLT, M4X8	
14	C028040246	2	弹簧垫圈 2-4	WASHER,SPRING 2-4	
15	C025040236	2	平垫圈 M4	WASHER,PLAIN M4	
16	C149547000	2	压线板	CORD HOLDER, 4N	
17	C0A5401006	2	螺栓(带垫圈) M4X10DB	SCREW, PAN (S/P WASHER) M4X10	
18	CSA4348001	1	切线电磁铁组件	THREAD TRIMMER SOLENOID,ASSY	
19	C017400802	2	螺栓 M4X8	BOLT, M4X8	
20	C028040246	2	弹簧垫圈 2-4	WASHER,SPRING 2-4	
21	C025040236	2	平垫圈 M4	WASHER,PLAIN M4	
22	C146202000	1	尼龙线夹 6N	CORD HOLDER, 6N	
23	C0A5401006	2	螺栓(带垫圈) M4X10DB	SCREW, PAN (S/P WASHER) M4X10	
24	CSA3481001	1	机头开关组件	SWITCH ASSY,MACHINE HEAD	
25	C0A5301605	2	螺栓(带垫圈) M3X16DB	SCREW,PAN(S/P WASHE) M3X16	
26	CSA3523101	1	机头检出器复合件	HEAD DETECTOR UNIT,ASSY	
27	C0A5401006	2	螺栓(带垫圈) M4X10DB	SCREW, PAN (S/P WASHER) M4X10	
28	CSA3486001	1	地线 350	GROUND WIRE,350	
29	C0A5401006	2	螺栓(带垫圈) M4X10DB	SCREW, PAN (S/P WASHER) M4X10	
30	CS11817000	1	挂钩	CLAMP, NK-18N	
31	C554482000	1	电线夹 #12	CORD HOLDER, #12	
32	C0A5401006	2	螺栓(带垫圈) M4X10DB	SCREW, PAN (S/P WASHER) M4X10	

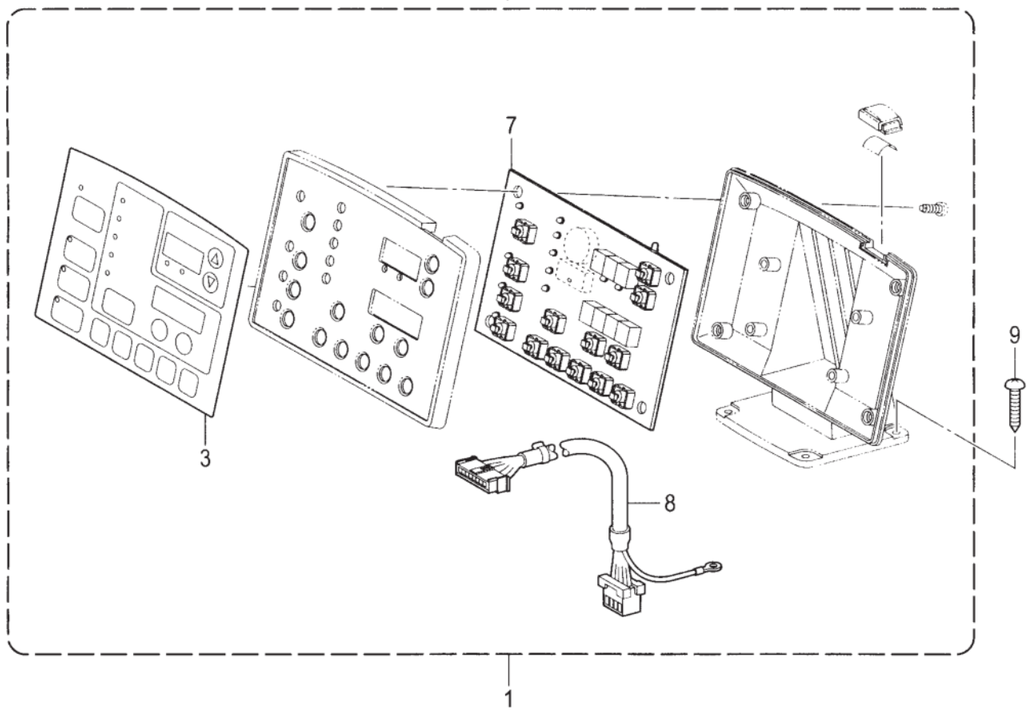

参照号	零部件序号	数量	零部件名称	NAME OF PARTS	RM
1	CSA3829001	1	操作盘组件	OPERATION PANEL ASSY	
3	CSA3831001	1	操作盘面板	PANEL SHEET	
7	CSA3833101	1	操作盘基板组件	PANEL PCB ASSY	
8	CSA3839001	1	电线	PANEL HARNESS	
9	C0B0452006	4	圆头木螺钉 M4.5X20	WOOD SCREW ROUND M4.5X20	

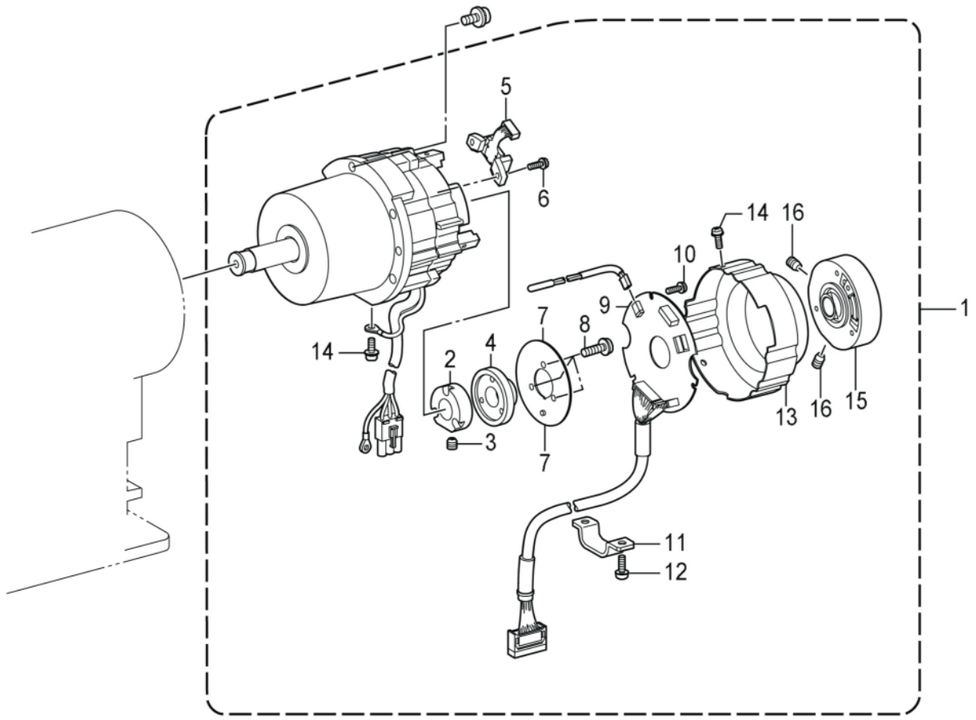

参照号	零部件序号	数量	零部件名称	NAME OF PARTS	RM
1	CJ80991001	1	马达组件 CDD-430D	MOTOR ASSY, CDD-430D	
2	CJ03955001	1	磁鼓 CDD	DRUM CDD	
3	C014400632	1	螺钉 M4X6	SET SCREW, SOCKET (CP) M4X6	
4	CJ03956001	1	磁铁 180P36	MAGNET 180P36	
5	CJ03957001	1	MR感应器组件 180P	MR SENSOR ASSY 180P	
6	C0A4300805	1	螺栓(带垫圈) M3X8DA	SCREW, PAN (S/P WASHER) M3X8	
7	CJ03958001	1	屏蔽板 CDD	SHIELD PLATE CDD	
8	C0A4261005	3	螺栓(带垫圈) M2.6X10DA	SCREW, PAN (S/P WASHE) M2.6X10	
9	CJ04488001	1	ENC 基板组件 430D#2	ENC PCB ASSY, 430D#2	
10	C0A5300606	3	螺栓(带垫圈) M3X6DB	SCREW, PAN (S/P WASHER) M3X6	
11	CJ04230001	1	电线固定夹 CDD-HT	CORD HOLDER, CDD-HT	
12	C0A4401005	3	螺栓(带垫圈) M4X10DA	SCREW, PAN (S/P WASHE) M4X10	
13	CJ04388001	1	编码器盖 430D	ENCODER COVER, 430D	
14	C0A4300805	3	螺栓(带垫圈) M3X8DA	SCREW, PAN (S/P WASHER) M3X8	
15	CJ04303001	1	同步轮组件 430D	PULLEY HOLDER ASSY, 430D	
16	C014500632	2	螺钉 M5X6	SET SCREW, SOCKET (CP) M5X6	

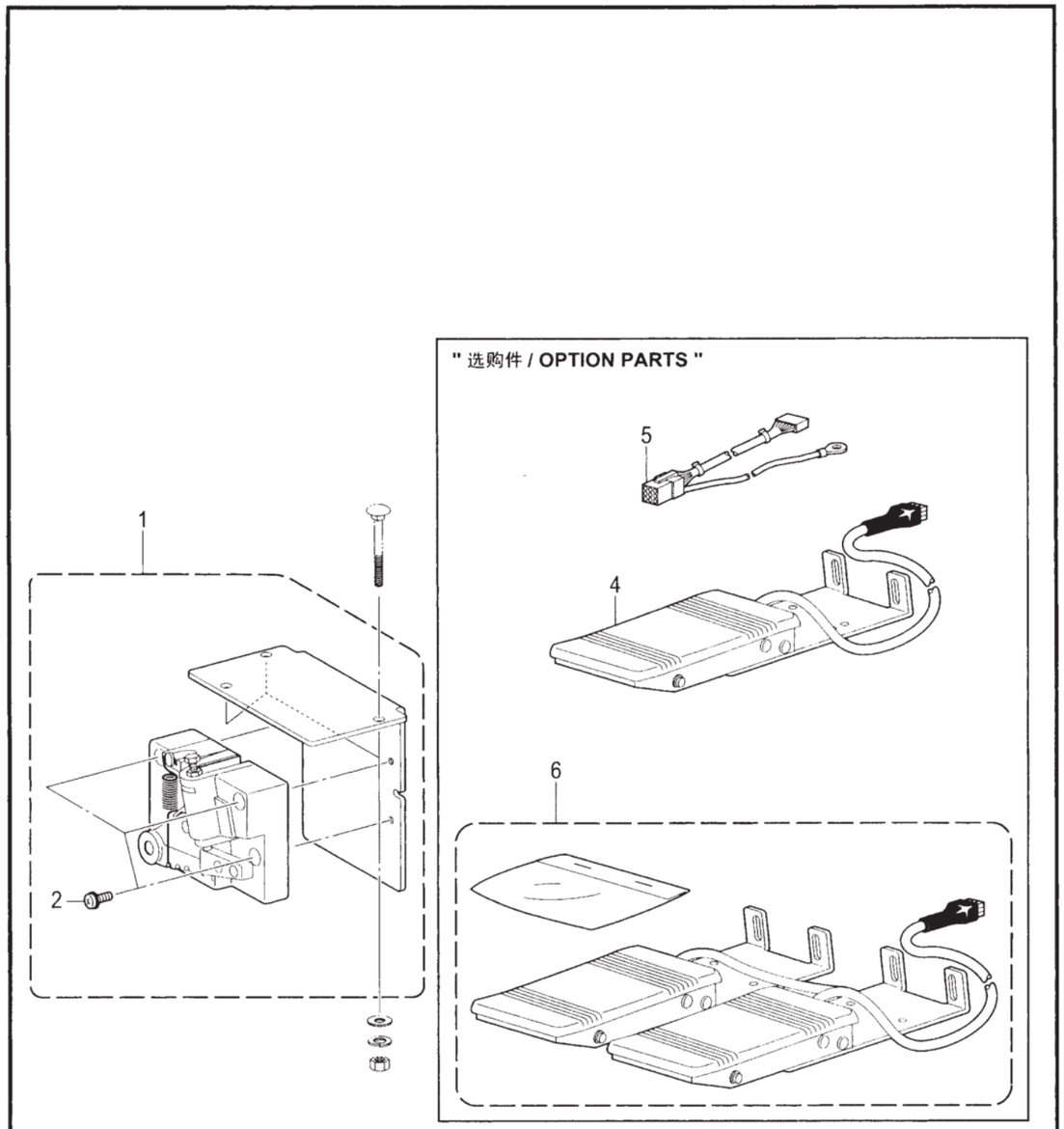

参照号	零部件序号	数量	零部件名称	NAME OF PARTS	RM
1	CSA3519101	1	踏板复合件 A	TREADLE UINT,A ASSY	
2	C0A4501005	3	螺栓(带垫圈) M5X10DA	SCREW, PAN (S/P WASHE) M5X10	
			"选购件"	"OPTION PARTS"	
5	CSA3784001	1	脚开关变换配线	CONVERSION HARNESS,FOOT SW	
4	CS49668101	1	2挡脚开关组件	2-STEP FOOT SWITCH ASSY	
6	CS51846101	1	2连3脚开关复合件	2-PEDAL FOOT SWITCH SET, 3	

V1 . 辅助装置(用于SP-438D 的选购零部件) / Auxiliary device (Option parts forSP–438D)

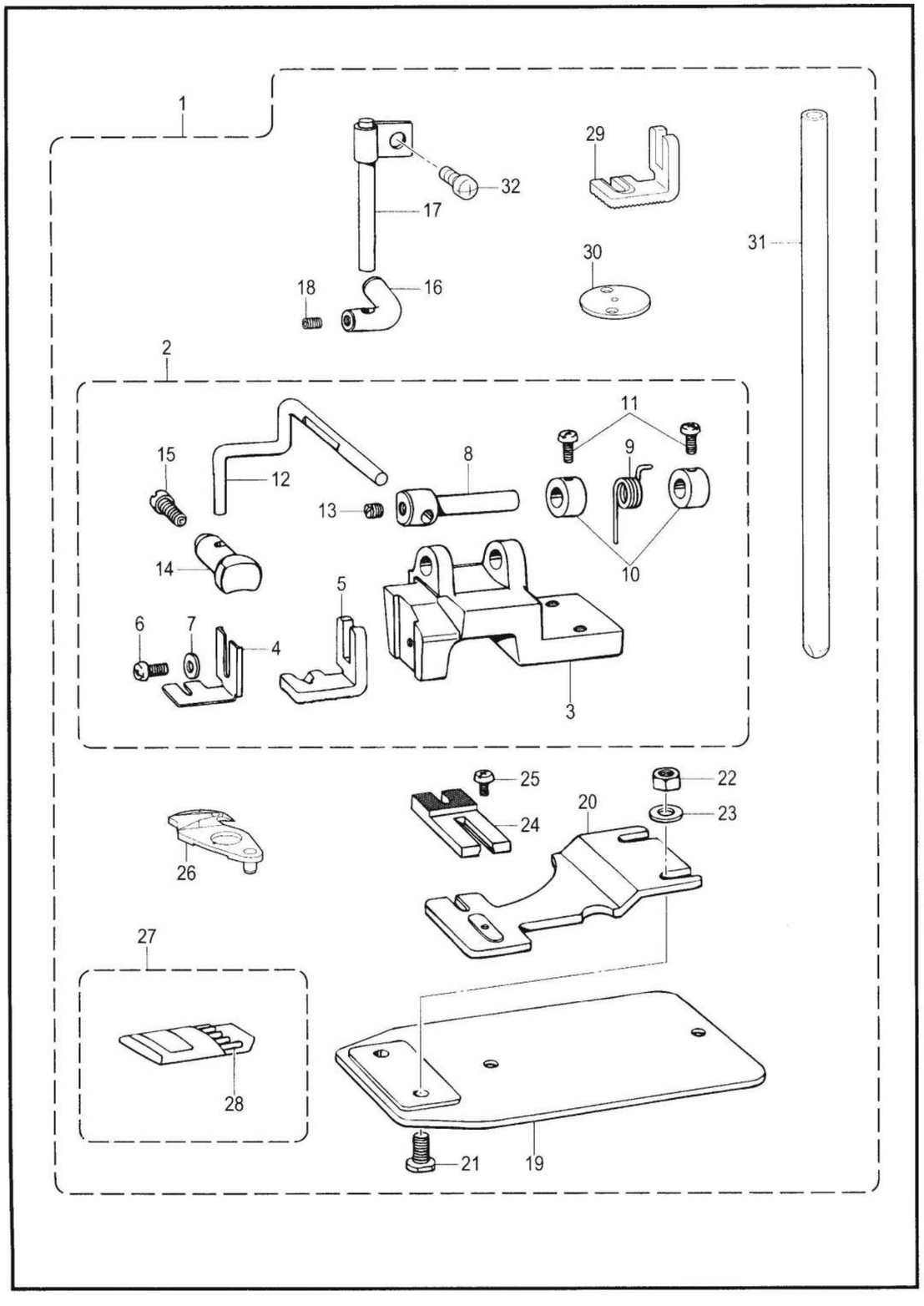

V1. 辅助装置(用于 SP -438D的选购零部件) / Auxiliary device (Option parts fo SP -438D)

参照号	零部件序号	数量	零部件名称	NAME OF PARTS	RM
1	CSA6492001	1	带柄钮扣装置组件 438D	SHANK DEVICE SET 438D	
2	C142689309	1	有柄钮扣夹体组件	SHANK BUTTON CLAMP BRAC. ASSY	
3	C154684009	1	有柄钮扣夹体	SHANK BUTTON CLAMP BRACKET	
4	C142677101	1	钮夹 A	BUTTON CLAMP, A	
5	C142678101	1	钮夹 B	BUTTON CLAMP, B	
6	C062670812	1	螺钉 SM3.57-40X8	SCREW PAN SM3.57-40X8	
7	C102707002	1	垫圈 4	WASHER	
8	C142681001	1	扣夹轴	BUTTON CLAMP STUD	
9	C154685001	1	弹簧	SPRING	
10	C142706001	2	紧圈	SET SCREW COLLAR	
11	C062670712	2	螺钉 SM3.57-40X7	SCREW PAN SM3.57-40X7	
12	C154686001	1	扣夹臂	BUTTON CLAMP ARM	
13	C013719412	1	固定螺钉 SM4.76	SET SCREW, (CP) SM4.76	
14	C142680001	1	扣夹	BUTTON CLAMP	
15	C120990001	1	螺钉 SM4.37-40X8	SET SCREW, (CP) SM4.37-40X8	
16	C154695001	1	扣夹松开	CLAMP OPENER	
17	C154696001	1	扣夹松开轴	STUD	
18	C014680432	1	螺钉 SM4.37-40X4	SET SCREW SOCKET SM4.37-40X4	
19	C154697001	1	送布板台	FEED PLATE BASE	
20	C156336101	1	送扣板	SHANK BUTTON FEED PLATE	
21	C154713001	2	螺钉 SM4.76	SCREW, SM4.76	
22	C021710212	2	螺母 SM4.76-32	NUT 2 SM4.76-32	
23	C025710232	2	平垫圈 SM4.76	WASHER PLAIN M SM4.76	
24	C142686101	1	放料台 S	CLOTH RECEIVER, S	
25	C060670512	1	螺钉 SM3.57-40X5	SCREW BIND SM3.57-40X5	
26	CSA6493001	1	动刀组件 F-SCL	MOVABLE KNIFE F-SCL ASSY	
27	CSA6505014	1	机针(10支装) SA6506	NEEDLE 10PIECE ASSY SA6506	
28	CSA6506014	10	机针 TQX3	NEEDLE TQX3	
29	CS03641101	1	钮夹 D	BOTTON CLAMP, D	
30	CSA3645201	1	针孔板 2.2SC	NEEDLE HOLE PLATE 2.2SC	
31	CSA6504001	1	针杆 B	NEEDLE BAR B	
32	C062500616	1	螺钉 M5X6	SCREW PAN M5X6	

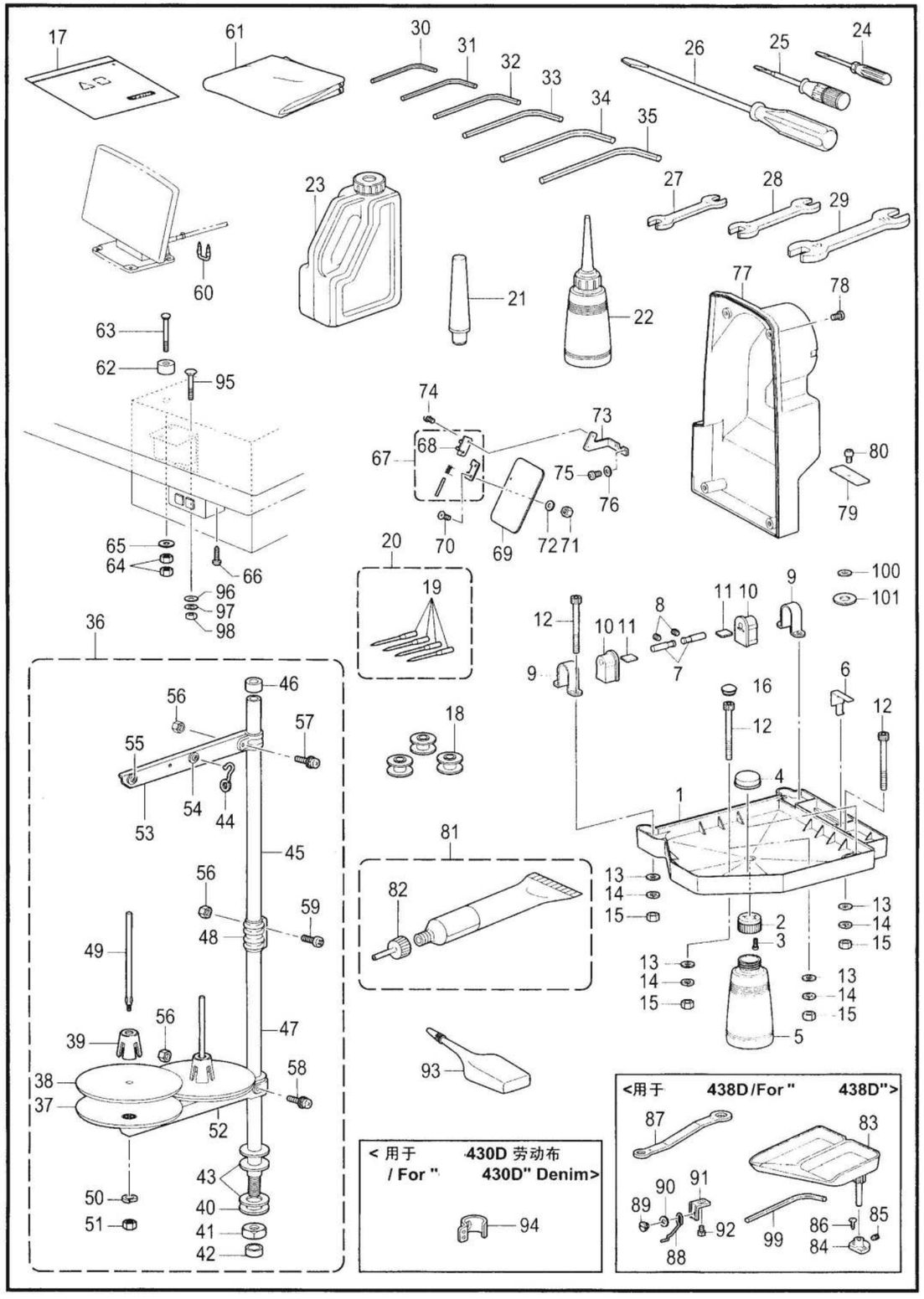

参照号	零部件序号	数量	零部件名称	NAME OF PARTS	RM
1	CSA3383001	1	油盘	OIL PAN	
2	C 154467001	1	废油回收壶盖	DUST OILER	
3	C 037301215	2	螺销 M3X12	TAPPING SCREW, PAN V M3X12	
4	CSA3540001	2	缓冲橡皮垫	RUBBER CUSHION	
5	C 114486002	1	油壶	OILER	
6	CSA3820001	1	弹簧	SPRING;HEAD	
7	CSA3384001	2	机头支承销	PIN	
8	C 012060636	2	螺钉 M6X6	SET SCREW, SOCKET (FT) M6X6	
9	CSA3385001	2	头部铰链座	HINGE HOLDER	
10	CSA3395001	2	橡皮铰链	RUBBER CUSHION	
11	CSA3392001	2	垫片	SPACER	
12	CSA3387001	7	螺栓 M6X75	BOLT,SOCKET M6X75	
13	C 025060336	7	平垫圈 L6	WASHER, PLAIN L 6	
14	C 028060246	7	弹簧垫圈 2-6	WASHER, SPRING 2-6	
15	C 021060106	7	螺母 M6	NUT, 1 M6	
16	CS32264001	2	橡皮塞 11.5	RUBBER CAP, 11.5	
17	C 122991001	1	附属品塑料袋	ACCESSORY BAG	
18	C* P. 53	3	梭芯	BOBBIN	
19	C* P. 54	4	机针	NEEDLE	
20	C* P. 54	1	机针组(4支装)	NEEDLE 4PIECE ASSY	
21	CSA3380001	1	机头撑杆	HEAD REST	
22	C 114483002	1	油壶组件	OILER ASSY	
23	CS55663001	1	油罐组件	OIL TANK ASSY	
24	C 142443001	1	小起子 1.9X52	SCREW-DRIVER, 1.9X52	
25	C 118837001	1	起子 3.4X70	SCREW-DRIVER, 3.4X70	
26	C 101572101	1	起子 5.5X190	SCREW-DRIVER, 5.5X190	
27	C 107779001	1	扳手 6X7	WRENCH, 6X7	
28	C 100887001	1	双头扳手 8X9	WRENCH, 8X9	
29	C 107780001	1	扳手 10X12	WRENCH, 10X12	
30	CS07783001	1	内六角扳手 1.5	HEXAGONAL WRENCH, 1.5	
31	C 142002001	1	内六角扳手 2	HEXAGONAL WRENCH, 2	
32	C 154125001	1	内六角扳手 2.5	HEXAGONAL WRENCH, 2.5	
33	C 142721001	1	内六角扳手 3	HEXAGONAL WRENCH, 3	
34	C 118064001	1	内六角扳手 4	HEXAGONAL WRENCH, 4	
35	C 150335001	1	内六角扳手 5	HEXAGONAL WRENCH, 5	
36	CS02763502	1	线架组件 2DR	COTTON STAND ASSY, 2DR	
37	CS51283001	2	垫圈	SPOOL STAND BASE	
38	C 150182000	2	线盘软垫	SPOOL MAT	
39	CS51282101	2	线轴缓冲架	SPOOL CUSHION	
40	C 150206002	1	平垫圈 16	WASHER, PLAIN 16	
41	CS38648001	1	螺母 U5/8-28	NUT, U5/8-28	
42	C 150174000	1	线架支撑管套	COLUMN CAP	
43	CS01005000	2	橡皮垫圈	RUBBER WASHER	
44	CS02747101	1	弹簧	SPRING	
45	C 150172003	1	线架支撑管	COLUMN PIPE	
46	C 150174000	1	线架支撑管套	COLUMN CAP	
47	C 156112003	1	线架撑管 D	COLUMN PIPE, D	
48	C 150173003	1	撑管夹	COLUMN JOINT	
49	C 150179002	2	线轴 B	SPOOL SHAFT, B	
50	C 028050246	2	弹簧垫圈 2-5	WASHER, SPRING 2-5	
51	C 021500106	2	六角螺母 M5	NUT, 1 M5	
52	CS02778002	1	插线架 2	SPOOL HOLDER, 2	
53	CS02787002	1	过线架 2	THREAD HANGER, 2	
54	C 150183000	2	过线管套	THREAD HANGER BASE	
55	C 142990001	2	过线架上过线管	THREAD BUSH	
56	C 021500106	4	六角螺母 M5	NUT, 1 M5	
57	CS37038001	1	螺钉 M5X14	SCREW, PAN(S/P WASHER) M5X14	
58	CS37037001	1	螺钉 M5X32	SCREW, PAN (S/P WASHER) M5X32	
59	C 062501406	2	螺钉 M5X14	SCREW, PAN M5X14	
60	C 200190001	7	U形卡钉 10X20	STAPLE,10X20	

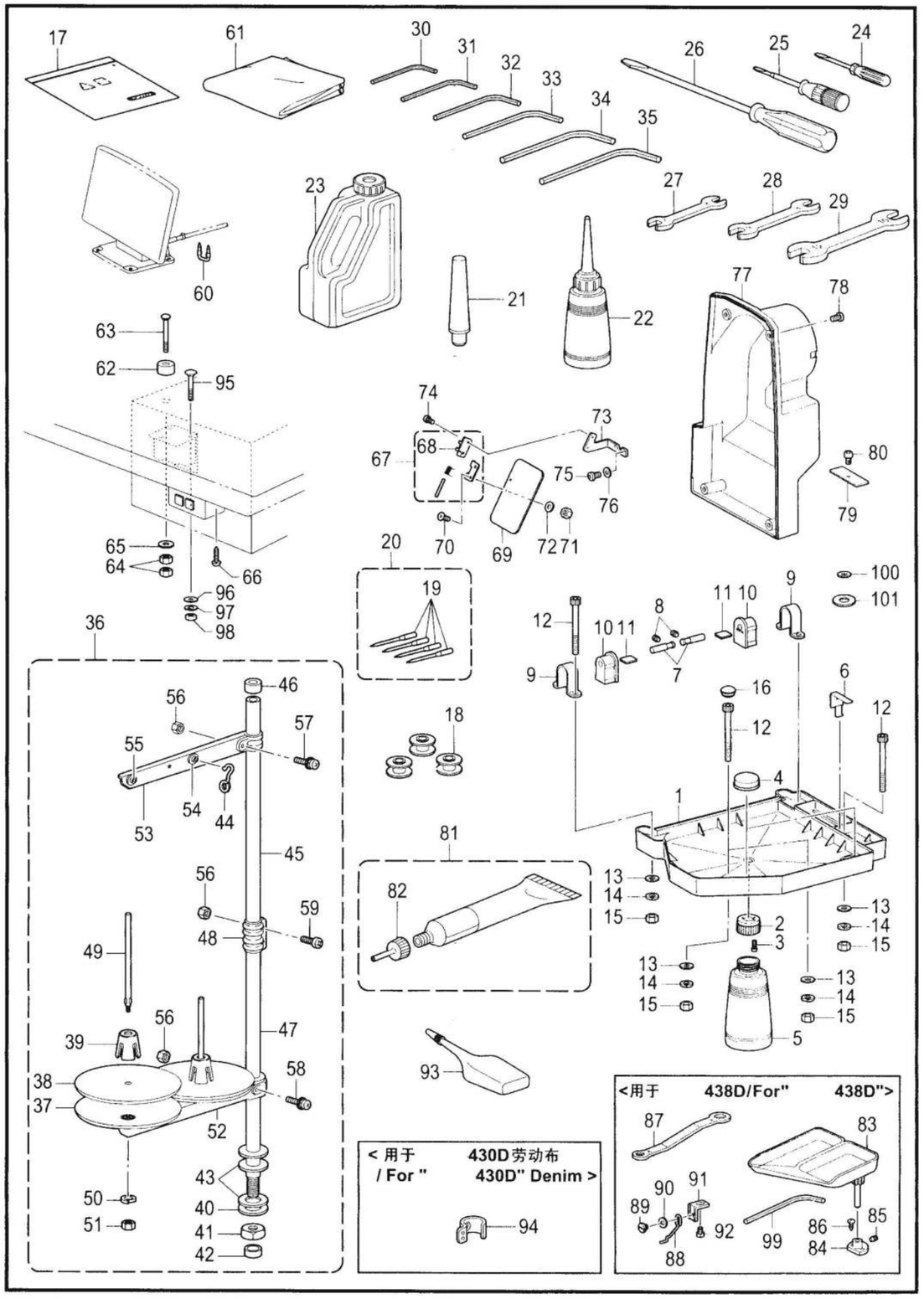

参照号	零部件序号	数量	零部件名称	NAME OF PARTS	RM
61	C144226001	1	机头罩	HEAD COVER	
			＜用于安装控制箱＞	<Setting the control box>	
62	CS33006001	4	马达垫片	MOTOR SPACER	
63	C133740006	4	螺栓 M6X70	BOLT, SQUARE M6X70	
64	C021060106	8	螺母 M6	NUT, 1 M6	
65	C025060336	4	平垫圈 L6	WASHER, PLAIN L 6	
			＜用于安装电源开关＞	<Setting the power switch>	
66	C032461606	2	木螺钉 M4.5X16	WOOD SCREW, ROUND 2 M4.5X16	
67	CS44483001	1	铰链组件	HINGE ASSY	
68	CS44484001	1	护眼板铰链	EYE GUARD HINGE	
69	CS44485001	1	护眼板	EYE GUARD	
70	C061300816	2	螺钉 M3X8	SCREW, FLAT M3X8	
71	C021300106	2	螺母 M3	NUT, 1 M3	
72	C026030236	2	垫圈 M3	WASHER, PLAIN M 3	
73	CSA4104001	1	护眼板架 A	EYE GUARD HOLDER, A	
74	C062300506	2	螺钉 M3X5	SCREW, PAN M3X5	
75	C062400616	2	螺钉 M4X6	SCREW, PAN M4X6	
76	C026040136	2	平垫圈 S4	WASHER, PLAIN S 4	
77	CSA3388001	1	后盖	BACK COVER	
78	C062061016	4	螺钉 M6X10	SCREW, PAN M6X10	
79	CSA3489001	1	送料板盖	FEED PLATE COVER	
80	C153057101	1	螺钉 SM4.37	SCREW, ROUND W/SOCKET SM4.37	
100	C148847001	1	垫圈	WASHER, PLAIN	
81	CSA2693001	1	润滑脂组件	GREASE UNIT	
82	CSA2695001	1	润滑脂注入口	GREASE NOZZLE	
93	CS06706001	1	硅油	SILICONE OIL	
			＜用于 438D＞	<For " 438D">	
83	CS18642009	1	钮扣盘	BUTTON TRAY	
84	C153843009	1	钮扣盘底座	BUTTTON TRAY HOLDER	
85	C014760632	1	螺钉 SM5.95-28X6	SET SCREW, SOCKET SM5.95-28X6	
86	C0B1351606	2	木螺钉 M3.5X16	WOOD SCREW, FLAT M3.5X16	
87	C105343001	1	扳手 8X9	DOUBLE WRENCH, 8X9	
88	C159939001	1	弹簧 A	SPRING, A	
89	C110215002	1	螺钉 SM3.57	SCREW SM3.57	
90	C025660132	1	平垫圈 S3.18	WASER PLAIN S 3.18	
91	C159938001	1	弹簧支架	SPRING SUPPORT	
92	C146360002	1	螺栓 SM4.76X7	BOLT, SM4.76X7	
99	C154179001	1	内六角扳手 4	HEXAGONAL WRENCH, 4(Short type)	
			＜用于 430D 劳动布＞	<For " 430D"Denim>	
94	CSA3635101	1	针杆线导向 B	NEEDLE BAR THREAD GUIDE,B	
			＜用于安装踏板复合件＞	<Setting the Treadle Unit>	
95	C119755001	3	螺拴 M6X60	BOLT, M6X60	
96	C025060236	3	平垫圈 M6	WASHER,PLAIN M 6	
97	C028060246	3	弹簧垫圈 2-6	WASHER,SPRING 2-6	
98	C021060106	3	螺母 M6	NUT,1 M6	
101	CSA6397001	1	垫片 0.2	M-KNIFE SPACER T0.2	
101	CSA3334001	1	垫片 0.3	M-KNIFE SPACER T0.3	
101	CSA6398001	1	垫片 0.4	M-KNIFE SPACER T0.4	

附件表可能有所变动。
The details of included accessories are subject to change.

名称 Part name / 规格 Spec.	CSM-430D -2	CSM-430D -1	CSM-430D -7	CSM-430D -0F	CSM-438D
(K-61) 针孔板 Needle hole plate	(φ2.4) CSA3336-101	(φ2.2) CSA3653-201	(φ1.6) CSA3652-201	(φ1.6) 入口处倒角 (φ2.6) CSA3646-201	(φ1.6) CSA6133-001
(F-41) 梭芯套组件 Bobbin case assy	C152690-501 < B >	C159610-401 < A >	C159610-401 < A >		C159610-401 < A >
	CS59221-201 < LC >				
(F-42) 夹线簧 Tension spring	C154340-101	C154339-101 < A >	C154339-101 < A >		C154339-101 < A >
	CS48664-001 ☆				
(F-43) 螺钉 Screw	C154341-001		C154341-001		C154341-001
	CS16492-101 < LA > ☆				
(F-44) 防空转弹簧 Anti-spin spring	CSA4315-001 < B >	CSA4315-001 < A >	CSA4315-001 < A >		CSA4315-001 < A >
	CS15667-001 < LA > ☆				
(F-45) 梭芯 Bobbin	C159613-051		C159613-051		C159613-051
	CS15665-001 < LA > ☆				
(F) 中旋梭组件 Shuttle hook assy, w/box	CSA1882-001 < B >	CSA1881-001 < A >	CSA1881-001 < A >		CSA1881-001 < A >
	CSA1890-201 < LG > ☆	CSA2173-201 < LF > ☆			
(F-40) 外旋梭 Shuttle race base	C152686-201 < B >	C152682-201 < A >			C152682-201 < A >
(H-14) 挑线弹簧 Spring,tension	C107606-101	C104525-101			C104525-101
(H-9) 调节弹簧 Thread take-up spring	C144588-201 < B >	C145519-201			C145519-201

名称 Part name / 规格 Spec.	CSM-430D -2	CSM-430D -1	CSM-430D -7	CSM-430D -0F	CSM-438D
(H-25, H-24) 针杆线导向 Needle bar thread guide A B	CSA3257-101	CSA3635-101			CSA3635-101
(Z-20) 机针组件(4支装) Needle assy	CSA1579-019	CSA1752-014		CSA1737-011	CSA1579-012
(B-34, Z19) 机针 Needle	DP×17 NY < #19 > CS37928-019	DP×5 < #14 > C107415-014	DP×5 < #9 > C107415-009	DP×5KN < #11 > C154763-011	DP×17NY < #12 > CS37928-012

◎标准的压脚和送布板的尺寸表示如下。(实际的缝纫范围是在内框向内1.5㎜内侧处)

◎Standard sizes for work clamps and feed plates are as follows:

(The actual sewing area has 1.5mm margin on every size; inside the lines which the dimensions indicate.)

规格 / Spec.	CSM-430D -2	CSM-430D -1	CSM-430D -7	CSM-430D -0F	CSM-438D
R	C153608-101	C152777-001	CS49695-001	CSA6509-001	
L	C154527-001	C152778-001	CS49694-001	CSA6510-001	
(C-68, 69) 压脚 Work clamp	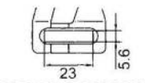	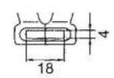	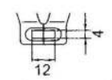	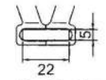	
(C-28) 送布板 Feed plate	CSA3378-001 (用于 3mm) (For 3mm use)	CSA3607-001 (用于 2mm) (下沉式 L Submerged-type, L)	CSA3609-001 (用于 2mm) (For 2mm use)	CSA6511-001	CSA3606-001
	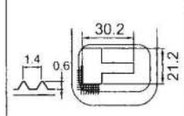	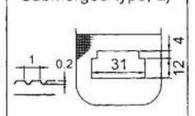	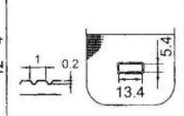	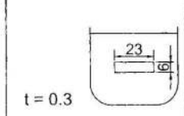	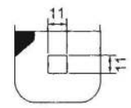

规格 / Spec.	-2
R	C152781-001
L	C152782-001
(C-68, 69) 压脚 Work clamp	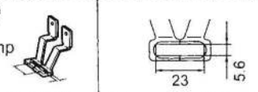
(C-28) 送布板 Feed plate	CSA3611-001 (用于 3mm) (For 3mm use)
	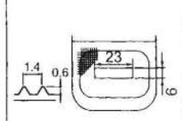

	1	2	3	4
R	C152781-001 (劳动布 / For denim)	C153201-001 < PL >	C153203-001 < PS >	CS00906-001 (1 inch)
L	C152782-001 (劳动布 / For denim)	C153202-001 < PL >	C153204-001 < PS >	CS00907-001 (1 inch)
(C-68, 69) 压脚 Work clamp	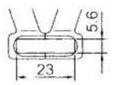	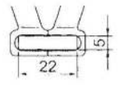	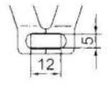	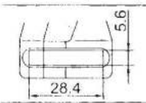
(C-28) 送布板 Feed plate	CSA3611-001 (劳动布 / For denim)	CSA3612-001 < PL >	CSA3613-001 < PS >	CSA3614-001 (1 inch)
	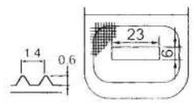	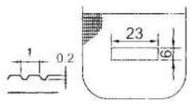	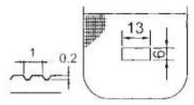	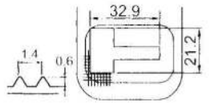

	5	6	7	8
R	CS33747-001 (30mm)	C153201-001 (劳动布 / For denim)	C152777-001 < PM >	C152779-001 (针织品 / For knitted materials)
L	CS33748-001 (30mm)	C153202-001 (劳动布 / For denim)	C152778-001 < PM >	C152780-001 (针织品 / For knitted materials)
(C-68, 69) 压脚 Work clamp	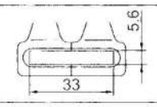	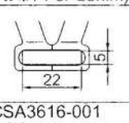	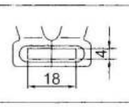	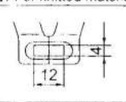
(C-28) 送布板 Feed plate	CSA3615-001 (30mm)	CSA3616-001 (劳动布 / For denim)	CSA3612-001 (PL)	CSA3608-001 (针织品 / For knitted materials)
	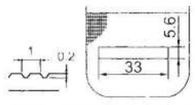	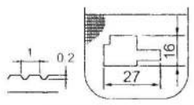	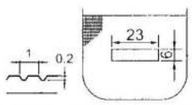	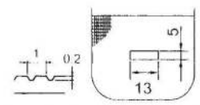

	9	10	11	12
R	CS46771-001 (横打结 / For straight bar tacking)	CS46771-001 (横线结 · 下沉 / For straight bar tacking/submerged)	CS46774-001 (垂直打结 / For vertical bar tacking)	CS46774-001 (垂直线结 · 下沉 / For vertical bar tacking/submerged)
L	CS46770-001 (横打结 / For straight bar tacking)	CS46770-001 (横线结 · 下沉 / For straight bar tacking/submerged)	CS46773-001 (垂直打结 / For vertical bar tacking)	CS46773-001 (垂直线结 · 下沉 / For vertical bar tacking/submerged)
(C-68, 69) 压脚 Work clamp	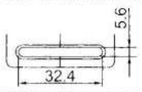	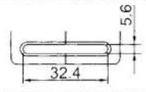		
(C-28) 送布板 Feed plate	CSA3617-001 (横打结 / For straight bar tacking)	CSA3618-001 (横线结 · 下沉 / For straight bar tacking/submerged)	CSA3619-001 (垂直打结 / For vertical bar tacking)	CSA3621-001 (垂直线结 · 下沉 / For vertical bar tacking/submerged)
	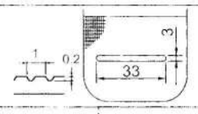	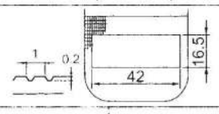	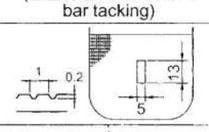	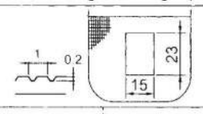
(C) 压脚 Work clamp 螺栓 Bolt	C156006-001 CS59892-001	C156006-001 CS59892-001	C156006-001 CS59892-001	C156006-001 CS59892-001
	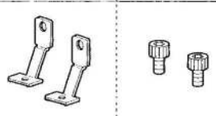	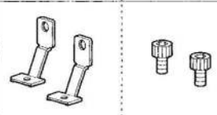	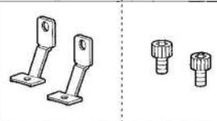	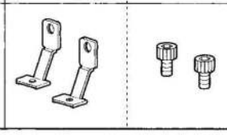

	13	14	15	16
R	CSA2230-001 (垂直打结 / For vertical bar tacking)	CSA2233-001 (垂直打结 / For vertical bar tacking)	C152779-001 (下沉式 S / Submerged -type,S)	C152779-001
L	CSA2229-001 (垂直打结 / For vertical bar tacking)	CSA2232-001 (垂直打结 / For vertical bar tacking)	C152780-001 (下沉式 S / Submerged -type,S)	C152780-001
(C-68, 69) 压脚 Work clamp	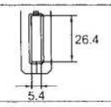	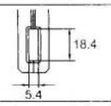	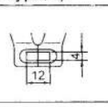	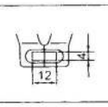
(C-28) 送布板 Feed plate	CSA3620-001 (垂直打结 / For vertical bar tacking)	CSA3622-001 (垂直打结 / For vertical bar tacking)	CSA3610-001 (下沉式 S / Submerged -type,S)	CSA6346-001
	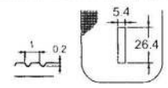	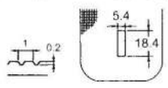	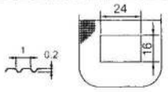	t = 0.3 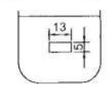
(C) 压脚 Work clamp 螺栓 Bolt	CS59909-001 C017680-512	CS59909-001 C017680-512		
	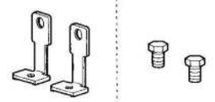	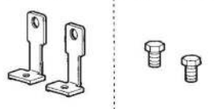		

	17	18	19
R	CS46777-001 (菊孔形 / For circular stitching)	CS46780-001 (半月形 / For crescent bar tacking)	CSA2236-001 (半月形 / For crescent bar tacking)
L	CS46776-001 (菊孔形 / For circular stitching)	CS46779-001 (半月形 / For crescent bar tacking)	CSA2235-001 (半月形 / For crescent bar tacking)
(C-68, 69) 压脚 Work clamp			
(C-28) 送布板 Feed plate	CSA3623-001 (菊孔形 / For circular stitching)	CSA3624-001 (半月形 / For crescent bar tacking)	CSA3625-001 (半月形 / For crescent bar tacking)
(C) 压脚 Work clamp 螺栓 Bolt	C156006-001 CS59892-001	C156006-001 CS59892-001	CS59909-001 C017680-512

Ga . 工模具一览表 (SP -430D, SP -438D) / Gauge parts list (SP -430D, SP -438D)

	CSA3626-001 有滚花 / With lozenge	CSA3627-001 有滚花 / With lozenge
(C) 送布板 半成品 Feed plate blank	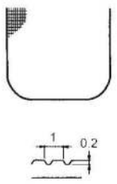	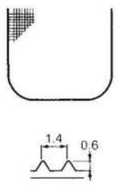

(K-61) 其他针孔板 / For other needle hole plate

CSM-430D			CSM-438D
CSA3645-201	CSA3646-201	CSA5221-001	CSA3654-201
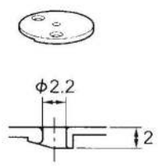	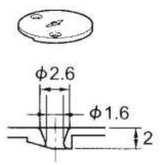	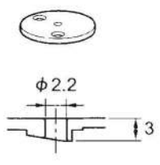	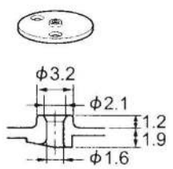

特别订货 / For specially orderd

	-1
R	CSA4195-001
L	CSA4196-001
(C) 压脚半成品 Work clamp blank	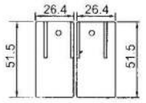

	CS59909-001	C017680-512
(C) 压脚 Work clamp 螺栓 Bolt		

	CSA3817-001 无滚花 / Without lozenge
(C) 送料板 半成品 Feed plate blank	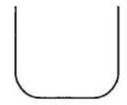

(E) 选购件 / OPTION PARTS

钮夹垫 / Button clamp spacer

AL	CS52071-001(E-39)	BL	CS52072-001(E-41)	CL	CS52073-001(E-43)	DL	CS52074-001(E-45)
AR	CS52075-001(E-40)	BR	CS52076-001(E-42)	CR	CS52077-001(E-44)	DR	CS52078-001(E-46)
	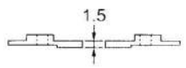		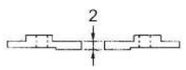		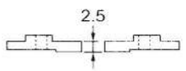		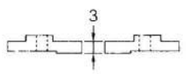

索引 / INDEX

CODE	REF.NO	Page
C004300513	A - 12	2
C011679312	E - 16	12
C012060536	C - 45	6
	D - 32	10
	D - 38	10
	F - 6	14
C012060636	B - 26	4
	C - 8	6
	C - 13	6
	C - 15	6
	C - 19	6
	C - 27	6
	D - 13	10
	D - 22	10
	D - 28	10
	D - 48	10
	F - 9	14
	F - 16	14
	F - 35	14
	H - 28	18
	K - 37	22
	K - 49	22
	L - 2	26
	N - 10	30
	Z - 8	50
C012300336	B - 21	4
	B - 24	4
C012400436	F - 12	14
	J - 17	20
	J - 23	20
	K - 11	22
	K - 17	22
	N - 5	30
	N - 22	30
C012500536	B - 23	4
	B - 37	4
	C - 4	6
	C - 46	6
	C - 65	8
	D - 12	10
	D - 20	10
	D - 25	10
	F - 11	14
	F - 47	14
	J - 3	20
	J - 34	20
	L - 6	26
	L - 10	26
	L - 17	26
C013719412	V1 - 13	46
C014400632	T - 3	42
C014500632	T - 18	42
C014680432	V1 - 18	46
C014680632	E - 3	12
C014760632	E - 9	12
	Z - 85	52
C017400802	R - 13	38
	R - 19	38
C017401015	M - 3	28
C017680512	Ga	56
	Ga	57
C017711412	E - 10	12
C018061236	C - 31	6

CODE	REF.NO	Page
C018061236	C - 36	6
	D - 35	10
	N - 2	30
	N - 16	30
C018061636	C - 70	8
	D - 44	10
C018063036	C - 6	6
C018063536	C - 34	6
C018300636	N - 24	30
C018400836	C - 72	8
	R - 4	38
C018401036	C - 21	6
	R - 2	38
	R - 6	38
C018401636	B - 29	4
C018500836	C - 48	6
	C - 56	6
C018501232	F - 39	14
	K - 40	22
C018501636	B - 3	4
	B - 40	4
C021060106	K - 26	22
	K - 30	22
	K - 43	22
	Z - 15	50
	Z - 64	52
	Z - 98	52
C021060306	K - 28	22
	K - 45	22
C021300106	Z - 71	52
C021400216	D - 42	10
C021400306	M - 4	28
C021500106	Z - 51	50
	Z - 56	50
C021710212	V1 - 22	46
C025030236	A - 18	2
	K - 60	24
	K - 70	24
	N - 25	30
C025040236	D - 41	10
	L - 22	26
	R - 15	38
	R - 21	38
C025050134	L - 13	26
C025050236	C - 50	6
	M - 8	28
C025060236	C - 32	6
	C - 37	6
	C - 71	8
	D - 45	10
	Z - 96	52
C025060336	Z - 13	50
	Z - 65	52
C025660132	Z - 90	52
C025710232	V1 - 23	46
C026030136	F - 24	14
C026030236	Z - 72	52
C026040136	Z - 76	52
C028030246	K - 59	24
	R - 9	38
C028040246	R - 14	38
	R - 20	38
C028050246	C - 49	6

CODE	REF.NO	Page
C028050246	K - 74	22
	Z - 50	50
C028060246	Z - 14	50
	Z - 97	52
C032461606	Z - 66	52
C037301215	Z - 3	50
C047250642	E - 22	12
C047301042	D - 27	10
C047602042	D - 4	10
C048040342	K - 18	22
	L - 14	26
	L - 23	26
	M - 7	28
C048050342	J - 10	20
	J - 19	20
C048060342	C - 12	6
C048060346	C - 43	6
	D - 30	10
C048070342	F - 37	14
	N - 9	30
C048080142	C - 18	6
	K - 36	22
C048080342	D - 11	10
	D - 24	10
	L - 9	26
C060400516	K - 6	22
C060670512	V1 - 25	46
C061300816	Z - 70	52
C062060816	G - 9	16
	G - 28	16
C062061016	A - 6	2
	D - 50	10
	G - 3	16
	J - 35	20
	Z - 78	52
C062300416	A - 17	2
	B - 5	4
	K - 58	24
	K - 69	24
C062300506	Z - 74	52
C062300616	F - 25	14
C062300816	R - 8	38
	R - 11	38
C062350616	J - 8	20
C062400616	G - 7	16
	G - 11	16
	Z - 75	52
C062400806	B - 39	4
C062400816	B - 41	4
	K - 4	22
C062401006	A - 20	2
	L - 21	26
C062401216	J - 13	20
C062500616	H - 2	18
	H - 4	18
	H - 6	18
	J - 29	20
	V1 - 32	46
C062501016	A - 9	2
C062501406	Z - 59	50
C062670412	H - 31	18
C062670712	V1 - 11	46
C062670812	V1 - 6	46

CODE	REF.NO	Page
C062680512	E - 25	12
C062680812	E - 29	12
C070608800	C - 17	6
C070688850	D - 33	10
C070696800	D - 18	10
C071031840	C - 73	8
C081003670	F - 18	14
C081005070	L - 15	26
C081007070	M - 12	28
C0A4261005	T - 8	42
C0A4300805	N - 19	30
	T - 6	42
	T - 16	42
C0A4401005	T - 14	42
C0A4501005	U - 2	44
C0A5300606	T - 12	42
C0A5301605	R - 25	38
C0A5401006	R - 17	38
	R - 23	38
	R - 27	38
	R - 29	38
	R - 32	38
C0B0452006	S - 9	40
C0B1351606	Z - 86	52
C100136001	H - 20	18
C100360003	K - 62	24
C100401021	J - 31	20
C100402004	H - 17	18
C100887001	Z - 28	50
C101572101	Z - 26	50
C102630001	D - 8	10
C102707002	M - 5	28
	V1 - 7	46
C104449001	A - 8	2
C104525101	Sp	53
C104821001	A - 3	2
C105234003	E - 8	12
C105343001	Z - 87	52
C107415009	Sp	54
C107415014	Sp	54
C107606101	Sp	53
C107741001	D - 40	10
	E - 6	12
C107779001	Z - 27	50
C107780001	Z - 29	50
C109239002	A - 15	2
C110215002	Z - 89	52
C110367001	B - 20	4
	C - 42	6
C114483002	Z - 22	50
C114486002	Z - 5	50
C115147001	E - 14	12
C115148201	E - 13	12
C115156001	E - 21	12
C115158001	E - 26	12
C115164101	E - 33	12
C115165001	E - 34	12
C115166001	E - 35	12
	V2 - 9	48
C117608001	A - 24	2
C117934001	A - 2	2
C118064001	Z - 34	50
C118837001	Z - 25	50

CODE	REF.NO	Page
C119755001	Z - 95	52
C120448001	J - 22	20
C120990001	V1 - 15	46
C122991001	Z - 17	50
C133740006	Z - 63	52
C140392009	A - 1	2
	A - 4	2
C142002001	Z - 31	50
C142443001	Z - 24	50
C142677101	V1 - 4	46
C142678101	V1 - 5	46
C142680001	V1 - 14	46
C142681001	V1 - 8	46
C142686101	V1 - 24	46
C142689309	V1 - 2	46
C142706001	V1 - 10	46
C142721001	Z - 33	50
C142990001	Z - 55	50
C143671000	G - 21	16
C144226001	Z - 61	52
C144458001	B - 31	4
C144588201	Sp	53
C145446001	H - 16	18
	H - 22	18
	J - 30	20
C145465001	B - 25	4
C145519201	Sp	53
C146080000	G - 24	16
C146202000	R - 22	38
C146352002	K - 75	22
C146354001	E - 11	12
C146354002	C - 55	6
C146360002	Z - 92	52
C146994001	E - 12	12
C148847001	Z - 100	52
C149547000	R - 16	38
C150172003	Z - 45	50
C150173003	Z - 48	50
C150174000	Z - 42	50
	Z - 46	50
C150179002	Z - 49	50
C150182000	Z - 38	50
C150183000	Z - 54	50
C150206002	Z - 40	50
C150335001	Z - 35	50
C151968001	E - 4	12
C151969001	E - 5	12
C152682201	Sp	53
C152684101	F - 23	14
C152686201	Sp	53
C152690501	Sp	53
C152744001	D - 7	10
C152777001	Sp	54
	Ga	55
C152778001	Sp	54
	Ga	55
C152779001	Ga	55
	Ga	56
C152780001	Ga	55
	Ga	56
C152781001	Sp	54
	Ga	55
C152782001	Sp	54

CODE	REF.NO	Page
C152782001	Ga	55
C152788000	C - 60	8
C152881001	H - 27	18
C152883000	H - 29	18
C152884001	H - 30	18
C152936001	J - 6	20
C152937001	J - 7	20
C153049001	H - 7	18
C153050000	F - 26	14
	G - 30	16
C153057101	C - 29	6
	Z - 80	52
C153113001	C - 11	6
C153201001	Ga	55
C153202001	Ga	55
C153203001	Ga	55
C153204001	Ga	55
C153484001	E - 7	12
C153567000	C - 61	8
C153568001	C - 59	8
C153596001	N - 8	30
C153608101	Sp	54
C153827001	E - 2	12
C153830000	E - 1	12
C153838001	D - 47	10
C153843009	Z - 84	52
C153922001	G - 17	16
C154125001	Z - 32	50
C154179001	Z - 99	52
C154339101	Sp	53
C154340101	Sp	53
C154341001	Sp	53
C154467001	Z - 2	50
C154527001	Sp	54
C154596000	K - 23	22
C154599000	K - 12	22
	M - 2	28
C154684009	V1 - 3	46
C154685001	V1 - 9	46
C154686001	V1 - 12	46
C154695001	V1 - 16	46
C154696001	V1 - 17	46
C154697001	V1 - 19	46
C154713001	V1 - 21	46
C154763011	Sp	54
C155559001	N - 3	30
	N - 17	30
	N - 20	30
C156006001	Ga	55
	Ga	56
C156112003	Z - 47	50
C156336101	V1 - 20	46
C159224001	H - 23	18
C159486001	J - 9	20
	J - 24	20
C159610401	Sp	53
C159613051	Sp	53
C159805001	H - 15	18
C159938001	Z - 91	52
C159939001	Z - 88	52
C200190001	Z - 60	50
C231071001	K - 20	22
C554482000	R - 31	38

CODE	REF.NO	Page
C616167001	P2 - 12	34
CJ03955001	T - 2	42
CJ03956001	T - 4	42
CJ03957001	T - 5	42
CJ03958001	T - 7	42
CJ03983001	T - 10	42
CJ03984001	T - 11	42
CJ04115001	Wa	58
CJ04230001	T - 13	42
CJ04303001	T - 17	42
CJ04388001	T - 15	42
CJ04488001	T - 9	42
CJ80991001	T - 1	42
CS00705001	K - 55	24
CS00906001	Ga	55
CS00907001	Ga	55
CS01005000	Z - 43	50
CS01694001	E - 38	12
CS02429201	F - 20	14
CS02652001	K - 13	22
CS02745001	V2 - 6	48
CS02747101	Z - 44	50
CS02763502	Z - 36	50
CS02778002	Z - 52	50
CS02787002	Z - 53	50
CS03468101	E - 30	12
CS03641101	V1 - 29	46
CS03657001	E - 31	12
CS03659001	E - 28	12
CS06706001	Z - 93	52
CS07333001	G - 23	16
CS07783001	Z - 30	50
CS09658001	V2 - 4	48
CS09659001	V2 - 7	48
CS09660001	V2 - 8	48
CS09686001	V2 - 5	48
CS10202201	N - 21	30
CS10268001	J - 26	20
CS10438001	J - 18	20
CS11817000	R - 30	38
CS12441001	H - 13	18
	J - 33	20
CS12699000	H - 10	18
CS13184001	V2 - 11	48
CS15665001	Sp	53
CS15667001	Sp	53
CS16492101	Sp	53
CS18642009	Z - 83	52
CS20356001	D - 10	10
	D - 23	10
	L - 8	26
CS23418002	J - 15	20
CS23651001	B - 9	4
	B - 12	4
	B - 15	4
	B - 19	4
	F - 8	14
	J - 37	20
	K - 2	22
	K - 19	22
CS25235001	B - 16	4
CS25310101	K - 72	24
	V2 - 10	48

CODE	REF.NO	Page
CS25475001	K - 29	22
CS28044001	A - 23	2
CS28415000	G - 15	16
CS31032001	H - 12	18
	J - 32	20
CS32264001	Z - 16	50
CS32462001	K - 27	22
	K - 44	22
CS32465001	K - 25	22
	K - 42	22
CS33006001	Z - 62	52
CS33747001	Ga	55
CS33748001	Ga	55
CS37037001	Z - 58	50
CS37038001	Z - 57	50
CS37059001	Wa	58
CS37060001	A - 22	2
	Wa	58
CS37928012	Sp	54
CS37928019	Sp	54
CS38033002	L - 18	26
CS38648001	Z - 41	50
CS38713100	B - 38	4
CS39690021	K - 9	22
CS42903001	C - 75	8
CS44483001	Z - 67	52
CS44484001	Z - 68	52
CS44485001	Z - 69	52
CS44924001	F - 28	14
CS45849000	G - 16	16
CS46770001	Ga	55
CS46771001	Ga	55
CS46773001	Ga	55
CS46774001	Ga	55
CS46776001	Ga	56
CS46777001	Ga	56
CS46779001	Ga	56
CS46780001	Ga	56
CS47307001	F - 30	14
CS48664001	Sp	53
CS49484000	P1 - 31	32
CS49668101	U - 4	44
CS49694001	Sp	54
CS49695001	Sp	54
CS49955101	C - 76	8
CS49992000	G - 12	16
CS49998001	E - 15	12
CS50529000	G - 14	16
CS51282101	Z - 39	50
CS51283001	Z - 37	50
CS51846101	U - 6	44
CS52071001	E - 39	12
	Ga	57
CS52072001	E - 36	12
	E - 41	12
	Ga	57
CS52073001	E - 43	12
	Ga	57
CS52074001	E - 45	12
	Ga	57
CS52075001	E - 40	12
	Ga	57
CS52076001	E - 37	12

CODE	REF.NO	Page
CS52076001	E - 42	12
	Ga	57
CS52077001	E - 44	12
C	Ga	57
CS52078001	E - 46	12
	Ga	57
CS52093001	E - 18	12
CS55663001	Z - 23	50
CS56877000	G - 19	16
CS59221201	Sp	53
CS59315001	E - 17	12
CS59316001	E - 19	12
CS59317001	E - 20	12
CS59318001	E - 23	12
CS59319001	E - 24	12
CS59320001	E - 27	12
CS59321001	E - 32	12
CS59886001	F - 32	14
	G - 20	16
CS59892001	Ga	55
	Ga	56
CS59909001	Ga	56
	Ga	57
CSA1179002	C - 58	8
CSA1302001	G - 18	16
CSA1579012	Sp	54
CSA1579019	Sp	54
CSA1737011	Sp	54
CSA1752014	Sp	54
CSA1881001	Sp	53
CSA1882001	Sp	53
CSA1890201	Sp	53
CSA1984001	J - 12	20
CSA1988001	J - 25	20
CSA1994101	J - 38	20
CSA2040001	A - 21	2
	Wa	58
CSA2041001	A - 21	2
	Wa	58
CSA2173201	Sp	53
CSA2229001	Ga	56
CSA2230001	Ga	56
CSA2232001	Ga	56
CSA2233001	Ga	56
CSA2235001	Ga	56
CSA2236001	Ga	56
CSA2626001	C - 63	8
CSA2693001	Z - 81	52
CSA2695001	Z - 82	52
CSA2958001	B - 22	4
CSA3025001	B - 36	4
CSA3199001	A - 7	2
CSA3200101	A - 19	2
CSA3201001	B - 1	4
CSA3206001	B - 6	4
	B - 10	4
CSA3208201	C - 54	6
CSA3210001	B - 13	4
CSA3222001	B - 30	4
CSA3223001	B - 32	4
CSA3224001	B - 33	4
CSA3225101	B - 35	4
CSA3226001	F - 1	14

CODE	REF.NO	Page
CSA3227001	F - 2	14
CSA3228101	F - 3	14
CSA3231001	C - 44	6
	D - 31	10
	F - 5	14
CSA3233001	F - 7	14
CSA3234101	F - 10	14
CSA3237001	F - 13	14
CSA3238101	F - 17	14
CSA3239101	F - 19	14
CSA3241001	F - 22	14
CSA3242001	F - 27	14
CSA3244001	G - 1	16
CSA3245001	G - 2	16
CSA3246001	G - 25	16
CSA3249001	G - 10	16
CSA3250001	H - 1	18
CSA3252001	H - 5	18
CSA3254001	H - 8	18
CSA3255001	H - 11	18
CSA3256001	H - 19	18
CSA3257101	H - 25	18
	Sp	54
CSA3258001	H - 26	18
CSA3260001	A - 5	2
CSA3262101	A - 10	2
CSA3263001	A - 11	2
CSA3264001	A - 13	2
CSA3265001	A - 14	2
CSA3266001	A - 16	2
CSA3273001	F - 15	14
CSA3274101	F - 29	14
CSA3275001	F - 31	14
CSA3276001	F - 33	14
CSA3277001	F - 34	14
CSA3278001	F - 36	14
CSA3279001	G - 4	16
CSA3280001	G - 26	16
CSA3282001	G - 8	16
CSA3283101	F - 46	14
CSA3284001	F - 38	14
CSA3287001	G - 22	16
CSA3289001	J - 1	20
CSA3290001	J - 2	20
CSA3291001	J - 4	20
CSA3293001	J - 11	20
CSA3294001	J - 14	20
CSA3295001	J - 16	20
CSA3296001	J - 20	20
CSA3297001	J - 21	20
CSA3298001	J - 27	20
CSA3299001	J - 28	20
CSA3300001	J - 36	20
CSA3301101	K - 1	22
CSA3303001	K - 5	22
CSA3304101	K - 3	22
CSA3305001	K - 7	22
CSA3306001	K - 8	22
	M - 11	28
CSA3307001	K - 10	22
CSA3309001	K - 14	22
CSA3310001	K - 15	22
CSA3311001	K - 16	22

CODE	REF.NO	Page
CSA3312001	K - 21	22
CSA3313101	K - 22	22
CSA3315001	K - 24	22
CSA3317001	K - 32	22
CSA3319101	K - 34	22
CSA3320101	K - 38	22
CSA3321001	K - 39	22
CSA3323001	K - 41	22
CSA3324001	K - 46	22
CSA3325001	K - 47	22
CSA3326001	K - 48	22
CSA3327101	K - 50	22
CSA3333001	K - 77	24
CSA3334001	K - 56	24
	Z - 101	52
CSA3336101	Sp	53
CSA3337001	K - 63	24
CSA3341001	K - 66	24
CSA3342001	K - 67	24
CSA3343001	K - 68	24
CSA3344001	K - 71	24
CSA3345001	M - 1	28
CSA3347001	M - 6	28
CSA3348001	M - 9	28
CSA3349001	M - 10	28
CSA3351001	N - 1	30
CSA3352101	N - 4	30
CSA3353201	N - 6	30
CSA3354001	N - 7	30
CSA3355001	N - 11	30
CSA3357101	N - 14	30
CSA3361001	N - 18	30
CSA3363001	C - 1	6
CSA3364001	C - 2	6
CSA3366001	C - 5	6
CSA3367001	C - 9	6
CSA3368001	C - 10	6
CSA3370001	C - 16	6
CSA3371001	C - 20	6
CSA3372001	C - 22	6
CSA3373001	C - 25	6
CSA3378001	Sp	54
CSA3379001	G - 13	16
CSA3380001	Z - 21	50
CSA3381001	C - 30	6
CSA3382001	C - 35	6
CSA3383001	Z - 1	50
CSA3384001	Z - 7	50
CSA3385001	Z - 9	50
CSA3387001	Z - 12	50
CSA3388001	Z - 77	52
CSA3392001	Z - 11	50
CSA3395001	Z - 10	50
CSA3419001	C - 38	6
CSA3420001	C - 39	6
CSA3421001	C - 40	6
CSA3422001	C - 41	6
CSA3423001	C - 47	6
CSA3424001	C - 51	6
CSA3425001	C - 52	6
CSA3426001	C - 53	6
CSA3427101	C - 57	6
CSA3428001	C - 64	8

CODE	REF.NO	Page
CSA3432001	D - 3	10
CSA3434001	D - 6	10
CSA3435001	D - 9	10
CSA3436001	D - 14	10
CSA3437001	D - 15	10
CSA3438001	D - 16	10
CSA3439001	D - 17	10
CSA3441001	D - 19	10
	L - 5	26
	L - 16	26
CSA3442001	D - 21	10
CSA3443101	D - 26	10
CSA3444001	D - 29	10
CSA3445001	D - 34	10
CSA3446001	D - 36	10
	L - 11	26
CSA3447001	L - 1	26
CSA3448001	L - 3	26
CSA3449001	L - 4	26
CSA3451001	L - 7	26
CSA3452001	L - 12	26
CSA3458001	L - 19	26
CSA3459101	L - 20	26
CSA3464001	L - 24	26
CSA3465101	R - 1	38
CSA3469101	R - 3	38
CSA3472101	R - 5	38
CSA3477001	R - 10	38
CSA3481001	R - 24	38
CSA3486001	R - 28	38
CSA3487001	C - 66	8
CSA3488001	B - 27	4
CSA3489001	Z - 79	52
CSA3497001	B - 17	4
CSA3499001	B - 2	4
CSA3503201	G - 5	16
CSA3504201	G - 6	16
CSA3519101	U - 1	44
CSA3523101	R - 26	38
CSA3528001	B - 28	4
CSA3533001	C - 3	6
CSA3534001	C - 26	6
CSA3538001	C - 23	6
	K - 73	24
CSA3540001	Z - 4	50
CSA3581001	P1 - 46	32
CSA3589001	B - 13	4
CSA3591001	B - 17	4
CSA3604001	C - 24	6
CSA3606001	Sp	54
CSA3607001	Sp	54
CSA3608001	Ga	55
CSA3609001	Sp	54
CSA3610001	Ga	56
CSA3611001	Sp	54
	Ga	55
CSA3612001	Ga	55
CSA3613001	Ga	55
CSA3614001	Ga	55
CSA3615001	Ga	55
CSA3616001	Ga	55
CSA3617001	Ga	55
CSA3618001	Ga	55

CODE	REF.NO	Page
CSA3619001	Ga	55
CSA3620001	Ga	56
CSA3621001	Ga	55
CSA3622001	Ga	56
CSA3623001	Ga	56
CSA3624001	Ga	56
CSA3625001	Ga	56
CSA3626001	Ga	57
CSA3627001	Ga	57
CSA3628001	D - 5	10
CSA3629001	D - 39	10
CSA3630001	D - 43	10
CSA3631001	D - 46	10
CSA3635101	H - 24	18
	Z - 94	52
	Sp	54
CSA3645201	V1 - 30	46
	Ga	57
CSA3646201	Sp	53
	Ga	57
CSA3652201	Sp	53
CSA3653201	Sp	53
CSA3654201	Ga	57
CSA3655001	K - 52	22
CSA3707001	D - 37	10
CSA3708001	C - 33	6
CSA3720001	P1 - 17	32
CSA3722001	P1 - 30	32
CSA3724101	P1 - 24	32
CSA3739301	P1 - 28	32
CSA3744001	P1 - 29	32
CSA3755201	P2 - 1	34
CSA3762001	P2 - 5	34
CSA3765001	P2 - 2	34
CSA3766001	P2 - 3	34
CSA3767001	P2 - 4	34
CSA3768001	P2 - 6	34
CSA3769001	P2 - 7	34
CSA3770001	P2 - 8	34
CSA3771001	P2 - 9	34
CSA3784001	U - 5	44
CSA3789101	Q - 11	36
CSA3794001	P2 - 10	34
CSA3795001	P2 - 11	34
CSA3796001	P1 - 48	32
CSA3797001	P1 - 22	32
CSA3806001	P1 - 37	32
CSA3808001	P1 - 18	32
CSA3809001	Q - 8	36
CSA3812001	Q - 7	36
CSA3813001	Q - 1	36
CSA3816001	Q - 6	36
CSA3817001	Ga	57
CSA3819001	Q - 3	36
CSA3820001	Z - 6	50
CSA3822001	Q - 2	36
CSA3823001	Q - 5	36
CSA3824001	Q - 14	36
CSA3825001	Q - 4	36
CSA3826001	Q - 9	36
CSA3827001	Q - 10	36
CSA3828001	Q - 13	36
CSA3829001	S - 1	40

CODE	REF.NO	Page
CSA3831001	S - 3	40
CSA3833101	S - 7	40
CSA3839001	S - 8	40
CSA4068101	F - 4	14
CSA4072001	D - 49	10
CSA4104001	Z - 73	52
CSA4127001	R - 7	38
CSA4130001	C - 62	8
CSA4143001	H - 18	18
CSA4145001	C - 67	8
CSA4146001	H - 21	18
CSA4171001	J - 5	20
CSA4172001	B - 4	4
CSA4173001	B - 4	4
CSA4174001	B - 4	4
CSA4175001	B - 4	4
CSA4177001	B - 11	4
CSA4178001	B - 14	4
CSA4179001	B - 7	4
CSA4180001	B - 8	4
CSA4187001	F - 14	14
CSA4188001	F - 14	14
CSA4189001	F - 14	14
CSA4190001	F - 14	14
CSA4195001	Ga	57
CSA4196001	Ga	57
CSA4197001	C - 14	6
CSA4198001	C - 74	8
CSA4199001	F - 21	14
CSA4221001	G - 27	16
CSA4222001	G - 29	16
CSA4315001	Sp	53
CSA4327001	B - 18	4
CSA4329001	K - 65	24
CSA4330001	K - 64	24
CSA4333001	H - 3	18
CSA4347001	R - 12	38
CSA4348001	R - 18	38
CSA4354001	K - 51	22
	N - 13	30
CSA4461001	N - 12	30
CSA4510001	Q - 12	36
CSA4518001	K - 54	24
CSA4519001	K - 76	24
CSA4545001	K - 35	22
CSA4546001	K - 31	22
CSA5137001	N - 23	30
CSA5138001	N - 15	30
CSA5221001	Ga	57
CSA6128001	F - 101	14
CSA6129001	F - 102	14
CSA6133001	Sp	53
CSA6156001	V2 - 1	48
CSA6157001	V2 - 2	48
CSA6158001	V2 - 3	48
CSA6346001	Ga	56
CSA6364001	P1 - 13	32
CSA6397001	K - 56	24
	Z - 101	52
CSA6398001	K - 56	24
	Z - 101	52
CSA6429001	K - 53	24
CSA6431001	K - 57	24

CODE	REF.NO	Page
CSA6432001	K - 53	24
CSA6492001	V1 - 1	46
CSA6493001	V1 - 26	46
CSA6504001	V1 - 31	46
CSA6505014	V1 - 27	46
CSA6506014	V1 - 28	46
CSA6509001	Sp	54
CSA6510001	Sp	54
CSA6511001	Sp	54
CSA6563001	B - 18	4
CSA6596001	K - 53	24
CSA6597001	K - 57	24
CXC5780001	C - 7	6