NISEN 尼森

1850D、1860 高速直驱电子套结机

零 件 样 本

1. 外装机壳部件 FRAME & MISCELLANEOUS COVER COMPONENTS

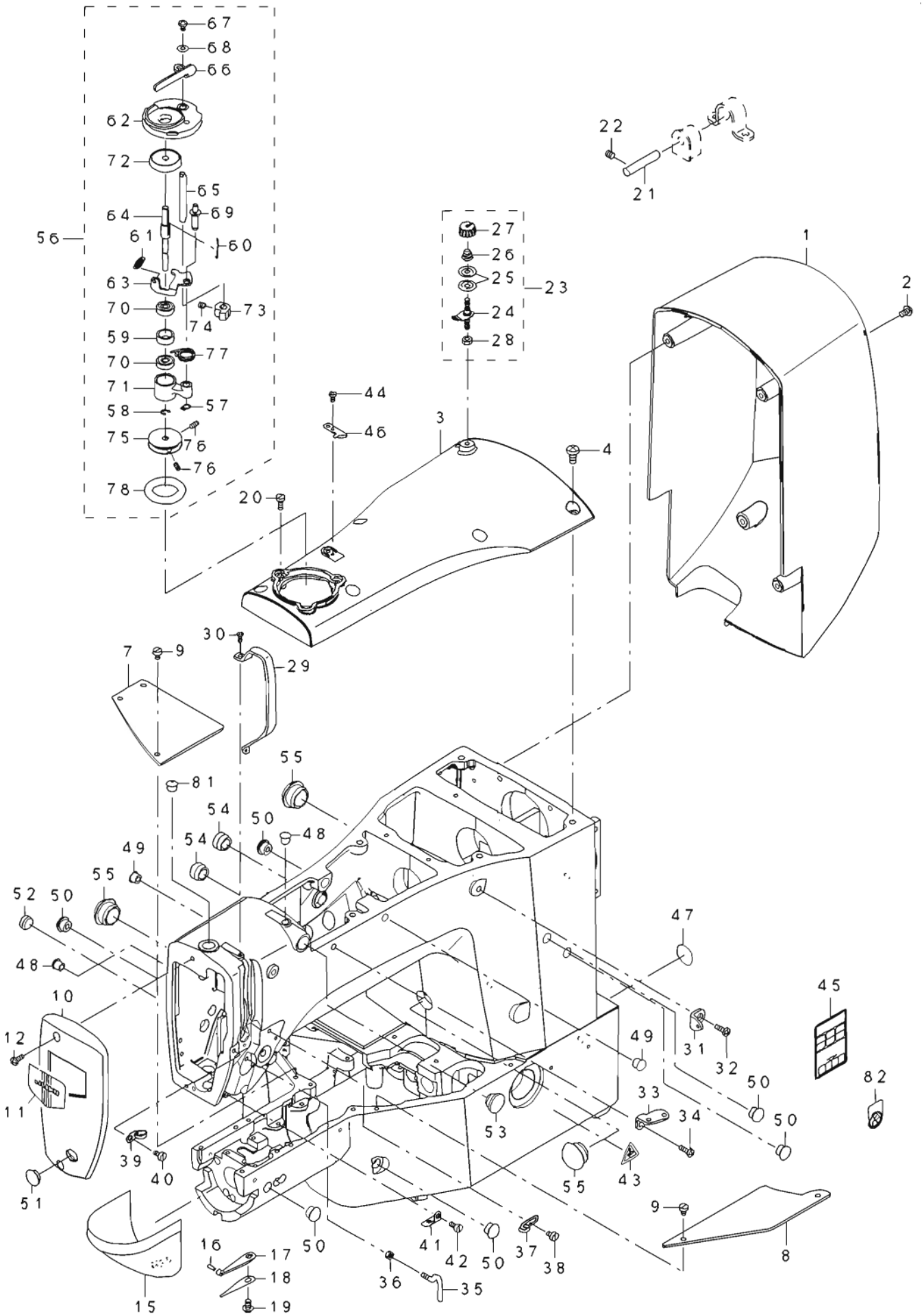

1. 外装机壳部件

NO	件　号	名　称	Number	Description	Qty
1	36-1860A	机头后盖	400-06475	MOTOR COVER	1
2		螺钉M4 L=8	SM-5040855-SN	SCREW	4
3	37-1860A	机头上盖	400-06478	UPSIDE COVER	1
4		螺钉M6 L=12	SM-4061255-SP	SCREW M6 L=12	6
7	01-07-1900ASS	左侧盖	400-06487	BED COVER LEFT	1
8	01-08-1900ASS	右侧盖	400-06488	BED COVER RIGHT	1
9		螺钉M4 L=6	SM-6040650-TP	SCREW M4 L=6	5
10	01-10-1900ASS	面盖	400-06481	FACE COVER	1
11		商标	229-02506	FACE PLATE	1
12		螺钉M4 L=10	SM-4041055-SP	SCREW	2
15	05-020-185	梭床罩	138-16855	CYLINDER ARM CAP	1
16	4-22-1900	圆柱销 B2×10	135-08700	HOOK COVER PRESSER SPRING PIN	1
17	05-021-185	弹簧板A	135-08809	HOOK COVER PRESSER SPRING A	1
18	05-022-185	弹簧板B	135-08908	HOOK COVER PRESSER SPRING B	1
19		螺钉M4 L=8	SM-5040855-SN	SCREW	1
20		螺钉M4 L=11	SM-6041150-TP	SCREW M4 L=11	3
21	1-16-1900	铰链销	B2707-761-000	HINGE STUD	2
22		螺钉M6 L=6	SM-8060612-TP	SCREW M6 L=6	4
23	1-74-1900	夹线控制器1号组件	141-13468	BOBBIN THREAD TENSION ASM.	1
24	11416-780	绕线器过线螺钉	141-13450	BOBBIN THREAD TENSION ROD ASM.	(1)
25	11415-780	夹线盘	B3126-012-000	THREAD TENSION DISK	(2)
26	11414-780	压线弹簧	D7133-555-B00	CONNECTING ROD SPRING	(1)
27	11413-780	夹线螺帽	110-72402	THREAD TENSION NUT	(1)
28	10211-780	螺帽 11/64-40	NS-6110310-SP	NUT 11/64-40	(1)
29	01-012-185	挑线杆护罩	138-16608	BALANCE COVER	1
30	01-009-210	螺钉 M3 L=8	SM-4030855-SN	SCREW M3 L=8.0	2
31	01-014-1900	导线板	400-10414	THREAD_GUIDE_NO.1	1
32	01-011-210	螺钉M6 L=12	SM-4061255-SP	SCREW M6 L=12	1
33	11537-780	过线板	B1111-232-000	THREAD GUIDE PLATE	1
34	01-011-210	螺钉M6 L=12	SM-4061255-SP	SCREW M6 L=12	1
35	780-11544-000	挑线过线钩 A	400-10571	L_SHAPED_THREAD_GUIDE_A	1
36	780-10406-SP	螺帽 M4	NM-6040000-SN	NUTM4	1
37	11542-780	右线钩	229-20508	ARM THREAD GUIDE A	1
38	01-017-210	螺钉M4 L=6	SM-6040650-TP	SCREW M4 L=6	1
39	01-021-210	左线钩	137-05108	TAKE-UP THREAD GUIDE B	1
40	01-017-210	螺钉M4 L=8	SM-6040860-TP	SCREW M4 L=8	1
41	01-019-210	过线板	B1129-210-000	FRAME THREAD GUIDE (B)	1
42	01-017-210	螺钉 M4 L=8	SM-6040860-TP	SCREW M4 L=8	1
43		小心标签	CM-3002000-02	CAUTION LABEL(25)	1
44		螺钉M3 L=6	SM-4030601-SN	SCREW M3 X 6	1
45		安全标签	CM-3012000-01	SAFETY LABEL_S	1
46	01-047-1900	断线刀片	105-02300	THREAD CUTTER	1
47		接地标牌	100-04109	GROUND MARK	1
48		橡胶堵	TA-0750704-R0	RUBBER PLUG	2
49		橡胶堵	TA-0850604-R0	RUBBER PLUG	2
50		橡胶堵	TA-1050504-R0	RUBBER PLUG	6
51		橡胶堵	TA-1250406-R0	RUBBER PLUG D=12.5 L=4	1
52		橡胶堵	TA-1270502-R0	RUBBER PLUG	1
53		橡胶堵	TA-1470704-R0	RUBBER PLUG	1
54		橡胶堵	TA-1550902-R0	PLUG	2
55		橡胶堵	TA-2100904-R0	RUBBER PLUG	3
56		绕线器组件	262-60000	BOBBIN WINDER UNIT	1
57			RC-0560711-KP	RETAINING RING	(1)
58			RE-0400000-K0	E-RING 4	(1)
59			262-60802	BTW BEARING SPACER	(1)
60			262-61602	BOBBIN SPRING	(1)
61			262-61701	BTW SPRING	(1)
62			262-60109	BTW BASE	(1)
63			262-60208	BTW CAM PLATE	(1)
64			262-60901	BTW SHAFT	(1)
65			262-61008	BTW LEVER SHAFT	(1)
66			262-61107	BTW LEVER	(1)
67			SM-5040655-SN	SCREW	(1)
68			WP-0450826-SC	WASHER 4.5X10X0.8	(1)
69			262-60307	BTW BASE SHAFT	(1)
70			262-61305	BTW BEARING	(2)
71			262-60406	BTW SHAFT BASE	(1)
72			262-61206	BTW SPACER	(1)
73			262-60505	BTW CAM LEVER	(1)
74			SM-8050502-TP	SCREW M5 L=5	(1)
75			262-60604	BTW WHEEL	(1)
76			SM-8040802-TP	SCREW M4X8	(2)
77			262-60703	BTW TORSION SPRING	(1)
78			262-61503	BTW WHEEL RUBBER	(1)
81		橡胶堵	229-01409	NEEDLE BAR UPPER BUSH CAP	1
82		禁止注油标签	CM-1001000-01	OIL INJECTION PROHIBITION LABE	1

2. 上轴针杆部件 MAIM SHAFT & NEEDLE BAR COMPONENTS

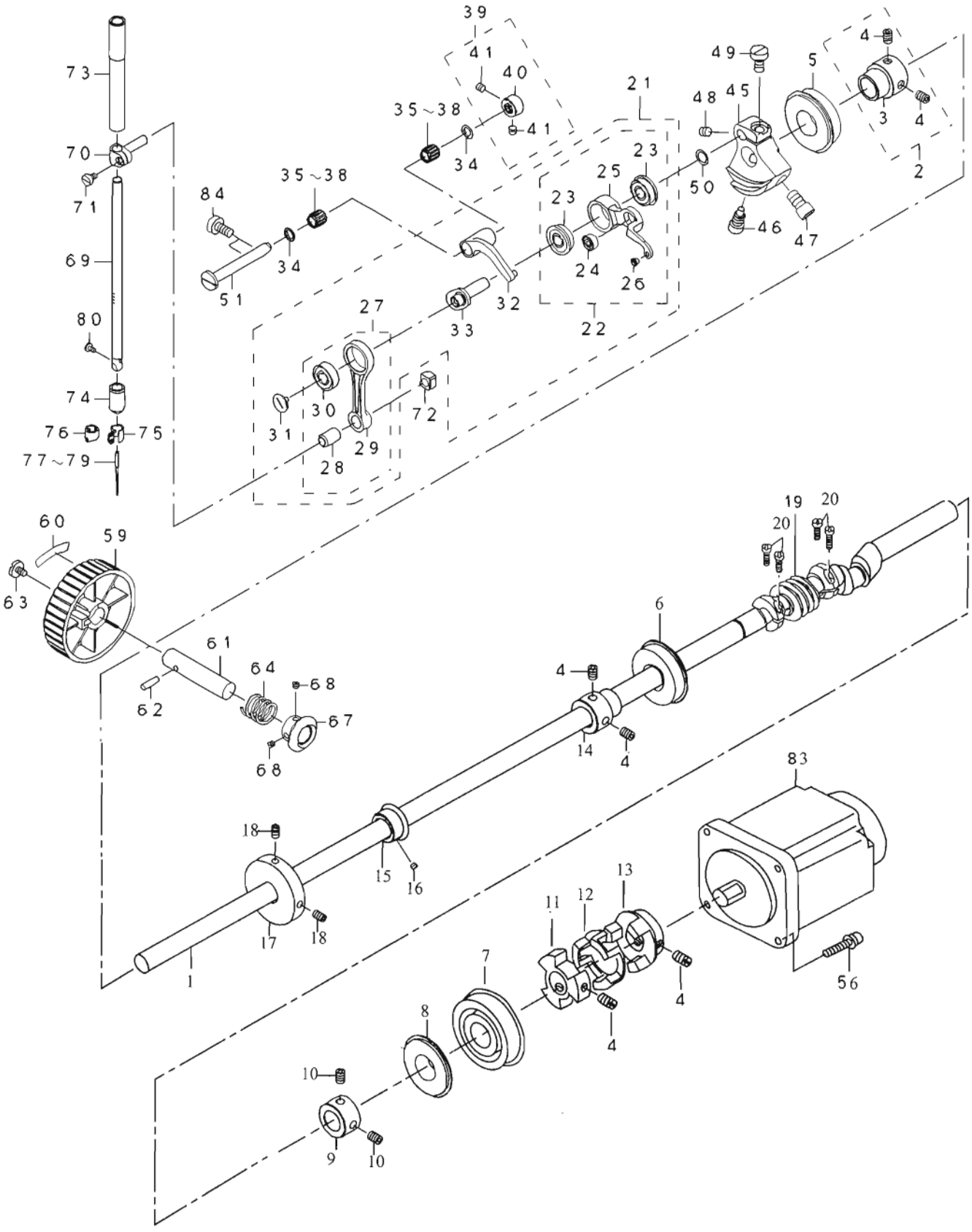

2.上轴针杆部件

NO	件　号	名　　称	Number	Description	Qty
1	29-1860A	上轴	400-10572	MAIN SHAFT	1
2	04-005-210	上轴前（中）轴承定位套组件	400-10415	BEARING_BUSH_A_ASM	1
3	04-005-210	上轴前（中）轴承定位套	400-10416	BEARING_BUSH_A	(1)
4	04-005.1-210	无头内六角螺钉 M6 L=8	SM-8060812-TP	SCREW M6 L=8	(4)
5	04-004-210	带边球轴承 φ20×φ42×12	SB-1200018-00	BEARING	1
6		带边球轴承 6004Z			1
7	2-35-1850				1
8	19-1860A	垫圈			1
9	18-1860A	挡圈			1
10		螺钉SM1/4-40			2
11	24-1860A	联轴器A			1
12		橡胶圈			1
13		联轴器B			1
14	28-1860A	上轴中轴承定位套			1
15	04-050-210	手动伞齿轮(A)	400-06515	GEAR A	1
16	04-051-210	无头内六角螺钉 M4 L=3	SM-8040310-SS	SCREW M4 L=3	2
17	04-054.1-210	摩擦轮	400-10534	BTW_DRIVING_WHEEL	(1)
18	04-054.2-210	无头内六角螺钉 M5 L=8	400-10533	BTW_DRIVING_WHEEL_ASM	(2)
19	02-10-1850	蜗杆			1
20	2-11-1850	螺钉11/64-40			4
21	04-064-210	挑线组件	400-06529	THREAD TAKE UP COMPL.	1
22	04-065-210	挑线杆组件	400-06530	THREAD TAKE UP LEVER ASM	(1)
23	04-068-210	带边球轴承φ8×φ19×6	SB-1080022-00	BEARING	(2)
24	04-069-210	球轴承φ4×φ11×4	SB-1040016-00	BEARING	(1)
25	04-066-210	挑线杆	400-06531	THREAD TAKE UP LEVER	(1)
26	04-067-210	挑线杆孔套	B1908-505-000	THREAD PASS BUSH	(1)
27	04-070-210	针杆曲柄连杆组件	400-06534	NEEDLE BAR CRANK ROD ASM	(1)
28	04-073-210	铜套	228-91006	NEEDLE BAR CRANK ROD METAL	(1)
29	04-071-210	针杆曲柄连杆	400-06535	NEEDLE BAR CRANK ROD	(1)
30	04-072-210	带边球轴承φ8×φ19×6	SB-1080023-00	BEARING	(1)
31	04-076-210	左旋螺钉	B1903-552-000	LEFT SCREW	(1)
32	04-074-210	挑线杆曲柄	400-06532	THREAD TAKE UP CRANK	(1)
33	04-075-210	针杆曲柄	400-06537	NEEDLE ROD CRANK	(1)
34	04-028-210	尼龙垫圈	228-91204	BEARING SUPPORT	2
35	04-029-210	滚针轴承φ7×φ10×9.6	SB-3070002-0A	BEARING	2
36	04-030-210		SB-3070002-0B	BEARING	2
37	04-031-210		SB-3070002-0C	BEARING	2
38	04-032-210		SB-3070002-0D	BEARING	2
39	04-033-210	挡圈组件	400-10434	THRUST_COLLAR_ASM	1
40	04-033.1-210	挡圈	400-10435	THRUST_COLLAR	(1)
41	04-033.2-210	无头内六角螺钉 M5 L=4	400-10436	THRUST_COLLAR_SCREW	(2)
45	30-1860A	针杆曲柄		COUNTER_WEIGHT	1
46	04-011-210	针杆曲柄定位螺钉	400-06517	COUNTER_WEIGHT SCREW A	1
47	04-012-210	螺钉	SM-6081252-TP	BOLT M8 L=12	1
48	04-013-210	无头内六角螺钉M6×0.75 L=6	SM-8480652-TP	SCREW M6X0.75 L=6	1
49	04-014-210	一字平面圆柱头螺钉M6 L=12	SM-6061200-SP	SCREW	1
50	10317-780	止推垫圈	WP-0820516-SP	WASHER 11.6X8.2X0.6	1
51	04-077-210	销轴	400-11902	THREAD_TAKE_UP_CRANK_SHAFT	1
56	04-041-210	内六角组合螺钉M5 L=25	SL-6052592-TN	BOLT	4
59	02-049-1900	手轮	B1212-210-D00	PULLEY	1
60	02-045-210	旋向标签	B1144-210-000	REVOLVING DIRECTION LABEL	1
61	02-006-1900	手轮轴	265-00306	HAND PULLEY SHAFT	1
62	GB/T879	弹性圆柱销 4×14	PS-0400142-KH	SPRING PIN 4X14	1
63	02-047-1900	手轮固定螺钉	A1230-500-00A	SET-SCREW	1
64	02-050-1900	弹簧	GAF-01007000	SPRING	1
67	02-008-1900	手动伞齿轮(B)	400-06516	GEAR B	1
68	02-053-1900	螺钉 11/64”-40 L=28	SM-8040310-SS	SCREW M4 L=3	2
69	2-13-1850	针杆		NEEDLE BAR	1
70	03-007-185	针杆连接轴	B1411-552-000	NEEDLE BAR CLAMP	1
71	11424-780	螺钉 9/64-40 L=6	SS-6090670-TP	SCREW 9/64-40 L=6	1
72	10601-780	针杆架传动滑块	B1414-555-000	SLIDE BLOCK	1
73	3-10-1850	针杆上套	400-10441	NEEDLE ROD METAL	1
74	04-056-210	针杆下套	400-10442	NEEDLE ROD LOWER METAL	1
75	3-16-1850	针杆导线架	400-10574	THREAD_GUIDE	1
76			DI405-L7A-M00	NEEDLE BAR THREAD GUIDE	1
77		机针	MDP-500B1100	NEEDLE DPX5 #11	1
78			MDP-500B1400	NEEDLE DPX5 #14	1
79			MDP-170B2100	NEEDLE DPX17 #21	1
80	04-063-210	螺钉 M3 L=4.5	SM-7030550-TP	SCREW M3 L=4.5	1
83		伺服电机		AC SERVO MOTOR	1
84	04-078-210	无头内六角螺钉 M6 L=12	SM-6061250-TF	SCREW M6 L=12	2

3. 拨线控制部件 PRESSER LIFTER & WIPER COMPONENTS

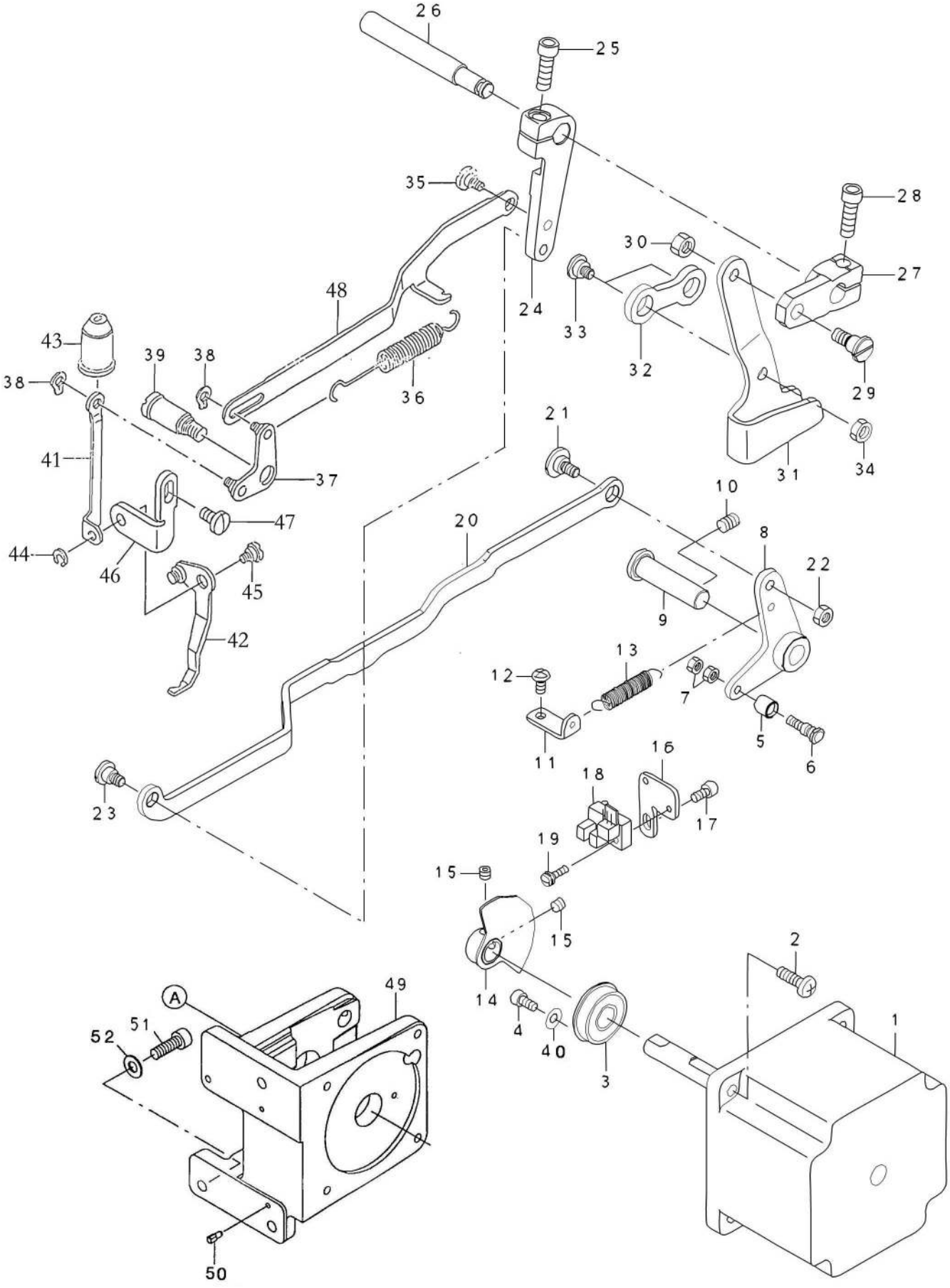

3.拨线控制部件

NO	件　号	名　称	Number	Description	Qty
1		抬压脚控制马达	400-29903	PRESSER LIFTING MOTOR	1
2		螺钉 M5 L=16	SM-4051655-SP	SCREW M5 L=16	4
3	07-047-210	带边球轴承φ10×φ26×8	SB-1100024-00	BEARING	1
4		螺钉M4 L=8	SM-6040802-TP	SCREW M4X0.7 L=8	1
5	11-004-210	凸轮滚子	235-17501	NEEDLE CAM ROLLER A	1
6	11-008-210	滚轮轴	400-40256	CAM ROLLER SHAFT	1
7	GB	螺帽M4	NM-6040001-SP	NUT M4X0.7	2
8	03-08-1900ASS	压脚控制连杆A组件	400-06661	LIFTER LINK A ASM.	1
9	03-09-1900ASS	销轴	400-06716	THREAD TRIMMER SHAFT	1
10	GB/T77	无头内六角螺钉M6 L=8	SM-8060812-TP	SCREW M6 L=8	1
11	03-11-1900ASS	挂弹簧架	400-23831	SPRING_RACK	1
12		螺钉M4 L=8	SM-4040855-SP	SCREW	1
13	07-035-210	拉簧	135-15606	SPRING	1
14	07-045-210	感应器组件	400-06666	SENSOR SLIT ASM.	1
15	07-046-210	无头内六角螺钉M5 L=4	SM-8050402-TP	SCREW	2
16	03-16-1900ASS	感应器安装板	400-10443	SENSOR_INSTALLING_BASE	1
17	GB/T70	内六角圆柱头螺钉M4 L=8	SM-6040802-TP	SCREW M4X0.7 L=8	1
18		感应器	HD-0005700-0A	PHOTO SENSOR	1
19		螺钉M3 L=12	SL-4031291-SC	SCREW M3X12	1
20	40-1860B	压脚控制连杆B	400-06665	LIFTER LINK B	1
21	11-011-210	轴位螺钉 D=8 H=3.3	SD-0800327-TP	HINGE SCREW D=8 H=3.2	1
22	GB	螺母M5	NM-6050001-SP	NUT M5	1
23	03-23-1900ASS	轴位螺钉	SD-0700406-TP	HINGE SCREW D=7 H=4	1
24	03-020-1900	连接臂	400-06671	CONNECTING ARM	1
25	GB/T70	内六角圆柱头螺钉 M6 L=18	SM-6061802-TP	SCREW M6 L=18	1
26	03-005-1900	连接臂轴	265-00405	CONNECTING SHAFT	1
27	03-27-1900ASS	压脚连接臂	400-08693	LOWERING ARM	1
28	GB/T70	内六角圆柱头螺钉 M6 L=18	SM-6061802-TP	SCREW M6 L=18	1
29	03-29-1900ASS	轴位螺钉	SD-0790606-TP	HINGE SCREW D=7.94 H=6	1
30	GB	螺帽M6	NM-6060001-CP	NUT M6	1
31	03-31-1900ASS	抬压脚压杆	400-06672	LOWERING FOOT	1
32	03-004-1900	抬压脚连杆	141-04400	CONNECTING LINK	1
33	03-33-1900ASS	轴位螺钉	SD-1000406-TP	HINGE SCREW D=10 H=4	2
34	GB	螺母M6	NM-6060003-SC	NUT M6	1
35	4-30-185	轴位螺钉	SD-0530221-SP	HINGE SCREW D=5.3 H=2.2	1
36	04-025-185	拨线拉杆拉簧	135-09708	SPRING	1
37	04-026-185	拨线杠杆组件	135-099555	WIPER CONNECTING ARM ASM.	1
38	GB/T894.1-1985	轴用弹性挡圈5	RC-0470611-KP	RETAINING RING 5	2
39	04-027-185	拨线拉杆定位螺钉	B2109-280-000	WIPER CONNECTING SCREW	1
40	GB/T97.1	垫圈 4	WP-0450801-SP	WASHER	1
41	04-029-185	拨线拉杆	135-09609	WIPER CONNECTING PLATE	1
42	04-031-185	拨线杆	B2101-280-0A0	WIPER ASM.	1
43	04-028-185	挡油罩	135-09807	OIL SHIELD CAP	1
44	GB/T894.1-1985	轴用弹性挡圈5	B1229-232-000	RETAINING RING 5	1
45	4-56-185	轴位螺钉	SD-0640211-SP	HINGE SCREW D=6.35 H=2.1	1
46	04-030-185	拨线拉杆定位架	135-74009	WIPER BASE PLATE	1
47	04-055-185	螺钉	SS-7110840-SP	SCREW 11/64-40 L=7.8	1
48	04-024-185	拨线调节杆	135-09500	WIPER CONNECTING LINK	1
49	07-23-210	剪线电机座	400-28337		1
50	GB/T119	定位销 3×10	B1816-215-P00		2
51	GB/T70	内六角螺钉M6*18	SM-6061802-TP		3
52	GB/T97.1	垫圈6.4×12×1.6	WP-0651001-SC		3

4. 摆梭、传动部件 SHUTTLE DRIVER SHAFT COMPONENTS

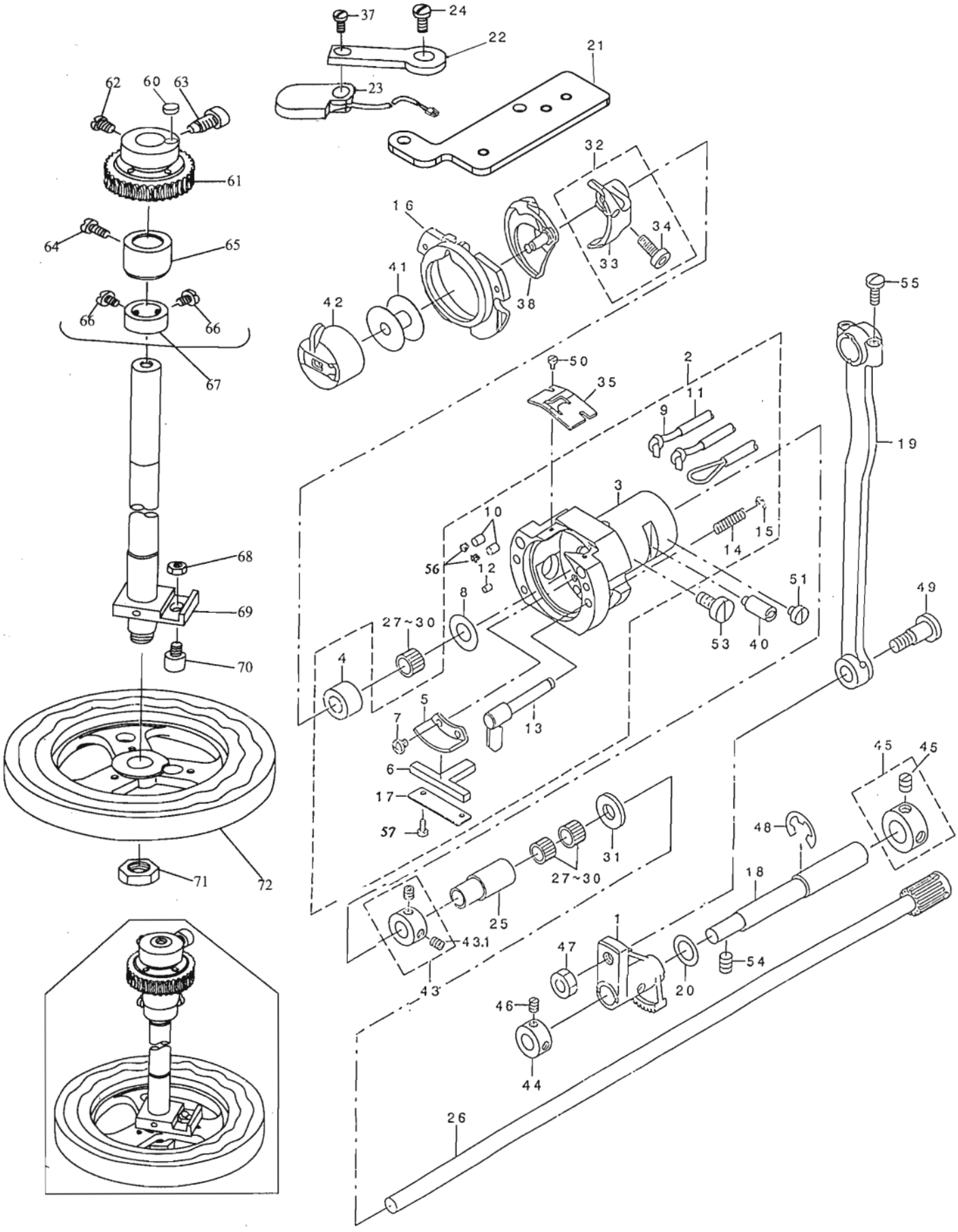

4.摆梭、传动部件

NO	件　号	名　称	Number	Description	Qty
1	04-001-1900	扇形摆动齿轮	141-03402	OSCILLATOR	1
2		梭床体组件	141-03154	SHUTTLE ASM	1
3	05-005-185	梭床体	141-03105	SHUTTLE	(1)
4	05-004-185	梭床轴套	B1813-980-000	SHUTTLE NEEDLE OUTER RING	(1)
5	10-034-185	梭床加油板	B3505-280-000	SHUTTLE LUBRICATING PLATE	(1)
6	05-005.6-185	毛毡	B3504-280-000	SHUTTLE ONCE THROUGH OIL FELT	(1)
7	10-45-185	螺钉 9/64-40 L=4	SS-6090440- SP	SCREW9/64-40 L=4	(2)
8	5-9-185	垫圈 9.5×14.8×2.6	WP-0952616- SD	WASHER 9.5×14.8×2.6	(1)
9		油毛毡绳（φ2）	CQ-2522000-00	OIL WICK	1.59)
11		乙烯基管（φ4.5×0.8）	BP-3000000-00	VINYL PIPE	0.99)
13	05-005.1-185	梭床压板组件	B1820-215-PA0-A	INNER HOOK PRESSER ASM	(2)
14	05-005.4-185	弹簧	B1822-215- P00	INNER HOOK PRESSER SPRING	(2)
15	GB/T896-1986	开口挡圈 3	RE-0300000 K0	E-RING 3	(2)
16	05-001.1-185	梭床盖组件	141-03253	INNER HOOK PRESSER ASM,A	1
17	05-005.5-185	油毡压板	141-04004	ONCE THROUGH OIL FELT PRESSER	1
18	04-018-1900	摆动齿轮偏心轴	B1836-210- D00	OSCILLATING ECCENTRIC SHAFT	1
19	04-019-1900	摆梭连杆	B1802-210- D00	CRANK ROD	1
20	04-020-1900	垫圈	105-23504	WASHER	1
21	15-1860A	松线座板			1
22	16-1860A	停车感应器板		SENSOR INSTALLING BASE	1
23		停车感应器		SENSOR INSTALLING	1
24		螺钉		SCREW	1
25	05-009-185	下轴后套	135-08403	LOWER SHAFT REAR METAL	1
26	05-011-185	下轴组件	135-09153	LOWER SHAFT GEAR A ASM	1
27	5846-081110	滚针轴承	B1411-804-A00	BEARING(A)	3
31	05-010-185	垫圈	B1808-980-000	LOWER SHAFT THRUST WASHER	1
32		摆梭托组件	B1812-980-0A0	DRIVER ASM	1
33	05-003-185	摆梭托	B1812-980-000	SHUTTLE DRIVER	(1)
34	5-6-185	螺钉 3/16-28 L=12	SS-6121212-TP	SCREW3/16-28 L=12	(1)
35	05-006-185		B1815-980-000	SHUTTLE UPPER SPRING	1
37		螺钉 M3		SCREWM3	1
38	5-4 SH280	摆梭	B1818-280-000	INNER HOOK	1
40	05-007-185	梭床调节轴	B1819-280-000	SHUTTLE RACE ADJUSTING SHAFT	1
41	05-002-185	梭芯	138-12102	BOBBIN	1
42	B1828-185	梭壳组件	B1828-980-0BB	BOBBIN CASE ASM(RACING PREVE)	1
43	05-008-185	下轴挡圈组件 D=8 W=8	CS-080081G-SH	THRUST COLLAR ASM D=8 W=8	1
44	04-044-1900	摆动齿轮挡圈	CS-1000811-SP	THRUST COLLAR	1
45	04-045-1900	摆动齿轮挡圈组件	CS-1201010-SH	THRUST COLLAR ASM D=12 W=10	1
46	5-27-185	螺钉 11/64-40 L=4.5	SS-8110520-TP	SCREW11/64-40 L=4.5	2
47	5-25-185	螺母 1/4-40	NS-6660430-SP	NUT 1/4-40	1
48	GB/T896-1986	开口挡圈 9	RE-0900000-K0	E-RING 9	1
49	5-23-185	轴位螺钉 D=8 H=10.2	SD-0801021-TP	HINGE SCREW D=8 H=10.2	1
50	5-12-185	螺钉 3/32-56 L=3.5	SS-6060410-TP	SCREW3/32-56 L=3.5	2
51	1-8-185	螺钉 11/64-40 L=4.3	SS-6110480-SP	SCREW11/64-40 L=4.3	1
53	6-31-185	螺钉 15/64-28 L=11.5	SS-6151220-SP	SCREW15/64-28 L=11.5	1
54	5-31-185	螺钉 15/64-28 L=8	SS-8150822-TP	SCREW15/64-28 L=8	2
55	5-3-1190	螺钉 11/64-40 L=10.5	SS-7111110-TP	SCREW11/64-40 L=10.5	2
56	10-035-185	橡胶塞		RUBBER PLUG	(2)
57	5-12-185	螺钉 3/32-56 L=3.5	SS-6060410-TP	SCREW3/32-56 L=3.5	2
61	05-024-185	蜗轮组件	135-10458	WORM WHEEL ASM	1
62	5-41-185	螺钉1/4-40 L=11	SS-6661110-SP	SCREW1/4-40 L=7	1
63	05-023-185	蜗轮座定位螺钉	SS-6742012-TP	SCREW3/8-28 L=19.5	1
65	05-025-185	送布凸轮轴轴套	135-10201	WORM WHEEL SHAFT BUSHING	1
66	5-47-1850	螺钉1/4-40 L=7	SS-6660710-TP	SCREW1/4-40 L=7	2
67	05-026-185	立轴挡圈	CS-180121A-SH	THRUST COLLAR ASM D=18 W=12	1
68	5-48-1850	螺母1/4-40	NS-6660511-SP	NUT 1/4-40	1
69	05-027-185	送布凸轮轴组件	135-10151	WORM WHEEL SHAFT ASM	1
70	5-50-1850	轴位螺钉 D=12 H=12	135-10706	CAM GUIDE PIN	1
71	5-51-1850	螺母9/16-20	NS-6360810-SP	NUT9/16-20	1
72	05-028-185	送布凸轮	135-10607	FEED CAM	1

7. 剪线部件 CUT LINE COMPONENTS

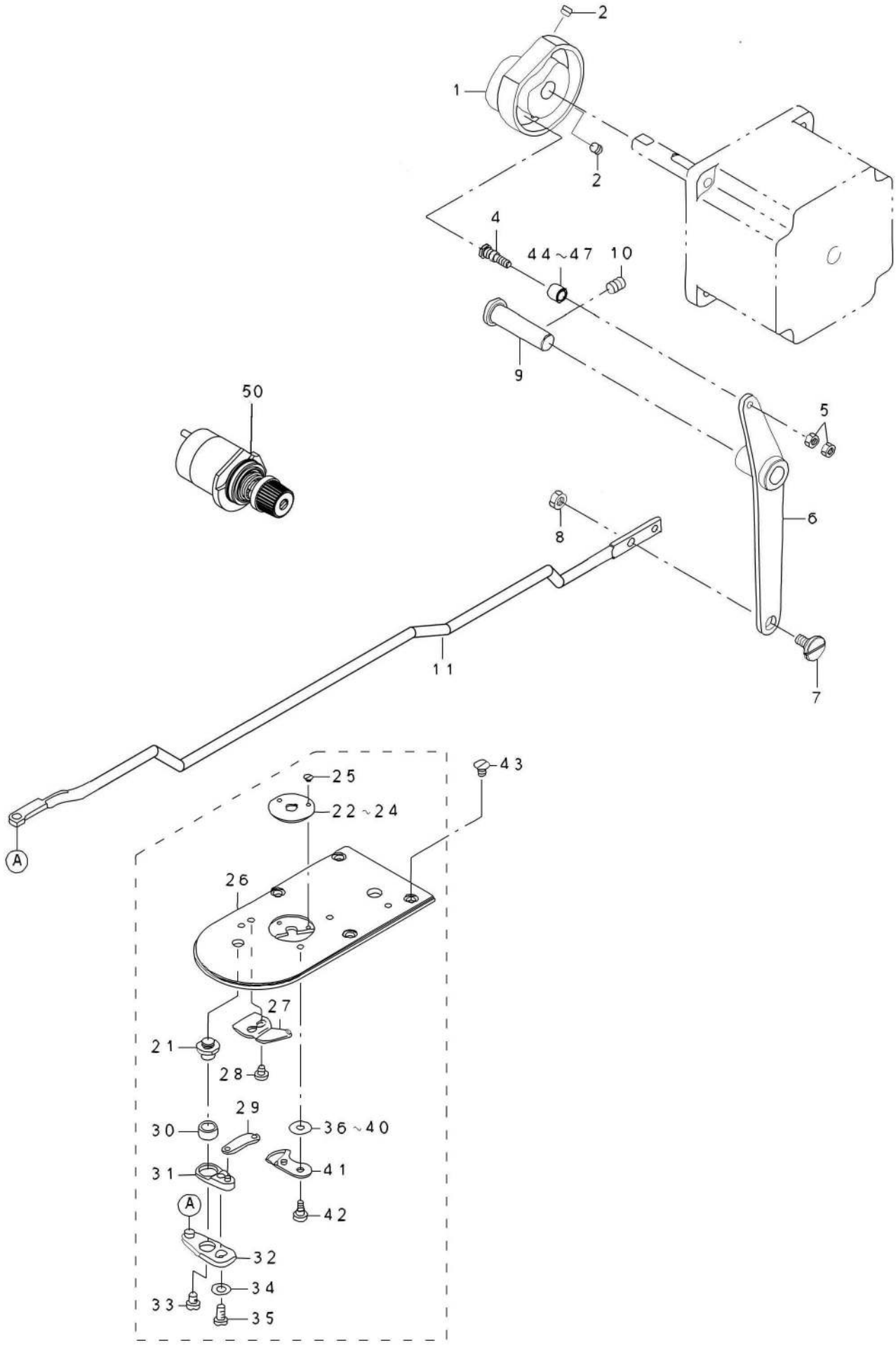

7.剪线部件

NO	件　号	名　称	Number	Description	Qty
1	06-01-1900ASS	剪线凸轮	400-06711	THREAD TRIMMER CAM	1
2	11-002-210	无头内六角螺钉 M5 L=5	SM-8050592-TP	SCREW	2
3	11-018-210	垫圈　4.3×　9×0.8	WP-0450801-SP	WASHER	1
4	11-008-210	滚轮轴	400-40256	CAM ROLLER SHAFT	1
5	11-009-210	螺母 M4	NM-6040001-SP	NUT M4X0.7	2
6	11-010-210	剪线杠杆	400-06712	THREAD TRIMMER LINK ASM.	1
7	11-011-210	轴位螺钉D=8 H=3.3	SD-0800327-TP	HINGE SCREW D=8 H=3.2	1
8	11-012-210	螺母 M5	NM-6050001-SP	NUT M5	1
9	03-09-1900ASS	杠杆轴	400-06716	THREAD TRIMMER SHAFT	1
10	11-014-210	无头内六角螺钉 M6 L=8	SM-8060812-TP	SCREW M6 L=8	1
11	32-1860B	剪线拉杆	400-06717	CONNECTING BAR	1
21	03-026.2-185	动刀曲柄轴	B2417-280-000	THREAD CUTTER LEVER SHAFT	1
22	03-025-185	针板(　1.6　　2.2　　1.6)	B2426-280-000	NEEDLE HOLE GUIDE	1
25	11-035-210	平机螺钉 3/32-56 L=2.2	SS-1060210-TP	SCREW3/32-56 L=2.2	2
26	03-026-185	大针板	400-06721	NEEDLE PLATE	1
27	03-027-185	定刀	B2424-280-000	FIXING KNIFE	1
28	11-033-210	圆柱头螺钉 9/64-40 L=3.5	SS-7090410-SP	SCREW 9/64-40 L= 3.5	2
29	11-030-210	动刀连杆	B2418-280-000	MOVING KNIFE LINK	1
30	11-031-210	动刀曲柄衬套	B2416-280-000	THREAD CUTTING LEVER RING	1
31	11-032-210	动刀曲柄组件	B2415-280-0A0	THREAD CUTTER LEVER ASM..SMALL	1
32	11-034-210	动刀驱动连杆组件	B2414-280-0A0	THREAD CUTTER LEVER ASM..LARGE	1
33	11-040-210	圆柱头螺钉 11/64-40 L=4.	SS-6110430-TP	SCREW 11/64-40 L= 4.0	1
34	11-037-210	垫圈　4.8×　7.8×0.8	WP-0450846-SP	WASHER	1
35	11-039-210	圆柱头螺钉11/64-40 L=7	SS-7110740-TP	SCREW11/64-40 L=7	1
36	03-032-185	调整垫片3.8×11×(0.4 0.5 0.6)	B2423-280-00C	MOVING KNIFE WASHER C	1
41	03-033-185	动刀	B2421-280-0A0	MOVING KNIFE ASM.	1
42	3-54-185	轴位螺钉 D= 5.0H= 0.9	SD-0500091-TP	HINGE SCREW D= 5.0H= 0.9	1
43	11-003-210	沉头螺钉M4 L=8	SM-1040650-TP	SCREW M4 L=6	4
44	11-004-210	滚柱	263-15606	NEEDLE CAM ROLLER A	1
50	07-50-1860	电子夹线器			1

8. 送料部件 / FEED MECHANISM COMPONENTS

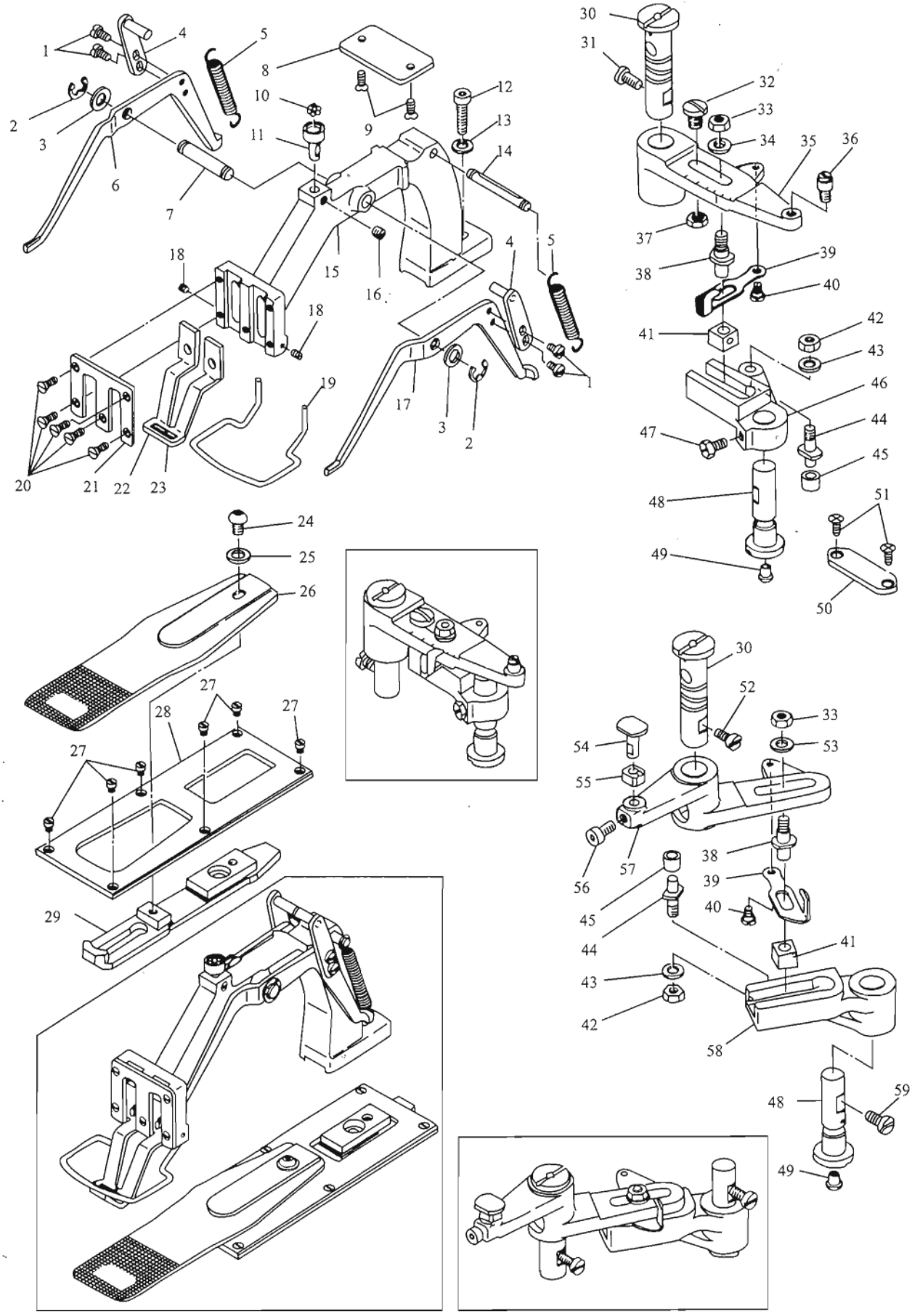

8.送料部件

NO	件　号	名　称	Number	Description	Qty
1	6-1-1850	螺钉 11/64-40 L=7		SCREW11/64-40 L=7	4
2	896-0700000	开口挡圈 7		E-RING 7	2
3	6-3-1850	垫圈8.5*14*1		WASHER 8.5*14*1	2
4	06-001-185	压脚提升导板组件		LEVER DRIVING PLATE ASM	2
5	06-002-185	拉簧		TENSION SPRING	2
6	06-003-185	左压脚提升架		OFTOMG EVER EFT	1
7	06-004-185	提升架轴		LIFTING LEVER SHAFT	1
8	07-39-1900ASS	送料架支承板		SUPPORT PLATE	1
9	6-9-1850	螺钉 11/64-40 L=8.5		SCREW11/64-40 L=8.5	2
10	308-31750	钢球（1/8）		WORK CLAMP FOOT MOUNTING BASE	9
11	06-006-185	钢球座		BALL RETAINER	1
12	6-12-1850	螺钉M6 L=20		SCREWM6 L=20	1
13	6-13-1850	垫圈6.2*13*1		WASHER 6.2*13*1	1
14	06-007-185	拉簧挂销		SPRING SUSPENSION	1
15	06-008-185	送料架		FEED BRACKET	1
16	6-16-1850	螺钉 15/64-28 L=4.7		SCREW15/64-28 L=4.7	1
17	06-009-185	右压脚提升架		LIFTING LEVER RIGHT	1
18	6-18-1850	螺钉 1/8-44 L=2.8		SCREW1/8-44 L=2.8	2
19	06-010-185	护手圈		FINGER GUARDE	1
20	6-20-1850	螺钉 11/64-40 L=8.7		SCREW11/64-40 L=8.7	2
21	06-011-185	压脚面板		WORK CLAMP FOOT FACE PLATE	1
22	06-012-185	左压脚		WORK CLAMP FOOT RIGHT	1
23	06-013-185	右压脚		WORK CLAMP FOOT LEFT	1
24	8-64-1900	螺钉 M6 L=10		SCREWM6 L=10	1
25	6-13-185	垫圈 6.2*13*1		WASHER 6.2*13*1	1
26	8-14-1900	送料板		FEED PLATE	1
27	6-27-1850	螺钉 11/64-40 L=4.8		SCREW11/64-40 L=4.8	6
28	06-015-185	盖板		FEED PLATE PRESSER PLATE	1
29	07-24-1900ASS	送料托架		FEED PLATE CARRIER BAR	1
30	06-017-185	针距调节器销		FEED DRIVING ARMSHAFT	2
31	6-31-1850	螺钉 15/64-28 L=11.5		SCREW15/64-28 L=11.5	1
32	6-32-1850	螺钉 5/16-24 L=10		SCREW5/16-24 L=10	1
33	6-33-1850	螺母 15/64-28		NUT 15/64-28	2
34	6-34-1850	垫圈 7*15*2		WASHER 7*15*2	1
35	06-018-185	横向针距调节杆		FEED REGULATOR	1
36	06-019-185	横向针距连动销		HINGE STUD	1
37	6-37-1850	螺母 5/16-24		NUT 5/16-24	1
38	06-020-185	针距滑块轴		FEED REGULATOR STUD	2
39	06-021-185	针距指示杆		INDICATOR LEVER	2
40	6-40-1850	轴位螺钉D=5.3 H=2.2		HINGE SCREWD=5.3 H=2.2	2
41	06-022-185	针距滑块		SLIDE BLOCK B	2
42	6-42-1850	螺母 1/4-40		NUT 1/4-40	2
43	6-43-1850	垫圈6.5*13*0.8		WASHER 6.5*13*0.8	2
44	06-023-185	送料滚柱轴		FEED CAM ROLLER SHAFT	2
45	06-024-185	送料滚柱		FEED CAM ROLLER SHAFT	2
46	06-025-185	横向针距传动杆		FEED DRIVING ARM	1
47	6-47-1850	螺钉15/64-28 L=14		SCREW15/64-28 L=14	1
48	06-026-185	针距座销		FEED REGULATOR SHAFT	2
49	06-027-185	油塞		RUBBER PLUG	2
50	06-028-185	托板		PLATE	1
51	6-51-1850	螺钉 11/64-40 L=8.5		SCREW11/64-40 L=8.5	2
52	6-52-1850	螺钉15/64-28 L=11.5		SCREW15/64-28 L=11.5	1
53	6-53-1850	垫圈7*15*2		WASHER 7*15*2	1
54	06-029-185	送料滑块轴		SLIDE BLOCK STUD	1
55	06-030-185	送料滑块		SQUARE BLOCK	1
56	6-56-1850	螺钉15/64-28 L=10.5		SCREW15/64-28 L=10.5	1
57	06-031-185	纵向针距调节杆		FEED ACROSS DRIVING ARM	1
58	06-032-185	纵向针距传动杆		FEED ACROSS REGULATOR 1	1
59	6-59-1850	螺钉15/64-28 L=11.5		SCREW15/64-28 L=11.5	1

9. 润滑、安全部件 LUBRICATION & SAFETY PLATE COMPONENTS

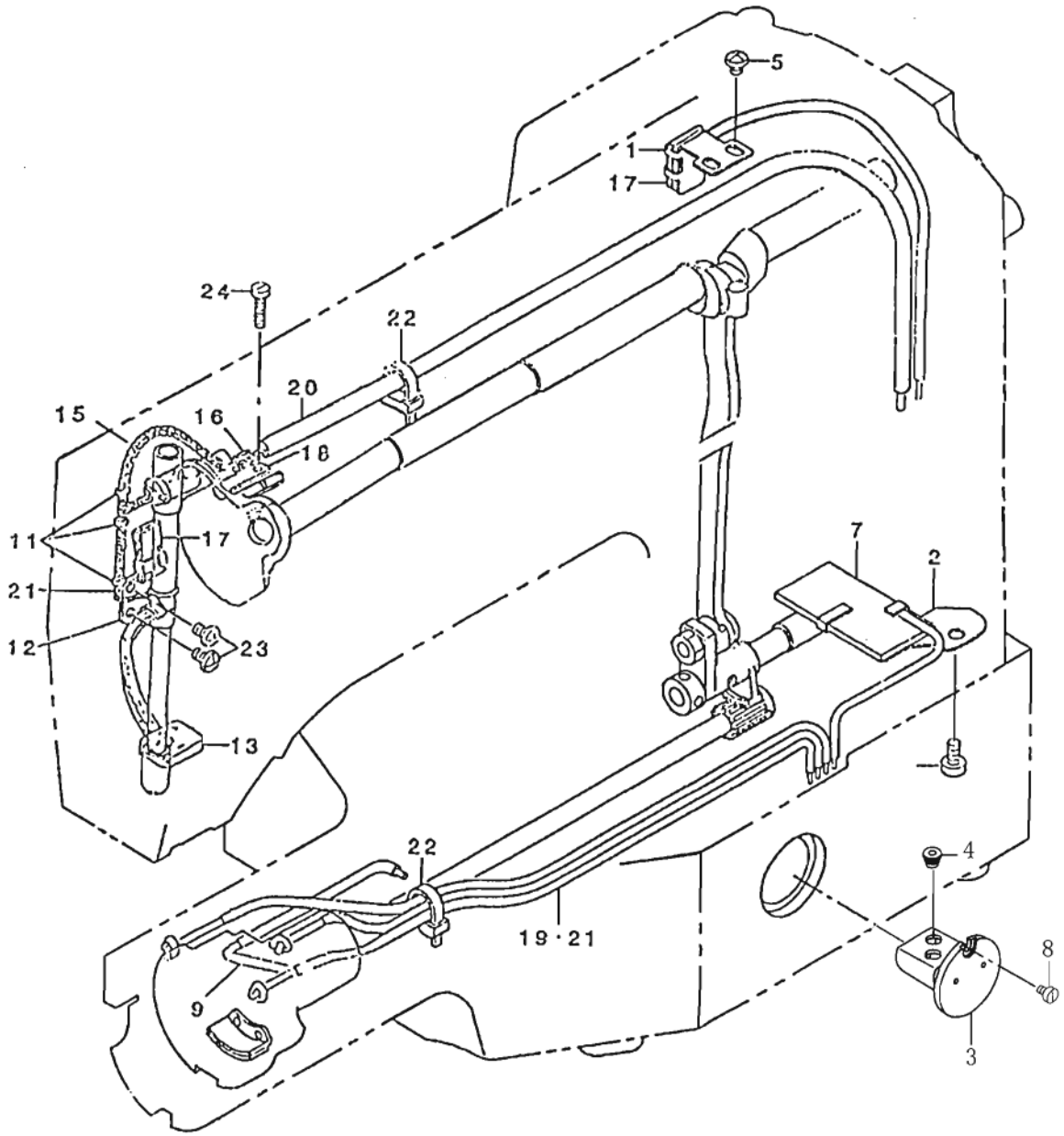

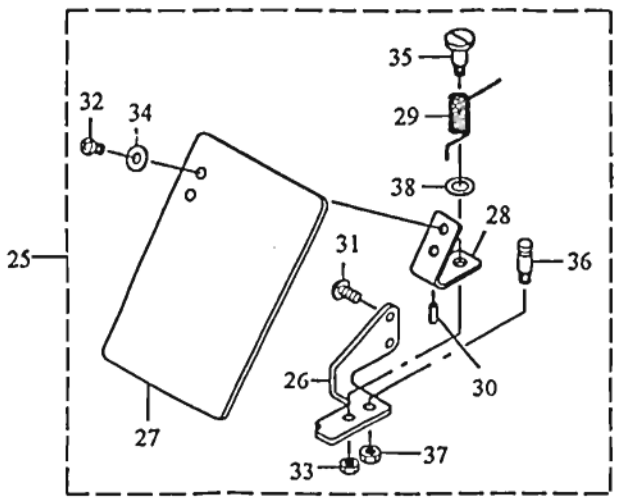

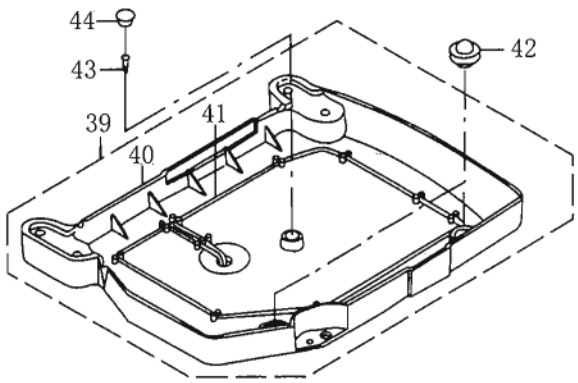

9.润滑、安全部件

NO	件　号	名　称	Number	Description	Qty
1	09-001-1900	油毡夹	141-14102	OIL SHIELD	1
2	09-002-1900	油毡夹	141-14201	OIL SHIELD	1
3	03-060-210	油窗	400-06836	OIL TANK ASM	1
4	03-062-210	橡胶塞	400-06840	RUBBER BUSH	2
5	10158-780	螺钉 11/64-40 L=5	SS-4110515- SP	SCREW11/64-40 L=5	2
6	11131-780	螺钉 3/16-28 L=9	SS-6120930- SP	SCREW3/16-28 L=9	1
7	09-007-1900	油毛毡	B3509-210- D00	OIL FELT	1
8	GB/T65	螺钉	SM6040650-TP	SCREW	
9		套管、油绳	135-30357	VINYL PIPE,OIL ROPE	1
11	10-004-185	油线夹	B1419-026-000	OIL WICK PRESSER	3
12	09-012-1900	油线夹	B3506-280-000	OIL WICK PRESSER	1
13	20-1860A	油毛毡	B3507-280-000	FACE FELT	1
15		油线 φ2	CQ-2000000-00	OIL WICK	2.3M
16	10-010-185	油毡	B3508-280-000	BALANCE LUBRICATING PLATE	2
17	10-009-185	润滑毛毡	10-011-185	NEEDLE ROD CRANK LUBRICATING	2
18	10-011-185	托板	B3518-280-000	BALANCE LUBRICATING	1
19		套管 φ3*0.75	BP-3000001-00	VINYL TUBE	0.7M
20		套管 φ6*1	BP-6000000-00	VINYL PIPE	0.72M
21		套管 φ3*1	CQ-2522000-00	OIL WICK	1.6M
22		油管夹（扎带3*80）	EA-9500 B01-00	CABLE BAND	2
23	10140-780	螺钉 11/64-40 L=7	SS-4110715- SP	SCREW11/64-40 L=7	2
24	10-13-185	螺钉 9/64-40 L=21.2	SS-6092120- SP	SCREW9/64-40 L=21.2	1
25	01-029-185	安全板组件	135-51254	SAFETY PLATE ASM	1
26	01-037-185	安全板连接架座	135-51205	SAFETY PLATE INSTALLING BASE	1
27	02-002-780	安全板	B3120-372-000	SAFETY PLATE	1
28	02-010-185	安全板连接架	B3121-372-000	SAFETY PLATE INSTALLING PLATE	1
29	02-006-780	扭转弹簧	139-43204	SAFETY PLATE RETURN SPRING	1
30	GB879-76	弹性圆柱销 2*6	PS-0200062-KH	SPRING PIN 2×6	1
31	10203-780	螺钉 11/64-40 L=7	SS-4110715- SP	SCREW11/64-40 L=7	2
32	10203-780	螺钉 11/64-40 L=7	SS-4110715- SP	SCREW11/64-40 L=7	2
33	10211-780	螺母 11/64-40	NS-6110310-SP	NUT 11/64-40	1
34	10204-780	垫圈 4.5*10*0.8	WP-0450801-SD	WASHER 4.5×10×0.8	2
35	10205-780	轴位螺钉 D=6 H=10.2	SD-0601021-SP	HINGE SCREWD=6 H=10.2	1
36	10208-780	螺柱	B1506-352-000	TENSION SPRING RACK B	1
37	10142-780	螺母 3/16-28	NS-6120310-SP	NUT 3/16-28	1
38	10207-780	垫圈 7.4*11.8*0.5	WP-0740516-SP	WASHER 7.4×11.8×0.5	1
39	-1900	油盘组件		OIL PAN ASM	1
40		油盘		OIL PAN	1
41		油盘油绳		OIL WICK	1
42		支撑橡胶垫		FRAME SUPPORT RUBBER	2
43		油盘固定螺丝D=3.8 L=20		SCREWD=3.8 L=20	4
44		油盘橡胶塞		RUBBER PLUG	2